11-01-112
EN-0101

Eaton®

VIS (Valve-In-Star) Hydraulic Motors

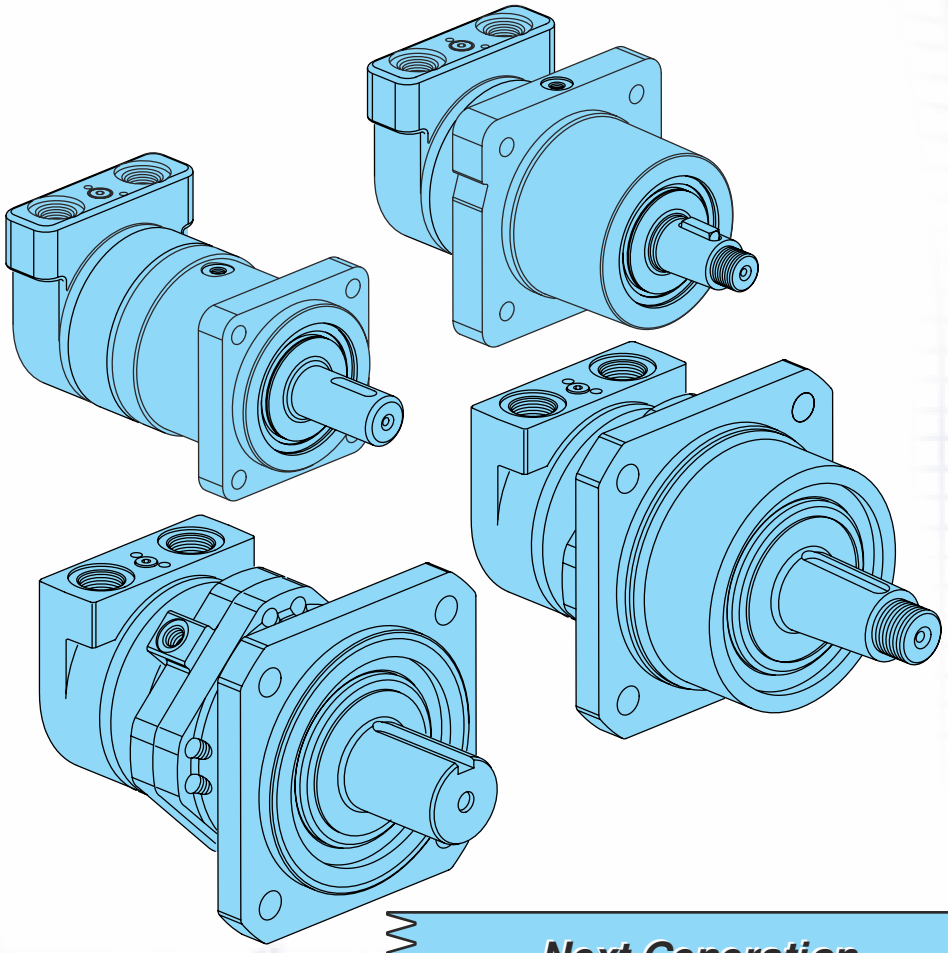

Next Generation
• Improved Performance

VIS 30, VIS 40 and VIS 45 Series Hydraulic Motors

Hydraulics

hydraulics

We Manufacture

Solutions

Solutions

Eaton Next Generation VIS Series Motors in this Catalog

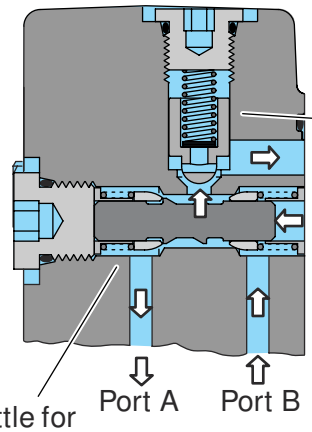

Closed Loop
Back-Pressure (Charge)
Relief Valve

Rigidity of Geroler® is Increased by 50%

Larger Rolls and Improved Star
Geometry for Lower Geroler
Contact and Stress

Patented Shuttle for
Increased Drive
Spline Lubrication

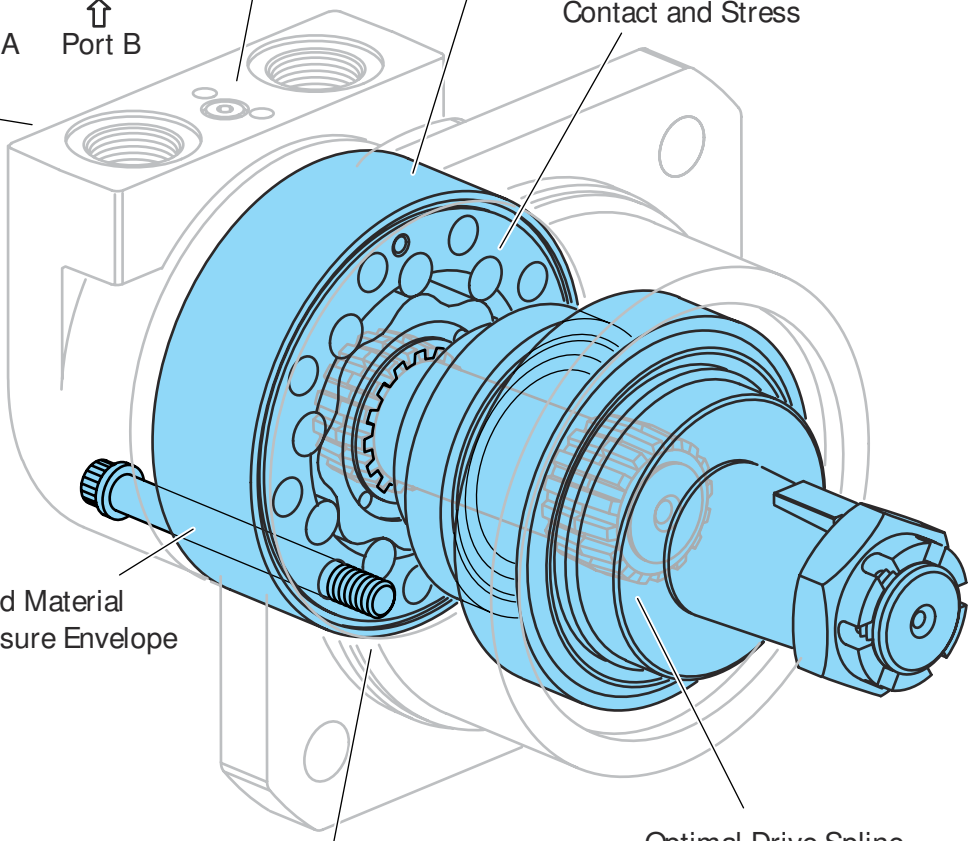

Larger Bolts and Increased Material
Properties for Stiffer Pressure Envelope

Optimal Drive Spline
and Shank Design

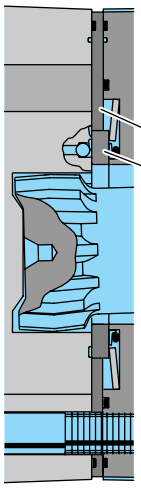

Two Piece Pre-Loaded Balance Plate
for Better Starting Efficiency and Higher
Back (Return) Pressure Capacity

Product Description

The VIS (Valve-in-Star) Motors are the next step in the evolution of the low speed high torque (LSHT) hydraulic motors. The VIS design provides inherent improvements over other types of LSHT hydraulic motor valving which results in a more compact package with better efficiency and higher pressure capability. These improvements have shown significant packaging and performance advantages in applications such as skid steer loaders, mini excavators, trenchers and logging equipment.

VIS motors are primarily intended for use in closed loop circuit applications. Consult your Eaton representative for assistance on open loop circuit applications.

Key Features

- **Very Compact Package**
- **Higher Output Torque**
- **Improved Efficiency**
- **Durable Design and Construction**
- **Quiet and Smooth Operation**
- **Shuttle Valve for Reliable Drive Lubrication**
- **Rating Compatible with Medium Duty Pumps**
- **Patented Technology**

Optional Features

- **SAE or BSP Ports Sizes**
- **VIS 30 and VIS 40 — SAE and ISO Style Mountings**
- **Many Output Shaft Configurations**
- **Back-Pressure Relief Valves**

Applications

- **Skid Steer Loaders**
- **Mini Excavators**
- **Trenchers**
- **Augers**
- **Logging Equipment**
- **Ag Combines**
- **Road Rollers**

Get the VISible Performance Advantage for Your Application

Design Features

Eaton hydraulic motors provide design flexibility. All VIS motors are available with various configurations consisting of:

- Displacement (Geroler® — size)
- Output Shaft
- No Shaft/Bearing Assembly (Bearingless Motor)
- Port Configuration
- Mounting Flange
- Other Special Features

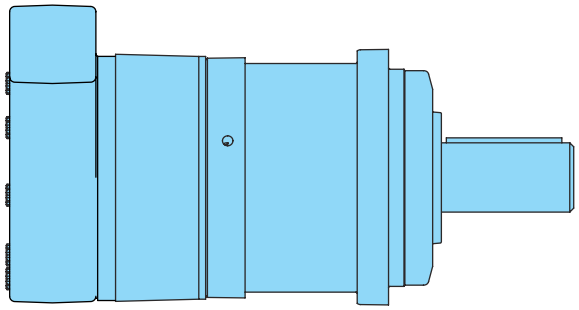

Standard Motor

The standard motor mounting flange is located as close to the output shaft as possible. This type of mounting supports the motor close to the shaft load. This mounting flange is also compatible with many standard gear boxes.

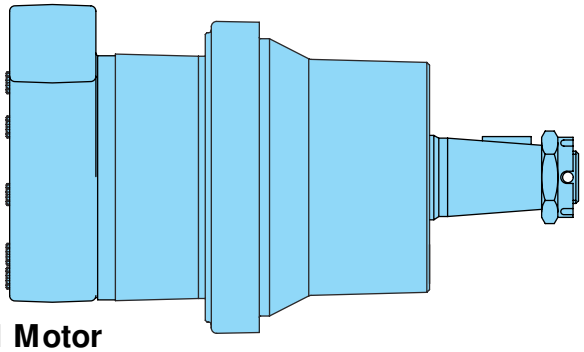

Wheel Motor

The wheel motor mounting flange is located near the center of the motor which permits part or all of the motor to be located inside the wheel or roller hub. In traction drive applications, loads can be positioned over the motor bearings for best bearing life. This wheel motor mounting flange provides design flexibility in many applications.

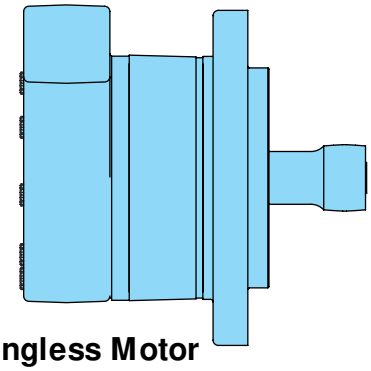

Bearingless Motor

This bearingless motor has the same drive components as the standard and wheel motors (with the exception that the motor is assembled without the output shaft, bearings and bearing housing). The bearingless motor is especially suited for applications such as gear boxes, winch drives, reel and roll drives. Bearingless motor applications must be designed with a bearing supported internal spline to mate with the bearingless motor drive. Product designs using these hydraulic motors provide considerable cost savings.

VIS 30, VIS 40 and VIS 45

LSHT Hydraulic Motors

Contents

General Information

Description, Features, Options, and Applications ..... Page 3
Product Overview VIS 30 Series Motors 5
Product Overview VIS 40 Series Motors 6
Product Overview VIS 45 Series Motors 7
Hydraulic Circuit Explanation 8- 9

Product Information — VIS 30 Motors

Specifications 10
Performance Data 11-13
Dimensions — Standard and Wheel Mount (SAE) 14
Dimensions — Standard and Wheel Mount (ISO) 15
Dimensions — Bearingless 16
Installation Information — Bearingless Motor 17
Dimensions — Shafts, Standard and Wheel (SAE) 18
Shaft Side Load — Standard and Wheel (SAE) 19
Dimensions — Shafts, Standard and Wheel (ISO) 20
Shaft Side Load — Standard and Wheel (ISO) 21
Product Numbers (Closed Loop System) 22
Product Numbers (Open Loop System) 23
Model Code 24

Product Information — VIS 40 Motors

Specifications 25
Performance Data 26-28
Dimensions — Standard and Wheel Mount (SAE) 29
Dimensions — Standard and Code C Mount 30
Dimensions — Standard and Wheel Mount (ISO) 31
Dimensions — Bearingless 32
Installation Information — Bearingless Motor 33
Dimensions — Shafts, Standard and Wheel (SAE) 34
Shaft Side Load — Standard and Wheel (SAE) 35
Dimensions — Shafts, Standard Code C Mount 36
Shaft Side Load — Standard Code C Mount 37
Dimensions — Shafts, Standard and Wheel (ISO) 38
Shaft Side Load — Standard and Wheel (ISO) 39
Model Code 40

Product Information — VIS 45 Motors

Specifications 41
Performance Data 42-44
Dimensions — Standard Mount 45
Dimensions — Wheel Mount 46
Dimensions — Bearingless 47
Installation Information — Bearingless Motor 48
Dimensions — Shafts, Standard and Wheel 49-50
Shaft Side Load — Standard and Wheel 51
Dimensions — Ports, Std, Whl and Brgl 52
Product Numbers (Closed Loop System) 53
Product Numbers (Open Loop System) 54
Model Code 55

VIS 30 Series

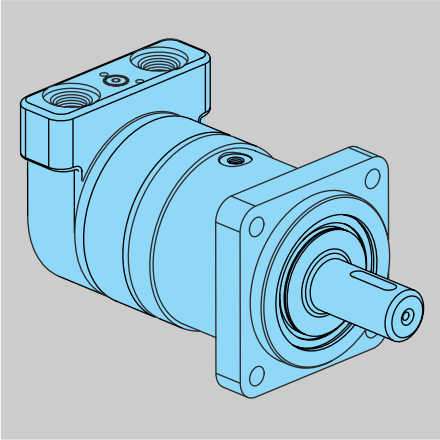

VIS 30

VIS 30 Motors

Geroler® Element ..... 4 Displacements
Flow l/min [GPM] ..... 114 [30] Continuous***
132 [35] Intermittent**
Speed (Theo.) ..... Up to 408 RPM
Pressure bar [PSI] ... 310 [4500] Cont.***
345 [5000] Inter.**
380 [5500] Peak.*
Torque Nm [lb-in]
(Theo.) ..... 1632 [14440] Cont.***
2034 [18000] Inter.**

VIS 30 Motor Displacement Size = cubic centimeter per shaft revolution (cm^3/r)
= cubic inch per shaft revolution ([in^3/r])

- 325 [19.8]
- 400 [24.4]
- 505 [30.7]
- 570 [34.9]

Mounting Flange

- 4 Bolt (Bearingless) 127,00 [5.000] Pilot Dia. and 14,35 [.565] Dia. Mounting Holes 161,92 [6.375] Dia. B.C.
- 4 Bolt (Standard – SAE) 127,00 [5.000] Pilot Dia. and 14,32 [.564] Dia. Mounting Holes on 161,92 [6.375] Dia. B.C.
- 4 Bolt (Standard – ISO) 125,00 [4.920] Pilot Dia. and 14,00 [.551] Dia. Mounting Holes on 160,00 [6.299] Dia. B.C.
- 4 Bolt (Wheel – SAE) 139,65 [5.500] Pilot Dia. and 14,32 [.564] Dia. Mounting Holes on 184,15 [7.250] Dia. B.C.
- 4 Bolt (Wheel – ISO) 160,00 [6.300] Pilot Dia. and 18,00 [.709] Dia. Mounting Holes on 200,00 [7.874] Dia. B.C.

Output Shaft

- Bearingless
- 40mm Dia. Straight (SAE) with Straight Key, M12 x 1,75 Threaded hole and 74,7 [2.94] Max. Coupling Engagement
- 40mm Dia. Straight (ISO) with Straight Key, M12 x 1,75 Threaded hole and 76,4 [3.01] Max. Coupling Engagement
- 1–3/4 inch Dia. Tapered with Straight and 1–1/4-18 UNEF Slotted Hex Nut
- 45mm Dia. Tapered with Straight and M30 x 2-6H Slotted Hex Nut
- 1–1/2 inch Dia. Splined 17T with 39,1 [1.54] Full Spline Length and 3/8-16 UNF-2B Threaded Hole
- 38,1 mm Dia. Splined 17T with 56,6 [2.23] Full Spline Length and M12 x 1.75 Threaded Hole

Port Type

- 1–1/16-12 UN-2B SAE O-ring Port with 9/16-18 UNF 2B SAE O-ring Case Drain Port
- G 3/4 (BSP) Straight Thread with G 1/4 (BSP)Straight Thread Case Drain Port

*** Continuous— (Cont.) Continuous rating, motor may be run continuously at these ratings.

** Intermittent— (Inter.) Intermittent operation, 10% of every minute.

* Peak— (Peak) Peak operation, 1% of every minute.

VIS 40 Series

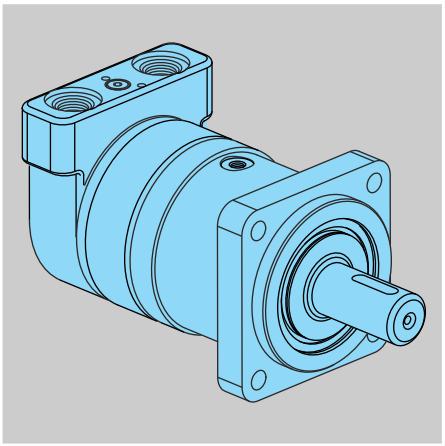

VIS 40

VIS 40 Motors

Geroler® Element ..... 6 Displacements
Flow l/min [GPM] ..... 114 [30] Continuous*
132 [35] Intermittent**
Speed (Theo.) ..... Up to 263 RPM
Pressure bar [PSI] ... 310 [4500] Cont.*
345 [5000] Inter.**
379 [5500] Peak.*
Torque Nm [lb-in]
(Theo.) ..... 2714 [24025] Cont.*
3392 [30025] Inter.**

VIS 40 Motor Displacement Size = cubic centimeter per shaft revolution (cm^3/r)
= cubic inch per shaft revolution ([in^3/r])

- 505 [30.7]
- 570 [34.9]
- 630 [38.5]
- 685 [41.7]
- 785 [48.0]
- 940 [57.4]

Mounting Flange

- 4 Bolt (Bearingless) 127,00 [5.000] Pilot Dia. and 14,35 [.565] Dia. Mounting Holes 161,92 [6.375] Dia. B.C.
- 4 Bolt (Standard – SAE) 127,00 [5.000] Pilot Dia. and 14,32 [.564] Dia. Mounting Holes on 161,92 [6.375] Dia. B.C.
- 4 Bolt (Standard – ISO) 125,00 [4.920] Pilot Dia. and 14,00 [.551] Dia. Mounting Holes on 160,00 [6.299] Dia. B.C.
- 4 Bolt (Wheel – SAE) 139,65 [5.500] Pilot Dia. and 14,32 [.564] Dia. Mounting Holes on 184,15 [7.250] Dia. B.C.
- 4 Bolt (Wheel – ISO) 160,00 [6.300] Pilot Dia. and 18,00 [.709] Dia. Mounting Holes on 200,00 [7.874] Dia. B.C.
- 4 Bolt (Oversize Flange) 185,4 [7.30] Rear Pilot Dia., 169,90 [6.689], 139,93 [5.509], 127,0 [5.00] Dia. (Front Pilots) and 18,01 [.709] Dia. Mounting Holes on 224,00 [8.819] Dia. B.C.

Output Shaft

- Bearingless
- 40mm Dia. Straight (SAE) with Straight Key, M12 x 1,75 Threaded hole and 74,7 [2.94] Max. Coupling Engagement
- 40mm Dia. Straight (ISO) with Straight Key, M12 x 1,75 Threaded hole and 76,4 [3.01] Max. Coupling Engagement
- 1–3/4 inch Dia. Tapered with Straight and 1–1/4-18 UNEF Slotted Hex Nut
- 45mm Dia. Tapered with Straight and M30 x 2-6H Slotted Hex Nut
- 1–1/2 inch Dia. Splined 17T with 39,1 [1.54] Full Spline Length and 3/8-16 UNF-2B Threaded Hole
- 38,1 mm Dia. Splined 17T with 56,6 [2.23] Full Spline Length and M12 x 1.75 Threaded Hole

Port Type

- 1–1/16-12 UN-2B SAE O-ring Port with 9/16-18 UNF 2B SAE O-ring Case Drain Port
- G 3/4 (BSP) Straight Thread with G 1/4 (BSP)Straight Thread Case Drain Port

*** Continuous— (Cont.) Continuous rating, motor may be run continuously at these ratings.

** Intermittent— (Inter.) Intermittent operation, 10% of every minute.

* Peak— (Peak) Peak operation, 1% of every minute.

VIS 45 Series

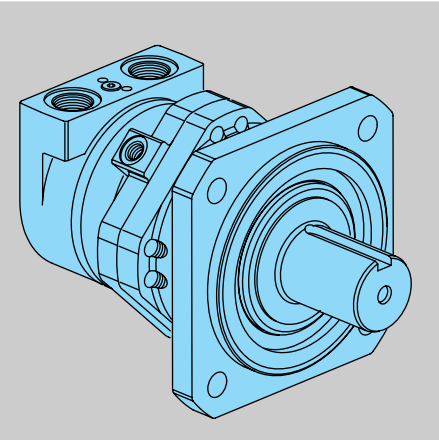

VIS 45

VIS 45 Motors

Geroler® Element..... 5 Displacements
Flow l/min [GPM]..... 170 [45] Continuous*
189 [50] Intermittent**
Speed (Theo.)..... Up to 299 RPM
Pressure bar [PSI] ... 310 [4500] Cont.*
345 [5000] Inter.**
379 [5500] Peak*
Torque Nm [lb-in]
(Theo.)..... 4068 [36010] Cont.*
5086 [45015] Inter.**

VIS 45 Motor Displacement Size = cubic centimeter per shaft revolution (cm^3/r)

- 630 [38.6] **= cubic inch per shaft revolution ([in^3/r])**
- 805 [48.6]
- 990 [60.5]
- 1245 [76.0]
- 1560 [95.0]

Mounting Flange

- 4 Bolt (Brgl.) 158,70 [6.250] Pilot Dia. and 17,53 [.690] Dia. Mounting Holes on 190,50 [7.500] Dia. B.C.
- 8 Bolt (Brgl.) 158,70 [6.250] Pilot Dia. and 15,88 [.625] Dia. Mounting Holes on 190,50 [7.500] Dia. B.C.
- 4 Bolt (Whl.) 200,0 [7.87] Pilot Dia. and 20,6 [.81] Dia. Mtg. Holes on 250,0 [9.84] Dia. B.C.
- 4 Bolt (Std.) 200,0 [7.87] Pilot Dia. and 20,6 [.81] Dia. Mtg. Holes on 250,0 [9.84] Dia. B.C.

Output Shaft

- Bearingless
- 2–5/8 inch Dia. Straight with Straight Key, 5/8-18 UNF - 2B Threaded Hole
- 60mm Dia. Tapered (10:1 Taper per ISO R775) with Straight Key and M42 x 3 -6H Slotted Hex Nut
- 70mm Dia. Splined 22T with 45,7 [1.80] Min. Full Spline Length and M16 x 1,5 Threaded Hole
- 2–3/4 inch Dia. Splined 32T with 52,07 [2.050] Min. Full Spline Length and 5/8-18 UNF - 2B Threaded Hole

Port Type

- 1–5/16-12 UN SAE O-ring Port with 9/16-18 UNC SAE O-ring Case Drain Port
- G 1 (BSP) Straight Thread Port with G 1/4 (BSP) Straight Thread Case Drain Port

*** Continuous— (Cont.) Continuous rating, motor may be run continuously at these ratings.

** Intermittent— (Inter.) Intermittent operation, 10% of every minute.

* Peak— (Peak) Peak operation, 1% of every minute.

Typical (Closed Loop) Hydraulic Circuit
VIS 30, 40 and 45 Series

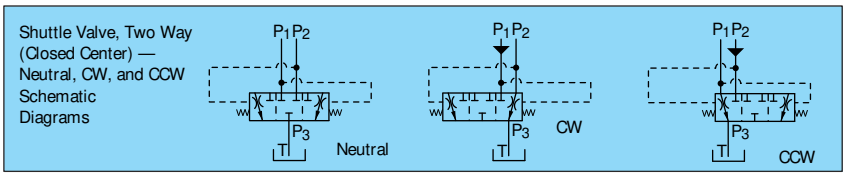

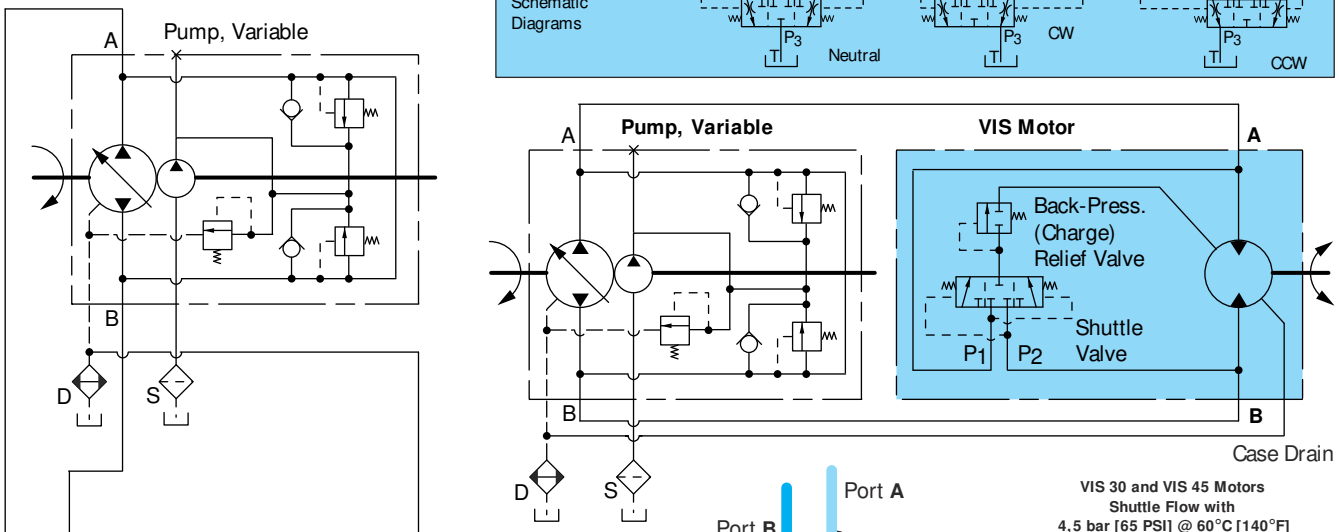

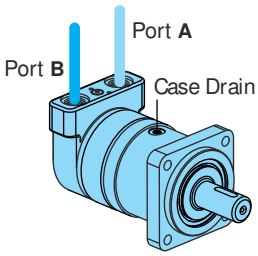

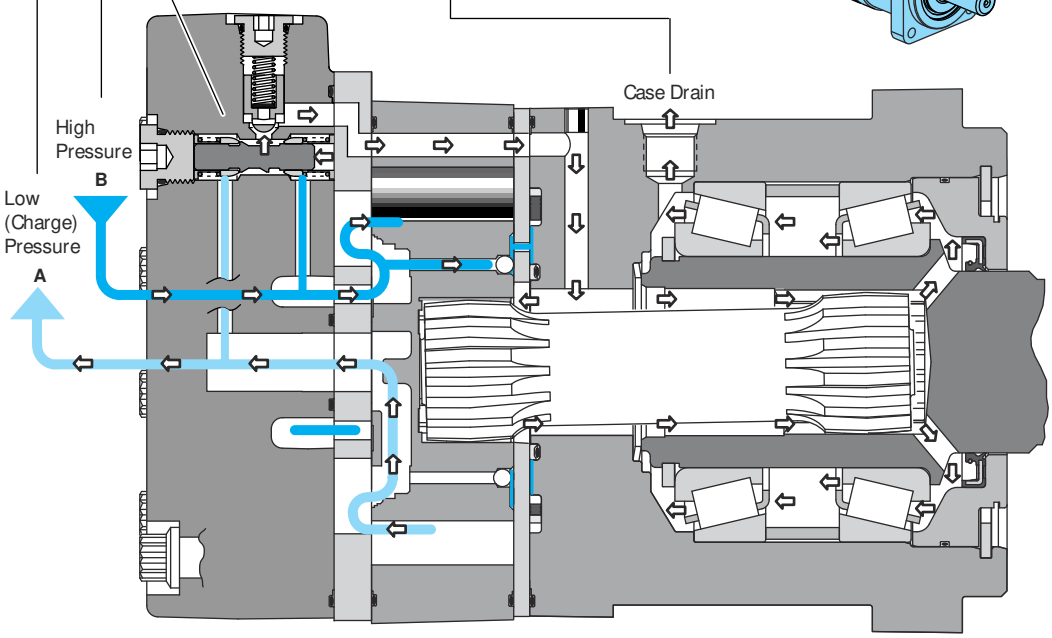

VIS 30 and VIS 45 Motors
Shuttle Flow with
4,5 bar [65 PSI] @ 60°C [140°F]
Δ Between Back-Pressure and
Case Pressure (Typical Data)
Due to Machining Tolerances, Flow May be More or Less

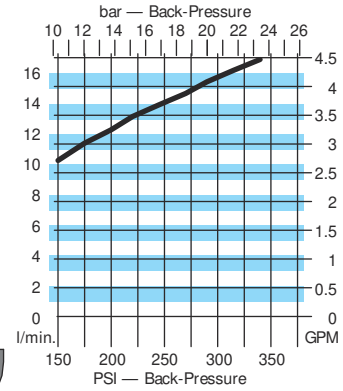

VIS 30 and VIS 45 Motors
Shuttle Flow with
15,2 bar [220 PSI] @ 60°C [140°F]
Δ Between Back-Pressure and
Case Pressure (Typical Data)
Due to Machining Tolerances, Flow May be More or Less

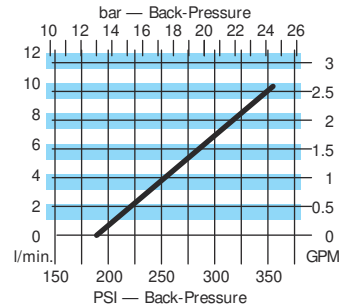

Low Speed High Torque Hydraulic Motors
with Shuttle — Patent No. U.S. 4,645,438

Note: VIS motors applied in closed loop circuit applications, must have a case drain line to tank, without this drain line the internal drive spline will not have adequate lubrication. VIS motors are not recommended for series circuit application.

Typical (Open Loop) Hydraulic Circuit
VIS 30, 40 and 45 Series

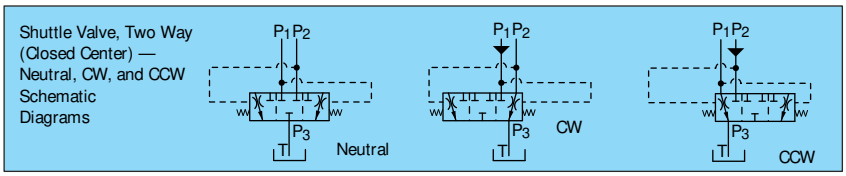

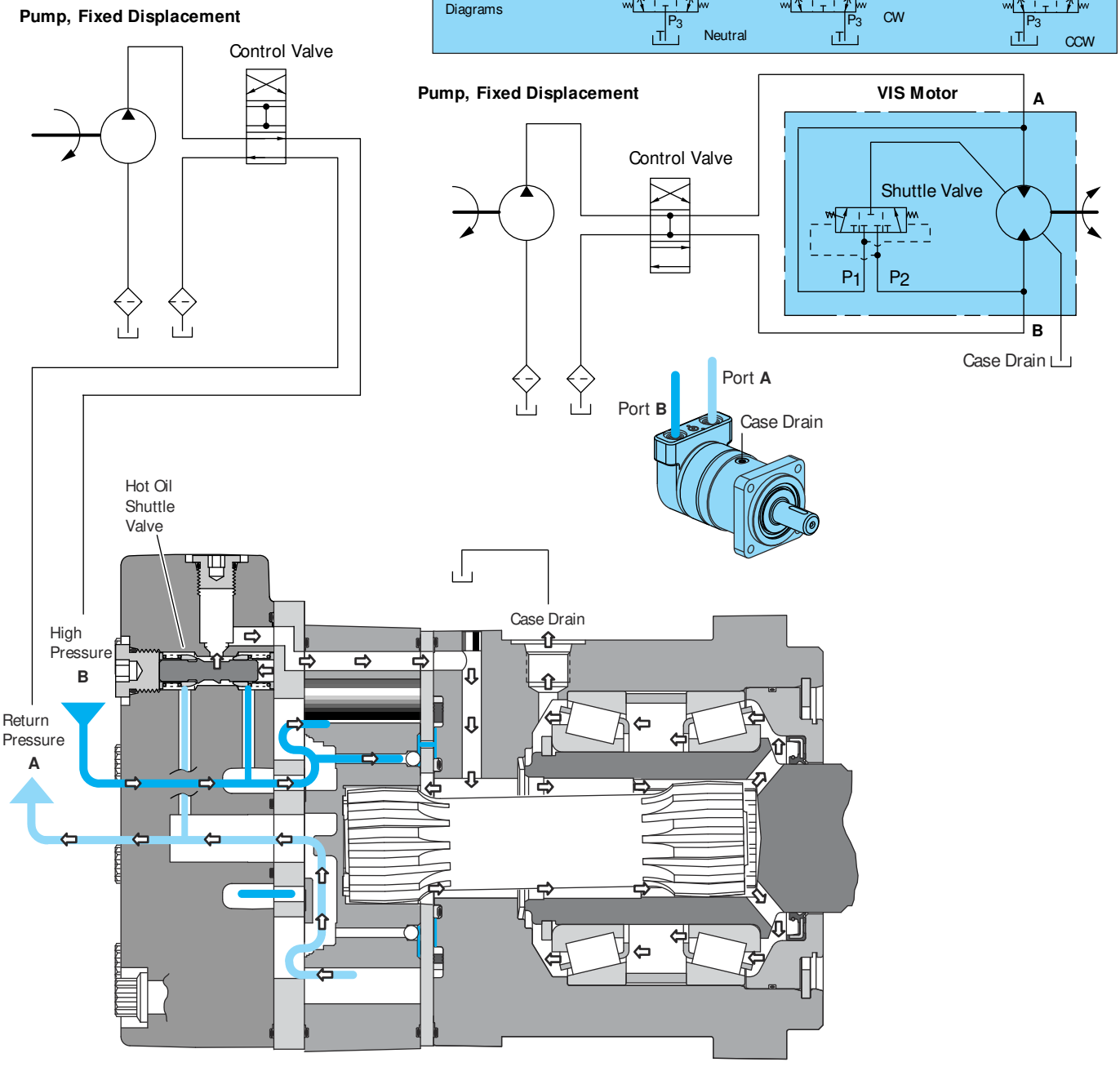

Low Speed High Torque Hydraulic Motors
with Shuttle — Patent No. U.S. 4,645,438

Note: VIS motors applied in open loop circuit require 3,5 bar [50 PSI] minimum back (return) pressure over the case pressure to properly lubricate the internal drive. VIS motors must have a case drain line to tank. VIS motors are not recommended for series circuit application.

Specifications
VIS 30 Series

VIS 30

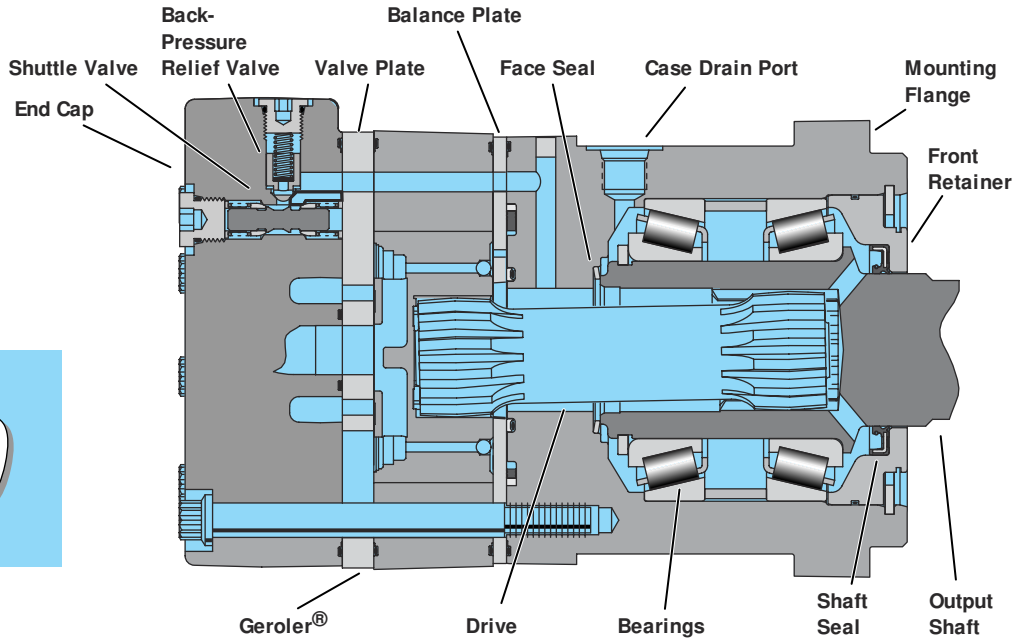

Theoretical Specification Data — VIS 30 Motors
(for Efficiency Corrected Data see Performance Charts)

Displ. cm³/r [in³/r]		325 [19.8]	400 [24.4]	505 [30.7]	570 [34.9]
Theo. Max. Speed (RPM) @ ..... Flow	Continuous	350	284	226	199
	Intermittent	408	331	263	231
Flow l/min [GPM]	Continuous	114 [30]	114 [30]	114 [30]	114 [30]
	Intermittent	132 [35]	132 [35]	132 [35]	132 [35]
Theo. Torque Nm [lb-in]	Continuous	1602 [14180]	1624 [14370]	1629 [14415]	1632 [14440]
	Intermittent	1780 [15750]	2034 [18000]	2034 [18000]	2034 [18000]
Pressure Δ bar [Δ PSI]	Continuous	310 [4500]	255 [3700]	203 [2950]	179 [2600]
	Intermittent	345 [5000]	320 [4635]	254 [3685]	223 [3240]
	Peak	380 [5500]	380 [5500]	305 [4420]	268 [3890]

A simultaneous maximum torque and maximum speed NOT recommended.

Maximum Inlet Pressure — 400 bar [5800 PSI]. **Do Not Exceed A Pressure Rating** (for displacement size see chart above).

Return Pressure (Back-Pressure):

Minimum — 3,5 bar [50 PSI]

Maximum — 21 bar [300 PSI]

Note — Return (back-pressure) must be 3,5 bar [50 PSI] greater than the case pressure.

Case Pressure:

Minimum — No Pressure

Maximum — 3,5 bar [50 PSI]

Note — The case must be full when the motor is operating (case drain out the top). A case drain is required.

Δ Pressure — The true Δ bar [Δ PSI] between inlet port and outlet port.

Continuous Rating — Motor may be run continuously at these ratings.

Intermittent Operation — 10% of every minute.

Peak Operation — 1% of every minute.

Recommended Fluids — Premium quality, anti-wear type hydraulic oil with a viscosity of not less than 70 SUS at operating temperature.

Recommended Maximum System Operating Temp. — Is 82° C [180° F]

Recommended Filtration — per ISO Cleanliness Code, level 18/13

Shuttle — Standard

Back-Pressure Relief Valve — Required for closed loop circuit.

To assure best motor life, run motor for approximately one hour at 30% of rated pressure before application to full load. Be sure motor is filled with fluid prior to any load applications.

Performance Data
VIS 30 Series

Motors run with high efficiency in all areas designated with a number for torque and speed, *however for best motor life select a motor to run with a torque and speed range printed in the white background area.*

Continuous

Intermittent

VIS 30 - 325 cm3/r [19.8 in3/r]

Δ Pressure

PSI

bar

Flow GPM l/min	250 **15**	500 **35**	1000 **70**	1500 **105**	2000 **140**	2500 **170**	3000 **205**	3500 **240**	4000 **275**	4500 **310**	5000 **345**
4	530	1300	2680	4050	5380	6660	8080	9390	11050	13030	13270
	60	*147*	*303*	*458*	*608*	*753*	*913*	*1061*	*1249*	*1472*	*1500*
15	**46**	**46**	**45**	**44**	**43**	**43**	**42**	**41**	**39**	**37**	**35**
8	580	1310	2710	4060	5470	6820	8180	9410	11150	13220	13330
	66	*148*	*306*	*459*	*618*	*771*	*924*	*1063*	*1260*	*1494*	*1506*
30	**93**	**92**	**90**	**88**	**85**	**84**	**83**	**82**	**78**	**73**	**70**
12	630	1400	2730	4090	5400	6780	7960	9180	10430	11580	12710
	71	*158*	*308*	*462*	*610*	*766*	*899*	*1037*	*1179*	*1309*	*1436*
45	**139**	**135**	**133**	**131**	**128**	**128**	**127**	**125**	**124**	**124**	**122**
16	790	1490	2660	4020	5370	6740	8130	9240	10480	11980	12500
	89	*168*	*301*	*454*	*607*	*762*	*919*	*1044*	*1184*	*1354*	*1413*
61	**186**	**183**	**180**	**177**	**172**	**169**	**166**	**166**	**165**	**159**	**159**
20	790	1430	2630	3980	5310	6730	8120	9230	10450	11940	
	89	*162*	*297*	*450*	*600*	*760*	*918*	*1043*	*1181*	*1349*	
76	**233**	**229**	**225**	**221**	**215**	**212**	**208**	**208**	**207**	**201**	
25	740	1410	2560	3890	5180	6660	7840	9200	10430		
	84	*159*	*289*	*440*	*585*	*753*	*886*	*1040*	*1179*		
95	**291**	**286**	**282**	**279**	**276**	**268**	**263**	**261**	**259**		
30		1390	2510	3840	5170	6570	8030	9190	10420		
		157	*284*	*434*	*584*	*742*	*907*	*1038*	*1177*		
114		**343**	**338**	**334**	**331**	**321**	**315**	**312**	**311**		
35		1370	2500	3830	5140	6530	8000	9180			
		155	*283*	*433*	*581*	*738*	*904*	*1037*			
132		**400**	**394**	**391**	**386**	**375**	**367**	**365**			

9180	Torque [lb-in]
1037	*Torque (Nm)*
365	**Speed (RPM)**

Performance data is typical at 120 SUS. Actual data may vary slightly from unit to unit in production

Performance Data
VIS 30 Series

Motors run with high efficiency in all areas designated with a number for torque and speed, *however for best motor life select a motor to run with a torque and speed range printed in the white background area.*

Continuous

Intermittent

VIS 30 - 400 cm3/r [24.4 in3/r]

Δ Pressure

PSI

bar

Flow GPM / l/min	250 / **15**	500 / **35**	1000 / **70**	1500 / **105**	2000 / **140**	2500 / **170**	3000 / **205**	3500 / **240**	4000 / **275**	4500 / **310**	5000 / **345**
4	730	1590	3280	4900	6570	8030	9780	11180	12800	14340	15600
	82	*180*	*371*	*554*	*742*	*907*	*1105*	*1263*	*1446*	*1620*	*1763*
15	**37**	**37**	**37**	**36**	**35**	**35**	**34**	**34**	**32**	**30**	**29**
8	780	1630	3360	4960	6730	8200	10130	11360	13020	14410	15780
	88	*184*	*380*	*560*	*760*	*927*	*1145*	*1284*	*1471*	*1628*	*1783*
30	**75**	**74**	**73**	**71**	**69**	**68**	**67**	**66**	**63**	**60**	**57**
12	790	1690	3340	5020	6770	8260	10280	11560	13270	14610	
	89	*191*	*377*	*567*	*765*	*933*	*1162*	*1306*	*1500*	*1651*	
45	**113**	**111**	**108**	**107**	**105**	**105**	**103**	**102**	**101**	**101**	
16	850	1750	3320	4970	6630	8260	10330	11510	13370	14630	
	96	*198*	*375*	*562*	*749*	*933*	*1167*	*1301*	*1511*	*1653*	
61	**151**	**149**	**147**	**145**	**141**	**138**	**136**	**136**	**135**	**131**	
20	810	1640	3310	4920	6490	8260	10370	11460	13470		
	92	*185*	*374*	*556*	*733*	*933*	*1172*	*1295*	*1522*		
76	**189**	**186**	**183**	**181**	**176**	**173**	**170**	**170**	**169**		
25	670	1560	3260	4900	6470	8210	10210	11370			
	76	*176*	*368*	*554*	*731*	*928*	*1154*	*1285*			
95	**236**	**233**	**230**	**227**	**225**	**218**	**214**	**212**			
30		1450	3210	4890	6450	8170	10050	11270			
		164	*363*	*553*	*729*	*923*	*1136*	*1274*			
114		**280**	**276**	**273**	**270**	**262**	**257**	**255**			
35		1410	3120	4880	6420	8170	9790	11240			
		159	*353*	*551*	*725*	*923*	*1106*	*1270*			
132		**326**	**321**	**318**	**314**	**305**	**302**	**298**			

11140	Torque [lb-in]
1270	*Torque (Nm)*
298	**Speed (RPM)**

VIS 30 - 505 cm3/r [30.7 in3/r]

Δ Pressure

PSI

bar

Flow GPM / l/min	250 / **15**	500 / **35**	1000 / **70**	1500 / **105**	2000 / **140**	2500 / **170**	3000 / **205**	3500 / **240**	4000 / **275**	4500 / **310**
4	990	2010	4130	6180	8260	10080	12050	13670	16180	18050
	112	*227*	*467*	*698*	*933*	*1139*	*1362*	*1545*	*1828*	*2040*
15	**29**	**29**	**28**	**28**	**27**	**27**	**26**	**26**	**24**	**23**
8	1050	2110	4350	6480	8720	10760	13040	14350	16450	
	119	*238*	*492*	*732*	*985*	*1216*	*1474*	*1622*	*1859*	
30	**60**	**59**	**58**	**56**	**55**	**55**	**54**	**53**	**53**	
12	1020	2120	4330	6580	8780	10830	13180	14640	16760	
	115	*240*	*489*	*744*	*992*	*1224*	*1489*	*1654*	*1894*	
45	**86**	**82**	**80**	**79**	**79**	**78**	**76**	**76**	**75**	
16	940	2130	4320	6510	8680	10810	13260	14740		
	106	*241*	*488*	*736*	*981*	*1222*	*1498*	*1666*		
61	**116**	**111**	**109**	**107**	**107**	**107**	**106**	**106**		
20	810	1950	4220	6400	8520	10750	13180	15170		
	92	*220*	*477*	*723*	*963*	*1215*	*1489*	*1714*		
76	**147**	**144**	**141**	**137**	**136**	**133**	**132**	**127**		
25	520	1800	4040	6220	8360	10630	12930	15350		
	59	*203*	*457*	*703*	*945*	*1201*	*1461*	*1735*		
95	**183**	**180**	**176**	**171**	**170**	**166**	**164**	**158**		
30		1530	3770	6020	8160	10400	12650	14240		
		173	*426*	*680*	*922*	*1175*	*1429*	*1609*		
114		**215**	**211**	**208**	**203**	**199**	**197**	**191**		
35			3510	5790	7900	10180	12300			
			397	*654*	*893*	*1150*	*1390*			
132			**246**	**243**	**236**	**233**	**231**			

12300	Torque [lb-in]
1390	*Torque (Nm)*
231	**Speed (RPM)**

Performance data is typical at 120 SUS. Actual data may vary slightly from unit to unit in production

Performance Data
VIS 30 Series

Motors run with high efficiency in all areas designated with a number for torque and speed, *however for best motor life select a motor to run with a torque and speed range printed in the white background area.*

Continuous

Intermittent

VIS 30 - 570 cm3/r [34.9 in3/r]

Δ Pressure
PSI
bar

Flow GPM l/min	250 **15**	500 **35**	1000 **70**	1500 **105**	2000 **140**	2500 **170**	3000 **205**	3250 **225**	3750 **260**
4 *136* **15**	1206 *136* **25**	2275 *257* **22**	4687 *529* **22**	7034 *795* **22**	9355 *1057* **21**	11404 *1288* **21**	13407 *1515* **20**	14658 *1656* **19**	16707 *1888* **19**
8 *141* **30**	1251 *141* **50**	2429 *274* **47**	5049 *570* **47**	7578 *856* **47**	10126 *1144* **46**	12627 *1427* **46**	15066 *1702* **45**	16389 *1852* **45**	18693 *2112* **45**
12 *134* **45**	1188 *134* **74**	2384 *269* **72**	5031 *568* **71**	7714 *872* **69**	10198 *1152* **69**	12700 *1435* **68**	15184 *1715* **67**	16734 *1891* **67**	19110 *2159* **67**
16 *105* **61**	934 *105* **100**	2339 *264* **98**	5031 *568* **97**	7624 *861* **95**	10153 *1147* **95**	12673 *1432* **94**	15293 *1728* **94**	16689 *1885* **93**	
20 *82* **76**	725 *82* **127**	2094 *237* **126**	4850 *548* **125**	7470 *844* **121**	9990 *1129* **120**	12537 *1416* **118**	15066 *1702* **117**	16616 *1877* **113**	
25 *44* **95**	390 *44* **161**	1867 *211* **158**	4505 *509* **156**	7080 *800* **154**	9699 *1097* **151**	12328 *1393* **147**	14721 *1663* **146**	14919 *1685* **138**	
30 *165* **114**		1459 *165* **188**	4025 *455* **186**	6690 *756* **185**	9282 *1049* **181**	11902 *1345* **177**	14341 *1620* **179**	14846 *1677* **163**	
35 **132**			3572 *404* **218**	6209 *702* **216**	8784 *992* **213**	11440 *1292* **207**			

11440	Torque [lb-in]
1292	*Torque (Nm)*
207	**Speed (RPM)**

Performance data is typical at 120 SUS. Actual data may vary slightly from unit to unit in production

Dimension — VIS 30 Series (Standard and Wheel Mount – SAE)

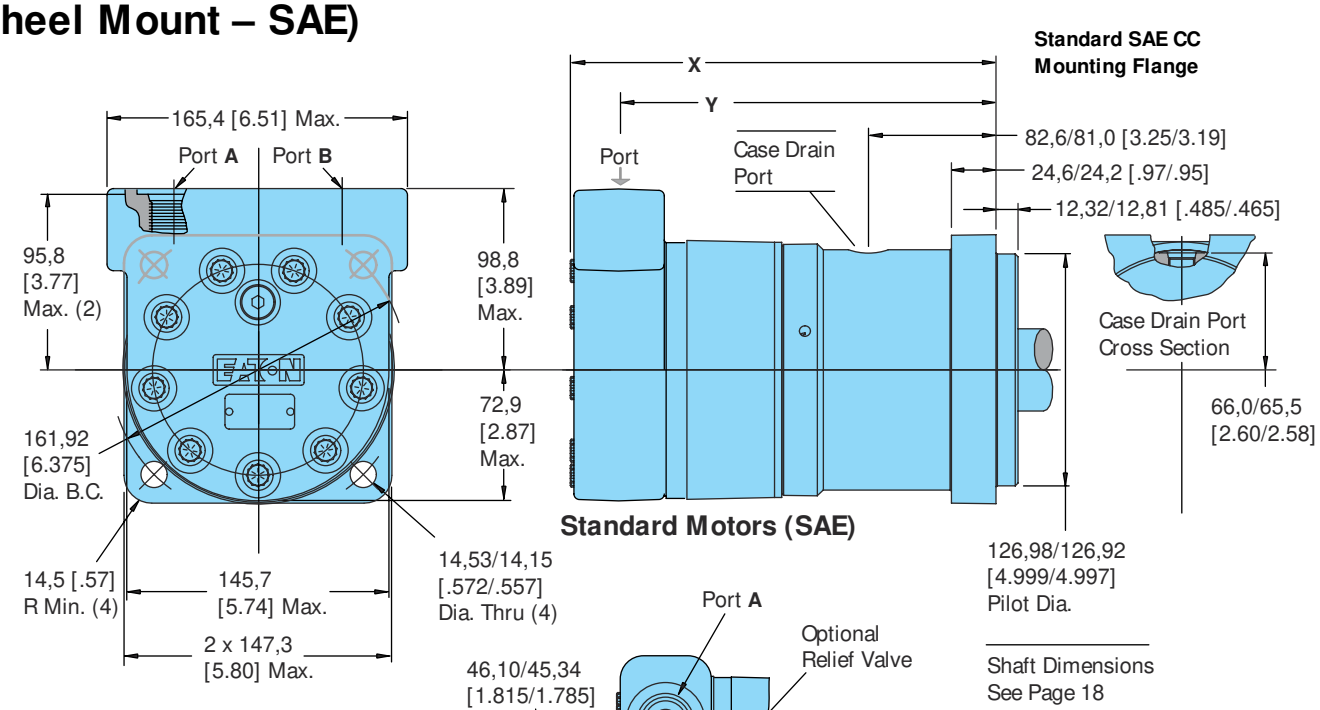

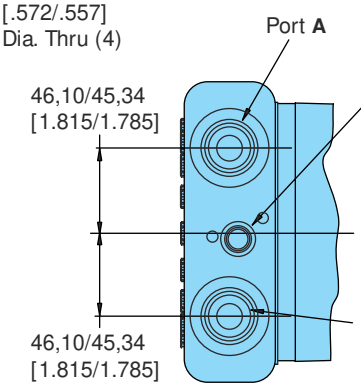

Standard Motors (SAE)

Displ. cm^3/r [in^3/r]	Y mm [inch]	X mm [inch]
325 [19.8]	188,7 [7.43]	214,7 [8.45]
400 [24.4]	195,6 [7.70]	221,3 [8.71]
505 [30.7]	204,5 [8.05]	230,4 [9.07]
570 [34.9]	210,6 [8,29]	236,5 [9.31]

Wheel Motors (SAE)

325 [19.8]	103,9 [4.09]	129,8 [5.11]
400 [24.4]	110,8 [4.36]	136,4 [5.37]
505 [30.7]	119,7 [4.71]	145,6 [5.73]
570 [34.9]	125,7 [4.95]	151,6 [5.97]

Ports

1–1/16-12 UN-2B SAE O-ring Ports (2)
9/16-18 UNF-2B SAE O-ring Case Drain Port (1)

Standard Rotation
Viewed from Shaft End
Port **A** Pressurized — CW
Port **B** Pressurized — CCW

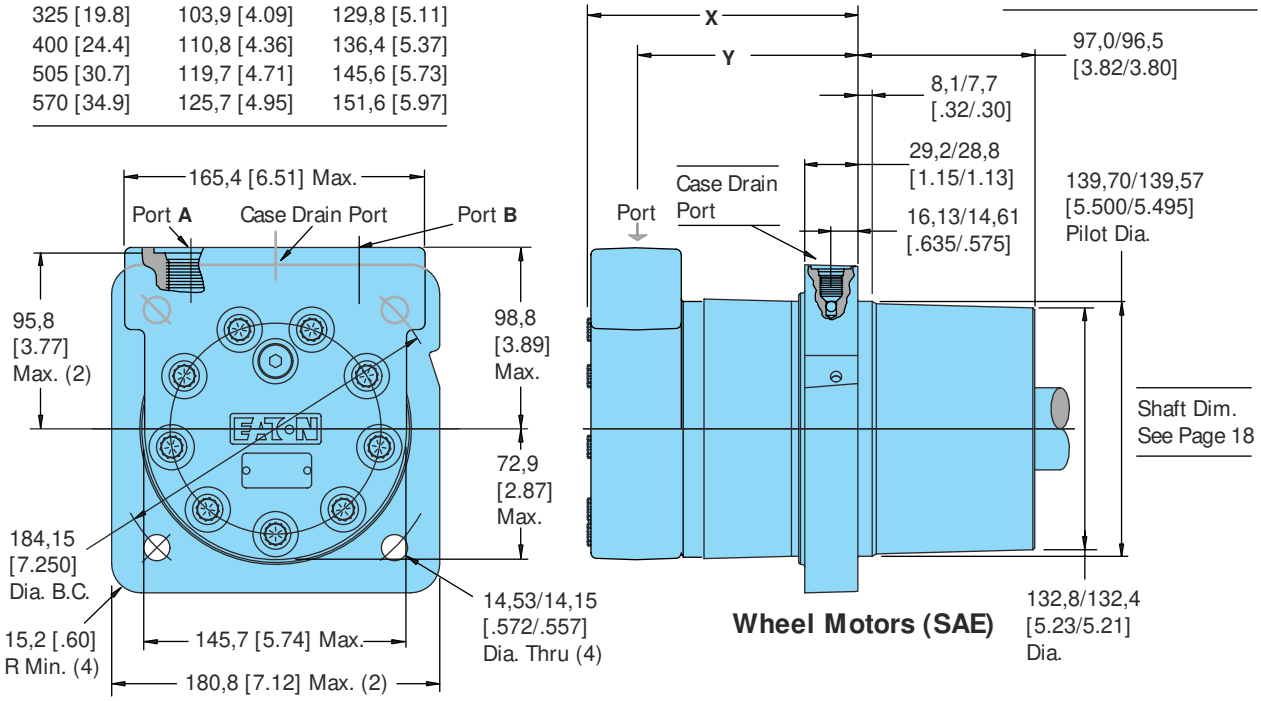

Dimension — VIS 30 Series (Standard and Wheel Mount – ISO)

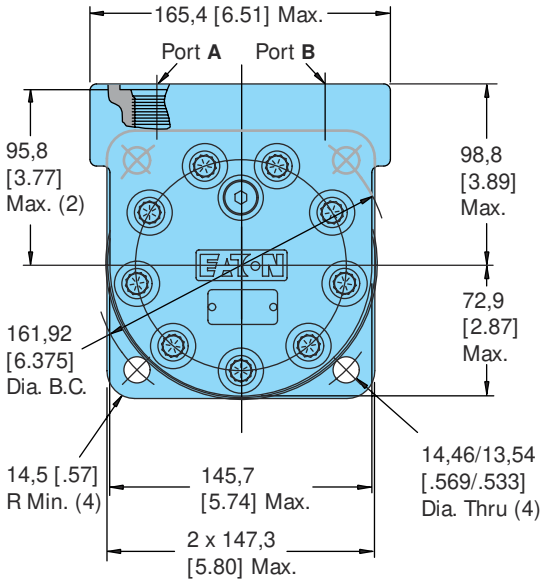

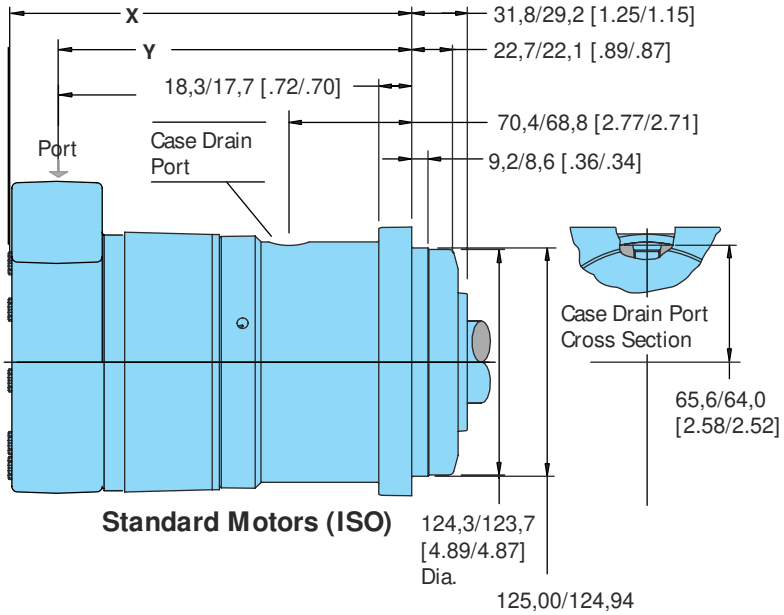

Standard Motors (ISO)

Shaft Dimensions
See Page 18

VIS 30 Standard Motor (ISO)

Displ. cm^3/r [in^3/r]	Y mm [inch]	X mm [inch]
325 [19.8]	176,8 [6.96]	202,7 [7.98]
400 [24.4]	183,4 [7.22]	209,0 [8.23]
505 [30.7]	192,5 [7.58]	218,4 [8.60]
570 [34.9]	198,6 [7.82]	224,5 [8.84]

VIS 30 Wheel Motor (ISO)

325 [19.8]	102,4 [4.03]	128,5 [5.06]
400 [24.4]	109,2 [4.30]	135,1 [5.32]
505 [30.7]	118,4 [4.66]	144,3 [5.68]
570 [34.9]	124,5 [4.90]	150,4 [5.92]

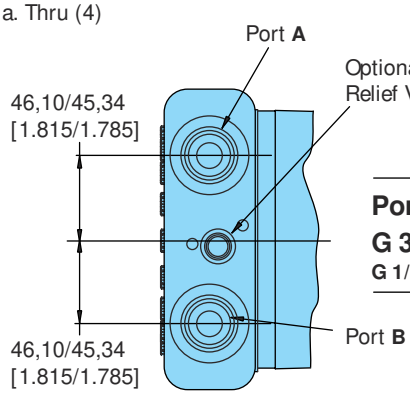

Ports

G 3/4 (BSP) O-ring Ports (2)

G 1/4 (BSP) O-ring Case Drain Port (1)

Standard Rotation
Viewed from Shaft End
Port **A** Pressurized — CW
Port **B** Pressurized — CCW

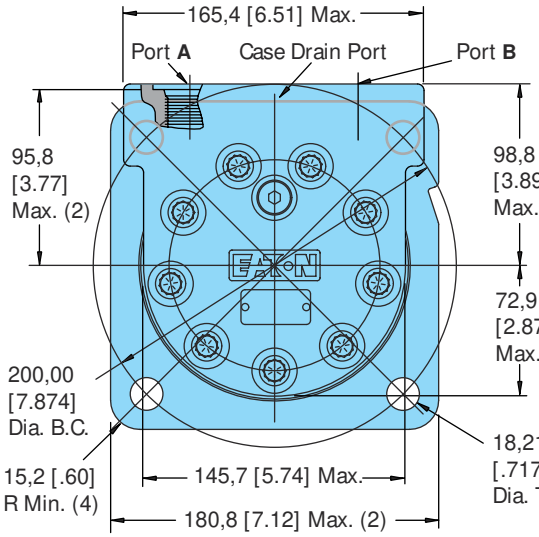

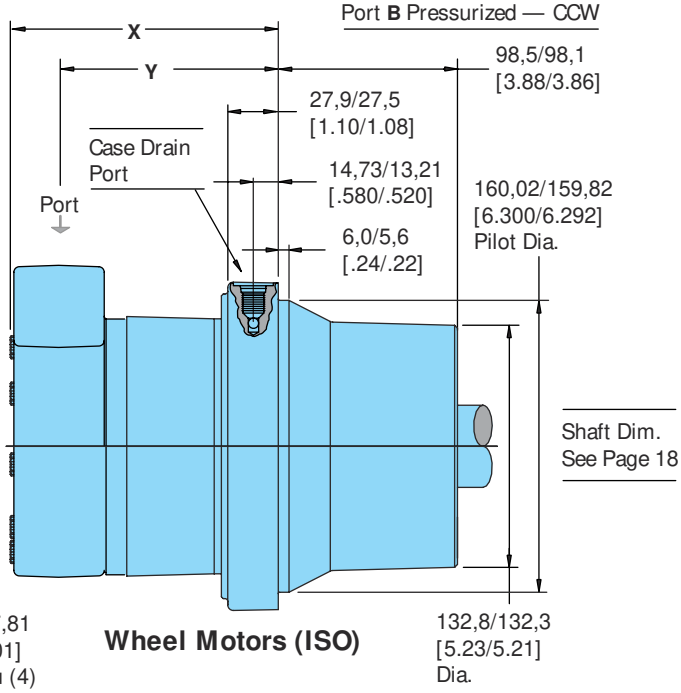

Wheel Motors (ISO)

Shaft Dim.
See Page 18

Dimensions — VIS 30 Series (Bearingless)

Ports

1–1/16-12 UN-2B SAE O-ring Ports (2)
9/16-18 UNF-2B SAE O-ring Case Drain Port (1)
or
G 3/4 (BSP) O-ring Ports (2)
G 1/4 (BSP) O-ring Case Drain Port (1)

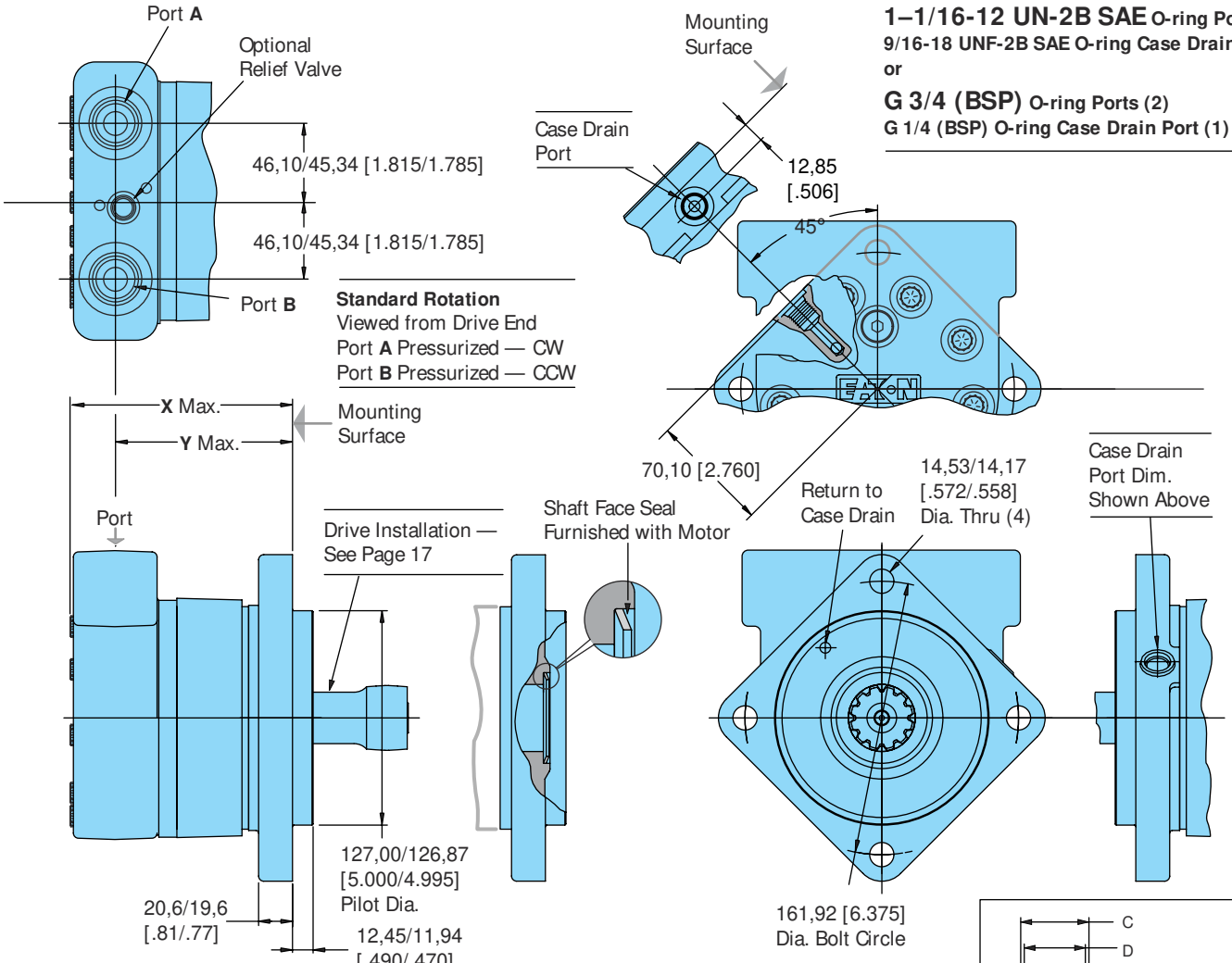

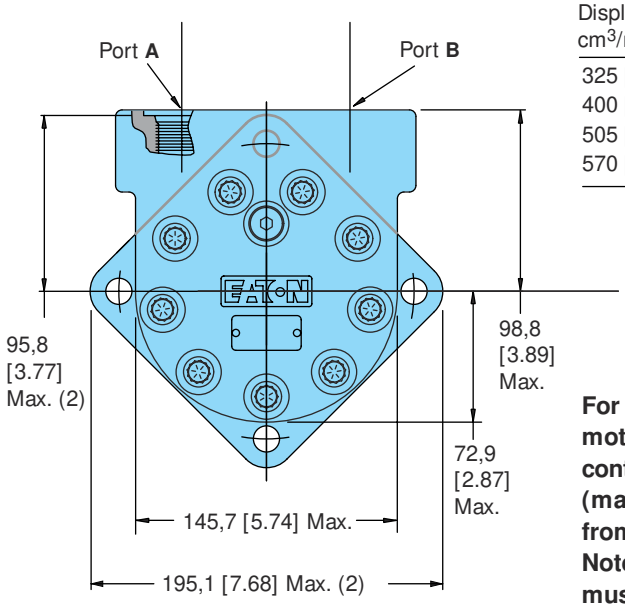

Displ. cm^3/r [in^3/r]	Y mm [inch]	X mm [inch]
325 [19.8]	113,3 [4.46]	139,2 [5.48]
400 [24.4]	120,1 [4.73]	145,8 [5.74]
505 [30.7]	129,0 [5.08]	154,9 [6.10]
570 [34.9]	135,1 [5.32]	161,0 [6.34]

For VIS 30 bearingless motor application information contact your Eaton representative (mating coupling blanks available from Eaton Hydraulics).
Note: After machining blank, part must be hardened per Eaton specification.

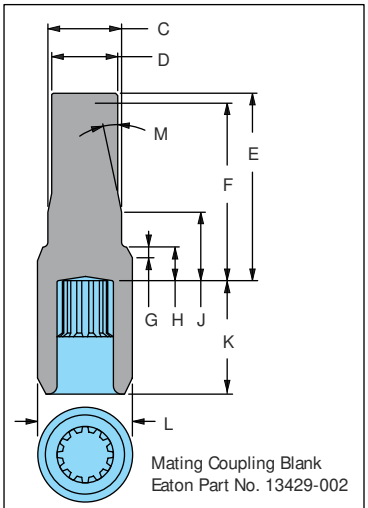

Mating Coupling Blank
Eaton Part No. 13429-002

C	52,8	[2.08] Dia.
D	49,0	[1.93] Dia.
E	111,5	[4.39] Max.
F	106,4	[4.19] Min. Full Form Dia.
G	7,87	[.310] Max.
H	17,27	[.680]
J	33,3	[1.31]
K	84,20	[3.315] Max. Full Form Dia.
L	69,6	[2.74]
M	15°	

Installation Information for Bearingless Motor — VIS 30 Series

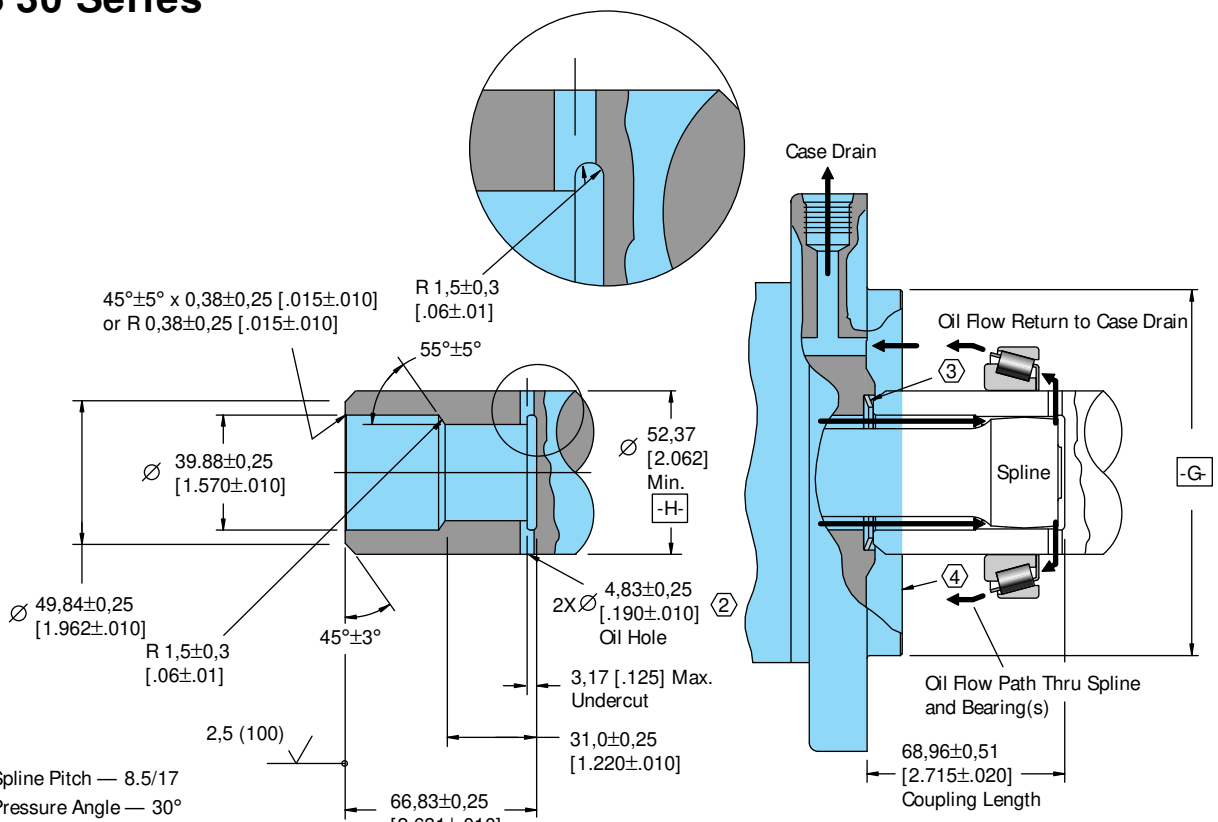

Spline Pitch — 8.5/17
Pressure Angle — 30°
Number of teeth — 12
Class of Fit — Ref. 5
Type of Fit — Side
Pitch Diameter — Ref. 35,858823 [1.4117647] ◎ 0,20 [.008] H
Base Diameter — Ref. 31,054652 [1.2226241]
Major Diameter — 39,17 [1.542] Max. 38,97 [1.534] Min.
Minor Diameter — 33,30 - 33,48 [1.311 - 1.318]
Form Diameter, Min. — 38,33 [1.509]
Fillet Radius — 0,64 - 0,76 [.025 - .030]
Tip Radius — 0,25 - 0,51 [.010 - .020]
Finish — 1,6 (63)
Involute Profile Variation — +0,000 -0,025 [+.0000 -.0010]
Total Index Variation — 0,038 [.0015]
Lead Variation — 0,013 [.0005]
Circular Space Width:
- Maximum Actual — 5,898 [.2322]
- Minimum Effective — 5,804 [.2285]
- Maximum Effective — Ref. 5,857 [.2306]
- Minimum Actual — Ref. 5,834 [.2297]

Dimension Between Two Pins — Ref. 26,929 - 27,084 [1.0602 - 1.0663]
Pin Diameter — 6,223 [.2450] Pins to Have 4,0 [.160] Wide Flat for Root Clearance

1 Internal spline in mating part to be per spline data. Specification material to be ASTM A304, 8620H carborize to a hardness of 60-64 HRc with case depth (to 50HRc) of 0,076 - 1,27 [.030 - .050]. Dimensions apply after heat treat.

(2) Mating part to have critical dimensions as shown. Oil holes must be provided and open for proper oil circulation.

(3) Seal to be furnished with motor for proper oil circulation thru splines.

(4) Similar to SAE "C" Four Bolt Flange.

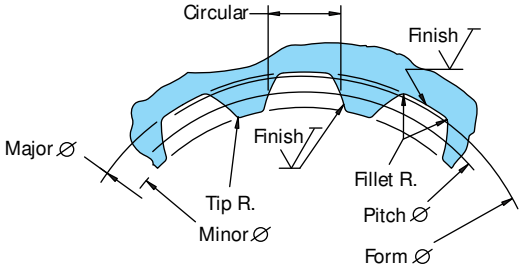

Dimensions — Shafts

VIS 30 Series (SAE)

40 mm Straight

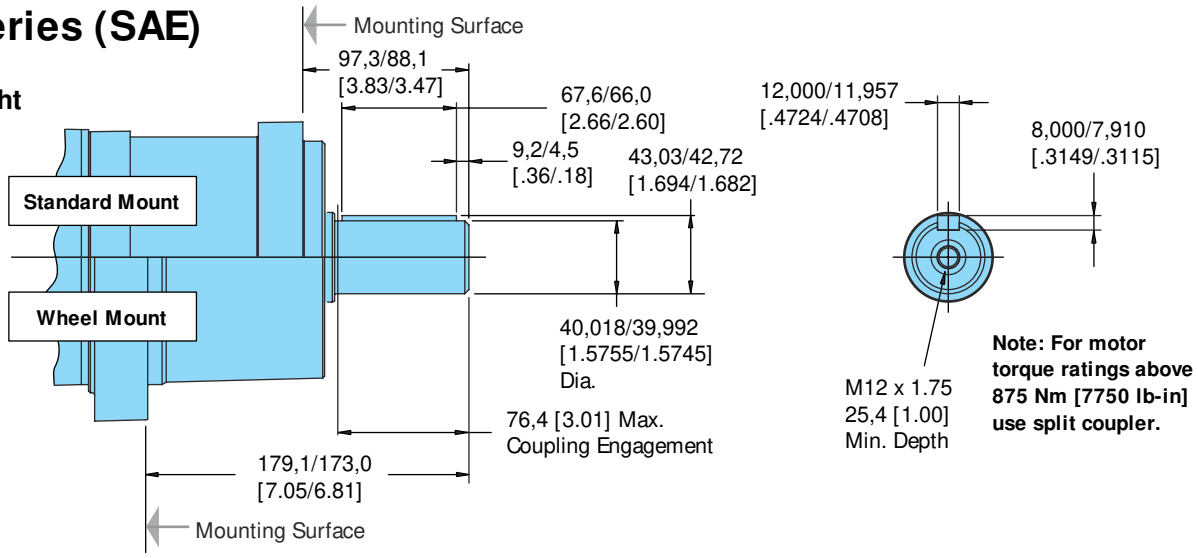

1–1/2 Inch 17 Tooth Splined

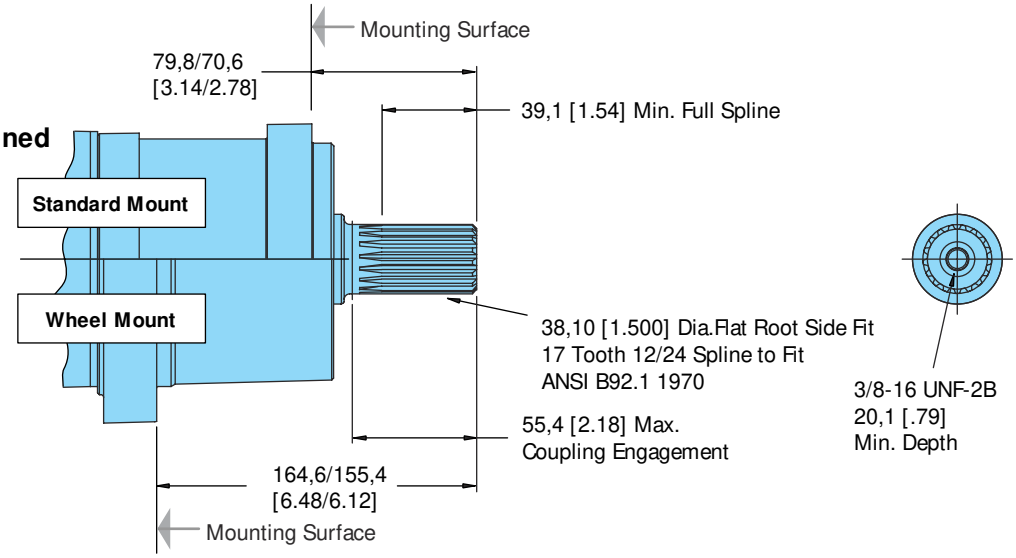

1–3/4 Inch Tapered

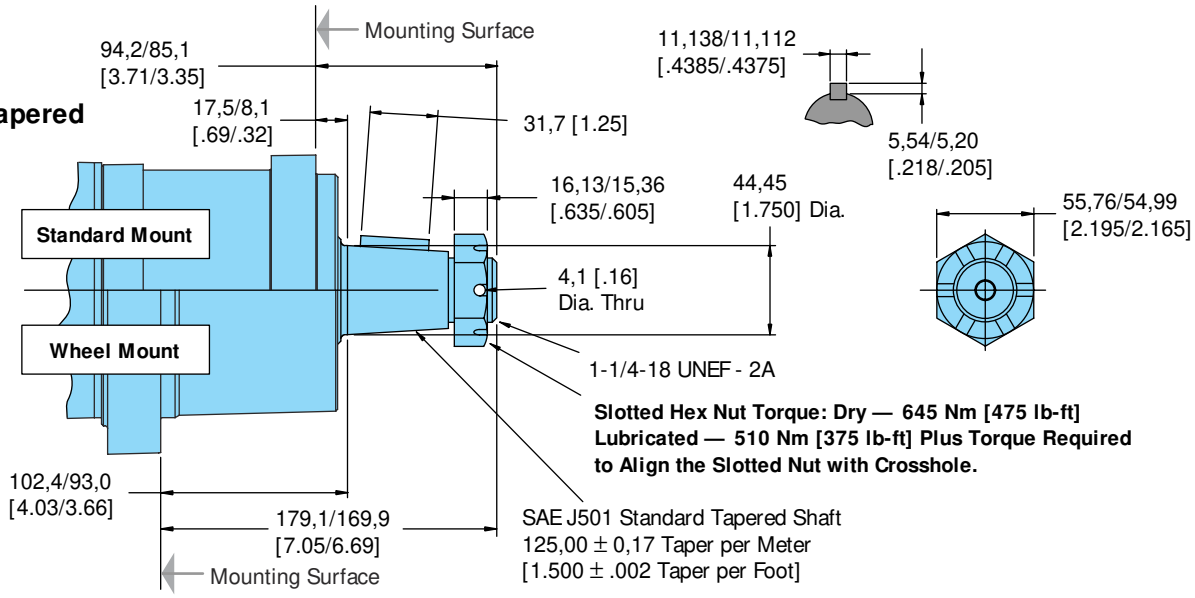

Shaft Side Load Capacity
VIS 30 Series (SAE)

These curves indicate the radial load capacity on the motor shaft(s) at various locations.

The curve is based on B 10 bearing life (2000 hours or 12,000,000 shaft revolutions at 100 RPM) at rated output torque. To determine radial load at speeds other than 100 RPM, multiply the load values given on the bearing curve by the factors in the chart below.

RPM	Multiplication Factor
50	1.23
100	1.00
200	.81
300	.72
400	.66
500	.62
600	.58
700	.56
800	.54

For 3,000,000 shaft revolutions or 500 hours — Increase these shaft loads 52%.

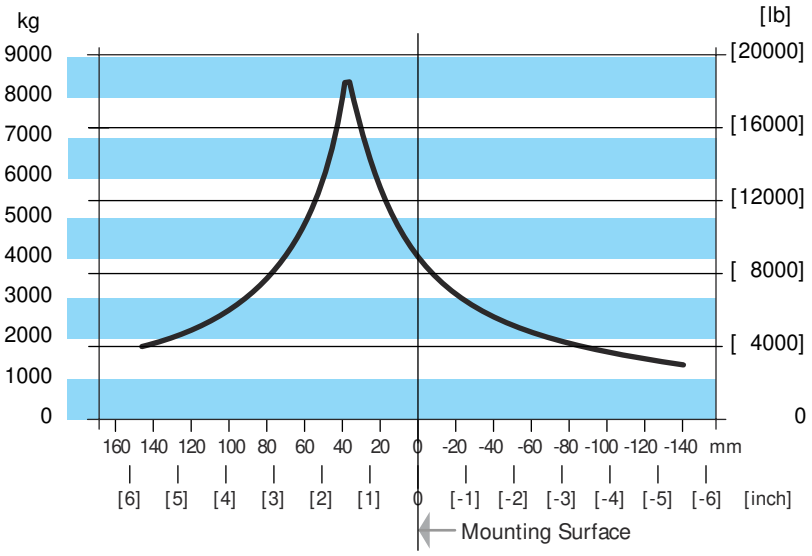

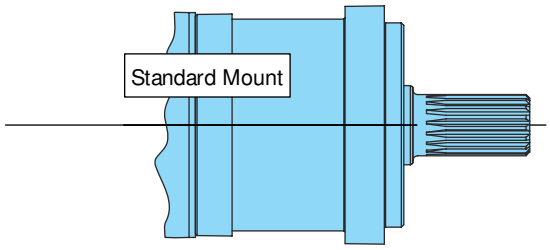

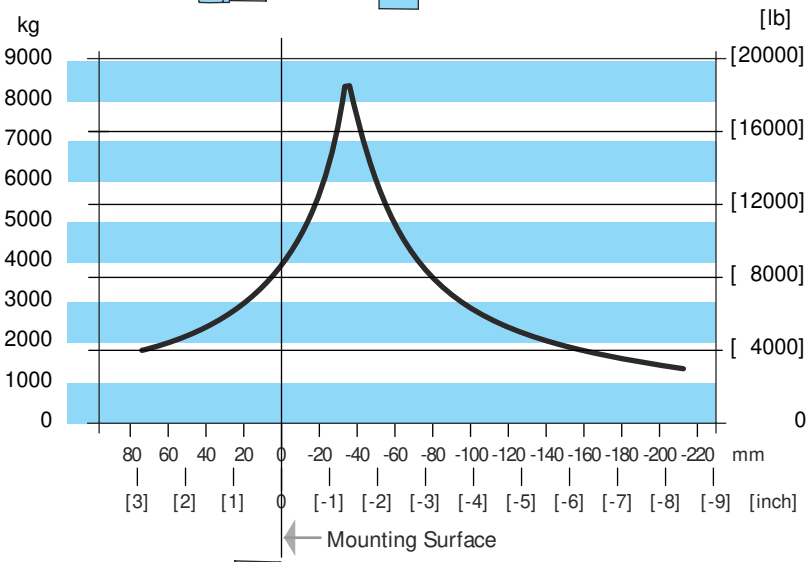

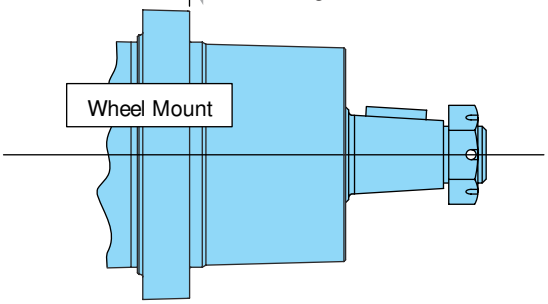

Dimensions — Shafts

VIS 30 Series (ISO)

40 mm Straight

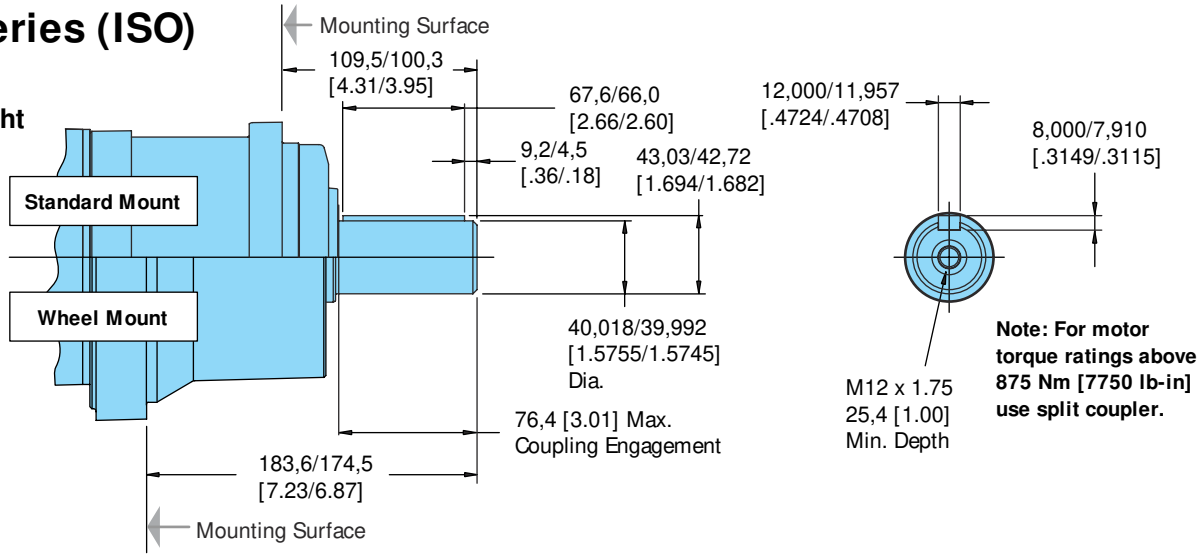

38,1 mm [1–1/2 Inch] 17 Tooth Splined

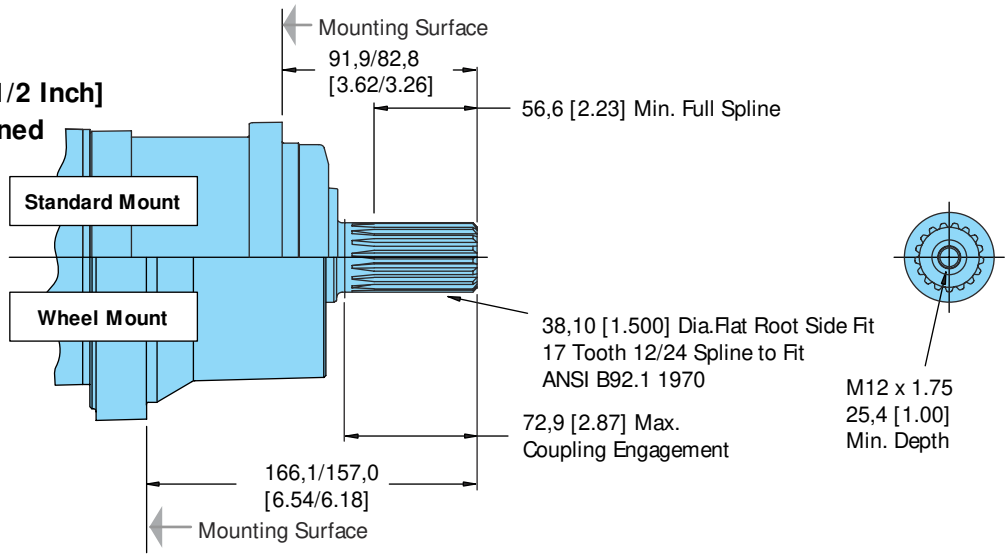

45 mm Tapered

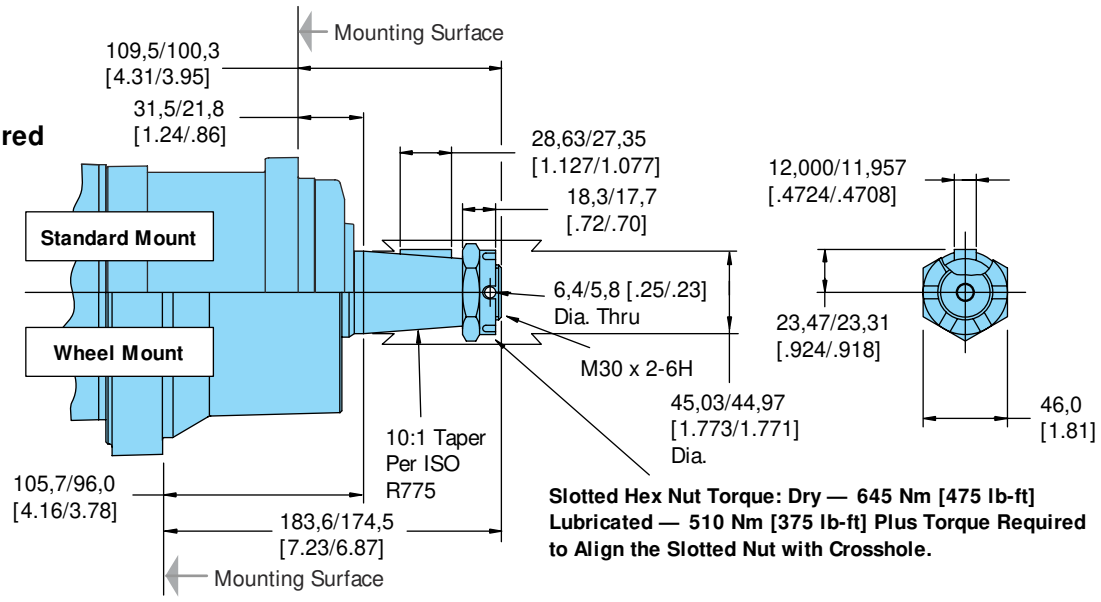

Shaft Side Load Capacity
VIS 30 Series (ISO)

These curves indicate the radial load capacity on the motor shaft(s) at various locations.

The curve is based on B 10 bearing life (2000 hours or 12,000,000 shaft revolutions at 100 RPM) at rated output torque. To determine radial load at speeds other than 100 RPM, multiply the load values given on the bearing curve by the factors in the chart below.

RPM	Multiplication Factor
50	1.23
100	1.00
200	.81
300	.72
400	.66
500	.62
600	.58
700	.56
800	.54

For 3,000,000 shaft revolutions or 500 hours — Increase these shaft loads 52%.

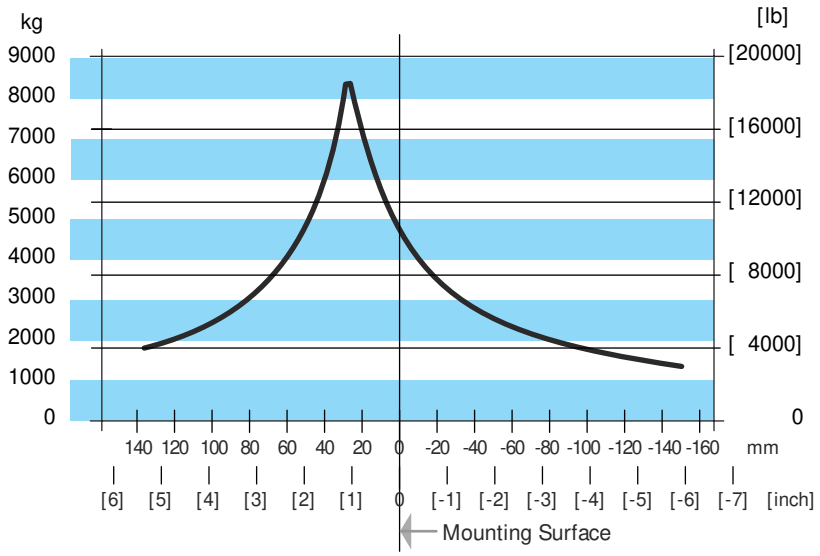

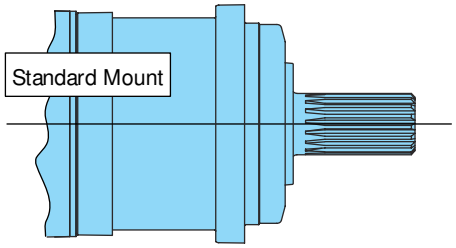

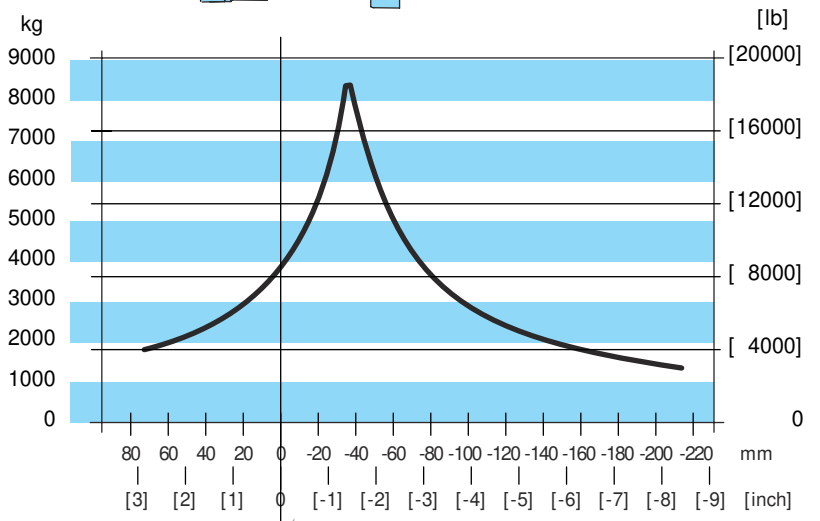

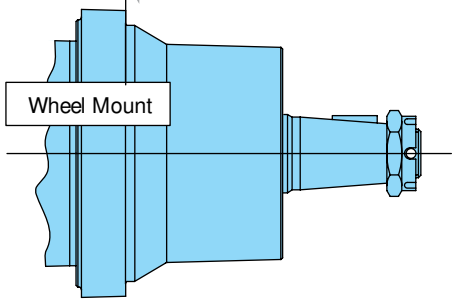

Product Numbers
VIS 30 Series (Closed Loop)

Use digit prefix —**159-**, **160-**, or **161-** plus four digit number from charts for complete product number—Example **161-**0064. **Orders will not be accepted without three digit prefix.**

SAE

Mounting	Shaft	Port Size	Displ. cm^3/r [in^3/r] / Product Number			
			325 [19.8]	400 [24.4]	505 [30.7]	570 [34.9]
Standard	40 mm Straight	1–1/16-12 UNF O-ring (2) 9/16-18 UNC Drain Port (1)	**159**-0103	-0094	-0104	-0105
	1–1/2 inch 17 Tooth Splined	1–1/16-12 UNF O-ring (2) 9/16-18 UNC Drain Port (1)	**159**-0107	-0108	-0109	-0110
	1–3/4 inch Tapered	1–1/16-12 UNF O-ring (2) 9/16-18 UNC Drain Port (1)	**159**-0112	-0113	-0114	-0115
Wheel	40 mm Straight	1–1/16-12 UNF O-ring (2) 9/16-18 UNC Drain Port (1)	**160**-0054	-0055	-0056	-0057
	1–1/2 inch 17 Tooth Splined	1–1/16-12 UNF O-ring (2) 9/16-18 UNC Drain Port (1)	**160**-0059	-0060	-0061	-0062
	1–3/4 inch Tapered	1–1/16-12 UNF O-ring (2) 9/16-18 UNC Drain Port (1)	**160**-0064	-0065	-0066	-0067
Bearingless		1–1/16-12 UNF O-ring (2) 9/16-18 UNC Drain Port (1)	**161**-0045	-0064	-0065	-0076

161-0064

ISO

Mounting	Shaft	Port Size	Displ. cm^3/r [in^3/r] / Product Number			
			325 [19.8]	400 [24.4]	505 [30.7]	570 [34.9]
Standard	40 mm Straight	G 3/4 (BSP) (2) G 1/4 (BSP) Drain Port (1)	**159**-0117	-0118	-0119	-0120
	1–1/2 inch 17 Tooth Splined	G 3/4 (BSP) (2) G 1/4 (BSP) Drain Port (1)	**159**-0122	-0123	-0124	-0125
	45 mm Tapered	G 3/4 (BSP) (2) G 1/4 (BSP) Drain Port (1)	**159**-0127	-0128	-0129	-0130
Wheel	40 mm Straight	G 3/4 (BSP) (2) G 1/4 (BSP) Drain Port (1)	**160**-0069	-0070	-0071	-0072
	1–1/2 inch 17 Tooth Splined	G 3/4 (BSP) (2) G 1/4 (BSP) Drain Port (1)	**160**-0074	-0075	-0076	-0077
	45 mm Tapered	G 3/4 (BSP) (2) G 1/4 (BSP) Drain Port (1)	**160**-0079	-0080	-0081	-0082
Bearingless		G 3/4 (BSP) (2) G 1/4 (BSP) Drain Port (1)	**161**-0067	-0068	-0069	-0070

161-0068

Note: All product numbers in the charts (above) are motors **with** back-pressure relief. These motors with relief valve would be used in Closed loop cuircuits. The back-pressure relief is set at 4,5 bar [65 PSI].

- **VIS motors must have a case drain to tank.**
- **The maximum case pressure for the VIS motor is 3,5 bar [50 PSI].**

Product Numbers
VIS 30 Series (Open Loop)

Use digit prefix —**159-**, **160-**, or **161-** plus four digit number from charts for complete product number—Example **161-**0034. **Orders will not be accepted without three digit prefix.**

SAE

Mounting	Shaft	Port Size	Displ. cm³/r [in³/r] / Product Number			
			325 [19.8]	400 [24.4]	505 [30.7]	570 [34.9]
Standard	40 mm Straight	1–1/16-12 UNF O-ring (2) 9/16-18 UNC Drain Port (1)	**159**-0035	-0038	-0041	-0131
	1–1/2 inch 17 Tooth Splined	1–1/16-12 UNF O-ring (2) 9/16-18 UNC Drain Port (1)	**159**-0036	-0039	-0042	-0132
	1–3/4 inch Tapered	1–1/16-12 UNF O-ring (2) 9/16-18 UNC Drain Port (1)	**159**-0034	-0037	-0040	-0133
Wheel	40 mm Straight	1–1/16-12 UNF O-ring (2) 9/16-18 UNC Drain Port (1)	**160**-0021	-0024	-0027	-0083
	1–1/2 inch 17 Tooth Splined	1–1/16-12 UNF O-ring (2) 9/16-18 UNC Drain Port (1)	**160**-0022	-0025	-0028	-0084
	1–3/4 inch Tapered	1–1/16-12 UNF O-ring (2) 9/16-18 UNC Drain Port (1)	**160**-0020	-0023	-0026	-0085
Bearingless		1–1/16-12 UNF O-ring (2) 9/16-18 UNC Drain Port (1)	**161**-0030	-0034	-0020	-0077

161-0034

ISO

Mounting	Shaft	Port Size	Displ. cm³/r [in³/r] / Product Number			
			325 [19.8]	400 [24.4]	505 [30.7]	570 [34.9]
Standard	40 mm Straight	G 3/4 (BSP) (2) G 1/4 (BSP) Drain Port (1)	**159**-0051	-0054	-0057	-0134
	1–1/2 inch 17 Tooth Splined	G 3/4 (BSP) (2) G 1/4 (BSP) Drain Port (1)	**159**-0050	-0053	-0056	-0135
	45 mm Tapered	G 3/4 (BSP) (2) G 1/4 (BSP) Drain Port (1)	**159**-0049	-0052	-0055	-0136
Wheel	40 mm Straight	G 3/4 (BSP) (2) G 1/4 (BSP) Drain Port (1)	**160**-0037	-0040	-0043	-0086
	1–1/2 inch 17 Tooth Splined	G 3/4 (BSP) (2) G 1/4 (BSP) Drain Port (1)	**160**-0036	-0039	-0042	-0087
	45 mm Tapered	G 3/4 (BSP) (2) G 1/4 (BSP) Drain Port (1)	**160**-0035	-0038	-0041	-0088
Bearingless		G 3/4 (BSP) (2) G 1/4 (BSP) Drain Port (1)	**161**-0035	-0036	-0037	-0078

161-0036

Note: All product numbers in the charts (above) are motors **without** back-pressue relief. These motors without relief valve would generally be used in open loop cuircuits.

For closed loop circuit as shown on page 6, a motor with a back-pressure relief valve **is required** (see product no.'s for these motors on page 22).

- **VIS motors must have a case drain to tank.**
- **The maximum case pressure for the VIS motor is 3,5 bar [50 PSI].**
- **VIS motors in an open loop circuit must have 3,5 bar [50 PSI] greater return pressure than the pressure in the case to properly lubricate the internal drive (see page 9).**

Model Code
VIS 30 Series

The following 16-digit coding system has been developed to identify all of the configuration options for the VIS 30 motor. Use this model code to specify a motor with the desired features. All 16-digits of the code must be present when ordering. You may want to photocopy the matrix below to ensure that each number is entered in the correct box.

Model Code — VIS 30 Motors

1	2	3	4	5	6	7	8	9	10	11	12	13	14	15	16
A	C	D												0	0

Positions 1, 2, 3 **Product Series**

ACD ..... VIS 30 Motor

Positions 4, 5 **Displacement cm³/r [in³/r]**

20 ..... 325 [19.8]

24 ..... 400 [24.4]

30 ..... 505 [30.7]

35 ..... 570 [34,9]

Position 6 **Mounting Type**

A ..... 4 Bolt Bearingless 127,00 [5.000] Pilot Dia. with 12,19 [.480] Pilot Length and 14,35 [.565] Dia. Holes on 161,92 [6.375] Dia. Bolt Circle

B ..... 4 Bolt Wheel Mount 160 [6.3] Pilot Dia. with 5,8 [.23] Pilot Length and 18,00 [.709] Dia. Holes on 200,00 [7.874] Dia.Bolt Circle (ISO Compatible)

F ..... 4 Bolt Standard Mount (SAE CC) 127,00 [5.000] Pilot Dia. with 12,2 [.48] Pilot Length and 14,32 [.564] Dia. Holes on 161,92 [6.375] Dia. Bolt Circle

G ..... 4 Bolt Wheel Mount 139,7 [5.50] Pilot Dia. with 7,9 [.31] Pilot Length and 14,32 [.564] Dia. Holes on 184,15 [7.250] Dia.Bolt Circle (SAE Compatible)

H ..... 4 Bolt Standard Mount 125,0 [4.92] Pilot Dia. with 8,9 [.35] Pilot Length and 14,00 [.551] Dia. Holes on 160,00 [6.299] Dia.Bolt Circle (ISO Compatible)

Positions 7, 8 **Output Shaft**

00 ..... None (Bearingless)

01 ..... 45 mm Dia. 10:1 Tapered Shaft Per ISO R775 with M30 x 2-6H Threaded Shaft End, 12W x 8H x 28L [.472W x .313H x 1.102L] Key

02 ..... 1–3/4 inch Dia. .125:1 Tapered Shaft Per SAE J501 with 1-1/4–18 UNEF-2A Threaded Shaft End, 11,11 [.4375] Square x 31,8 [1.25] Straight Key

07 ..... 40 mm Dia. Straight Shaft with M12 x 1,75-6H Thread in End, 12W x 8H x 63L [.472W x .313H x 2.480L] Key (SAE Compatible)

08 ..... 1–1/2 inch Dia. Flat Root Side Fit, 17 Tooth, 12/24 DP 30 Degree Involute Spline, 39,1 [1.54] Minimum Full Spline with 3/8-16 UNC-2B Thread in End (SAE Compatible)

09 ..... 1–1/2 inch Dia. Flat Root Side Fit, 17 Tooth, 12/24 DP30 Degree Involute Spline, 56,6 [2.23] Minimum Full Spline with M12 x 1,75-6H Thread in End (ISO Compatible)

10 ..... 40 mm Dia. Straight Shaft with M12 x 1,75-6H Thread in End, 12W x 8H x 67L [.472W x .313H x 2.630L] Key (ISO Compatible)

Position 9 **Ports**

A ..... 1–1/16-12 UN-2B Size 12 O-ring Port, Accepts Fittings for SAE J1926

B ..... G3/4 (BSP) Straight Thread Port

Position 10 **Case Flow Options**

A ..... Shuttle Valve with 9/16-18 UNF-2B, Size 6 O-ring Port Case Drain, Accepts Fittings for SAE J1926

B ..... Shuttle Valve with G1/4 (BSP) Straight Thread Port Case Drain

Position 11 **Back-Pressure Relief**

0 ..... None (for Open Loop Only)*

1 ..... Set at 4,5 bar [65 PSI] (for Manual Pumps)

2 ..... Set at 15,2 bar [220 PSI] (for Servo Pumps)

Positions 12, 13 **Special Features**

00 ..... None

Position 14 **Paint/ Special Packaging**

0 ..... No Paint, Individual Box

A ..... Painted Low Gloss Black, Individual Box

B ..... No Paint, Bulk Box Option

C ..... Painted Low Gloss Black, Bulk Box Option

Position 15 **Eaton Assigned Code when Applicable**

0 ..... Assigned Code

Position 16 **Eaton Assigned Design Code**

C ..... Assigned Design Code

* For Open Loop

- **VIS motors must have a case drain to tank.**
- **The maximum case pressure for the VIS motor is 3,5 bar [50 PSI].**
- **VIS motors in an open loop circuit must have 3,5 bar [50 PSI] greater return pressure than the pressure in the case to properly lubricate the internal drive (see page 9).**

Specifications
VIS 40 Series

VIS 40

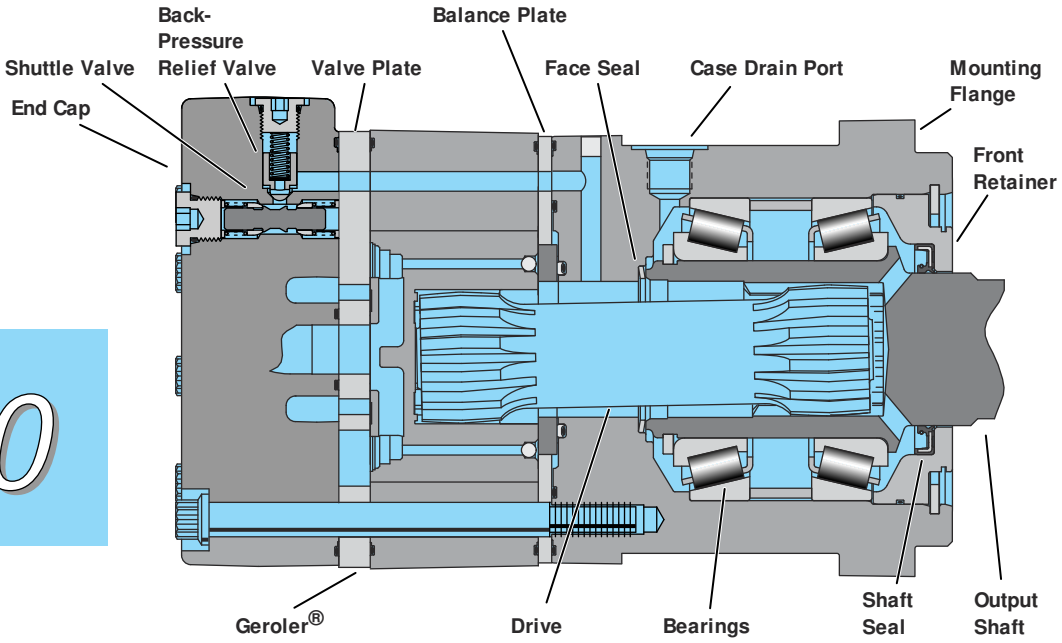

Theoretical Specification Data — VIS 40 Motors

Displ. cm^3/r [in^3/r]		505 [30.7]	570 [34.9]	630 [38.5]	685 [41.7]	785 [48.0]	940 [57.4]
Theo. Max. Speed (RPM) @ ..... Flow	Continuous	225	198	180	166	144	120
	Intermittent	263	231	210	194	168	140
Flow l/min [GPM]	Continuous	114 [30]	114 [30]	114 [30]	114 [30]	114 [30]	114 [30]
	Intermittent	132 [35]	132 [35]	132 [35]	132 [35]	132 [35]	132 [35]
Theo. Torque Nm [lb-in]	Continuous	2485 [22000]	2711 [23995]	2714 [24020]	2714 [24025]	2711 [23990]	2714 [24025]
	Intermittent	2760 [24430]	3138 [27775]	3392 [30025]	3390 [30000]	3392 [30020]	3390 [30000]
Pressure Δ bar [Δ PSI]	Continuous	310 [4500]	298 [4320]	270 [3920]	250 [3620]	216 [3140]	181 [2630]
	Intermittent	345 [5000]	345 [5000]	338 [4900]	312 [4520]	271 [3930]	226 [3285]
	Peak	379 [5500]	379 [5500]	379 [5500]	372 [5400]	324 [4700]	272 [3950]

A simultaneous maximum torque and maximum speed NOT recommended.

Maximum Inlet Pressure — 400 bar [5800 PSI]. **Do Not Exceed A Pressure Rating** (for displacement size see chart above).

Return Pressure (Back-Pressure):

Minimum — 3,5 bar [50 PSI]

Maximum — 21 bar [300 PSI]

Note — Return (back-pressure) must be 3,5 bar [50 PSI] greater than the case pressure.

Case Pressure:

Minimum — No Pressure

Maximum — 3,5 bar [50 PSI]

Note — The case must be full when the motor is operating (case drain out the top). A case drain is required.

Δ Pressure — The true Δ bar [Δ PSI] between inlet port and outlet port.

Continuous Rating — Motor may be run continuously at these ratings.

Intermittent Operation — 10% of every minute.

Peak Operation — 1% of every minute.

Recommended Fluids — Premium quality, anti-wear type hydraulic oil with a viscosity of not less than 70 SUS at operating temperature.

Recommended Maximum System Operating Temp. — Is 82° C [180° F]

Recommended Filtration — per ISO Cleanliness Code, level 18/13

Shuttle — Standard

Back-Pressure Relief Valve — Required for closed loop circuit.

To assure best motor life, run motor for approximately one hour at 30% of rated pressure before application to full load. Be sure motor is filled with fluid prior to any load applications.

Performance Data
VIS 40 Series

Motors run with high efficiency in all areas designated with a number for torque and speed, *however for best motor life select a motor to run with a torque and speed range printed in the white background area.*

Continuous

Intermittent

VIS 40 - 505 cm3/r [30.7 in3/r] Δ Pressure

Flow GPM l/min	Psi / **bar**	250 **17**	500 **34**	1000 **69**	1500 **103**	2000 **138**	2500 **172**	3000 **207**	3500 **241**	4000 **276**	4500 **310**	5000 **345**
4		866	2003	4191	6337	8403	10479	12486	14442	16381	17999	19999
		98	*226*	*473*	*716*	*949*	*1184*	*1411*	*1632*	*1851*	*2033*	*2259*
15		**29**	**29**	**28**	**28**	**27**	**27**	**26**	**25**	**25**	**24**	**24**
8		873	2021	4275	6520	8732	10908	13080	15212	17236	18961	21068
		99	*228*	*483*	*737*	*986*	*1232*	*1478*	*1718*	*1947*	*2142*	*2380*
30		**55**	**58**	**58**	**57**	**56**	**55**	**55**	**54**	**54**	**52**	**52**
12		829	1979	4266	6537	8785	11031	13243	15427	17555	19320	21466
		94	*224*	*482*	*738*	*992*	*1246*	*1496*	*1743*	*1983*	*2183*	*2425*
45		**85**	**85**	**87**	**85**	**84**	**84**	**83**	**83**	**82**	**79**	**79**
16		833	1880	4207	6495	8758	11006	13261	15483	17664	19442	21603
		94	*212*	*475*	*734*	*989*	*1243*	*1498*	*1749*	*1996*	*2196*	*2440*
61		**111**	**113**	**114**	**115**	**113**	**112**	**112**	**111**	**112**	**108**	**108**
20		803	1768	4110	6405	8701	10982	13243	15485	17666	19445	21605
		91	*200*	*464*	*724*	*983*	*1241*	*1496*	*1749*	*1996*	*2197*	*2441*
76		**141**	**142**	**142**	**143**	**142**	**141**	**140**	**139**	**140**	**135**	**135**
25		754	1670	3948	6274	8569	10875	13163	15393	17561	19327	
		85	*189*	*446*	*709*	*968*	*1229*	*1487*	*1739*	*1984*	*2183*	
95		**178**	**176**	**177**	**179**	**178**	**177**	**176**	**175**	**177**	**170**	
30			1433	3744	6091	8379	10674	12964	15275	17426	19175	
			162	*423*	*688*	*947*	*1206*	*1465*	*1726*	*1969*	*2166*	
114			**213**	**212**	**212**	**214**	**214**	**212**	**211**	**213**	**205**	
35			1409	3645	5842	8164	10475	12790	15029	17145		
			159	*412*	*660*	*922*	*1183*	*1445*	*1698*	*1937*		
132			**250**	**246**	**246**	**248**	**249**	**248**	**249**	**251**		

15029 Torque [lb-in]
1698 *Torque (Nm)*
249 **Speed (RPM)**

Performance data is typical at 120 SUS. Actual data may vary slightly from unit to unit in production

VIS 40 - 570 cm3/r [34.9 in3/r] Δ Pressure

Flow GPM l/min	PSI / **bar**	250 **17**	500 **34**	1000 **69**	1500 **103**	2000 **138**	2500 **172**	3000 **207**	3500 **241**	4000 **276**	4500 **310**	5000 **345**
4		984	2277	4764	7204	9553	11913	14194	16418	18622	20461	22735
		111	*257*	*538*	*814*	*1079*	*1346*	*1604*	*1855*	*2104*	*2312*	*2568*
15		**26**	**26**	**25**	**25**	**24**	**24**	**23**	**22**	**22**	**21**	**21**
8		992	2297	4860	7412	9927	12400	14869	17293	19594	21555	23950
		112	*260*	*549*	*837*	*1121*	*1401*	*1680*	*1954*	*2214*	*2435*	*2706*
30		**48**	**51**	**51**	**50**	**49**	**48**	**48**	**48**	**48**	**46**	**46**
12		942	2250	4850	7431	9987	12540	15055	17538	19957	21963	24403
		106	*254*	*548*	*840*	*1128*	*1417*	*1701*	*1981*	*2255*	*2481*	*2757*
45		**75**	**75**	**77**	**75**	**74**	**74**	**73**	**73**	**72**	**69**	**69**
16		947	2137	4783	7384	9956	12512	15075	17601	20081	22102	
		107	*241*	*540*	*834*	*1125*	*1413*	*1703*	*1988*	*2269*	*2497*	
61		**98**	**99**	**100**	**101**	**99**	**99**	**99**	**98**	**99**	**95**	
20		913	2010	4672	7281	9891	12484	15055	17603	20083	22105	
		103	*227*	*528*	*823*	*1117*	*1410*	*1701*	*1989*	*2269*	*2497*	
76		**124**	**125**	**125**	**126**	**125**	**124**	**123**	**122**	**123**	**119**	
25		858	1899	4488	7132	9741	12363	14964	17499	19964		
		97	*215*	*507*	*806*	*1100*	*1397*	*1690*	*1977*	*2255*		
95		**157**	**155**	**156**	**157**	**157**	**156**	**155**	**154**	**155**		
30			1629	4256	6924	9525	12134	14738	17365	19810		
			184	*481*	*782*	*1076*	*1371*	*1665*	*1962*	*2238*		
114			**188**	**186**	**186**	**188**	**188**	**186**	**186**	**187**		
35			1602	4144	6641	9281	11908	14540	17085			
			181	*468*	*750*	*1048*	*1345*	*1643*	*1930*			
132			**220**	**216**	**216**	**218**	**219**	**218**	**219**			

17085 Torque [lb-in]
1930 *Torque (Nm)*
219 **Speed (RPM)**

Performance Data
VIS 40 Series

Motors run with high efficiency in all areas designated with a number for torque and speed, *however for best motor life select a motor to run with a torque and speed range printed in the white background area.*

Continuous

Intermittent

VIS 40 - 630 cm3/r [38.5 in3/r]

Δ Pressure

Flow GPM / l/min	PSI / bar	250	500	1000	1500	2000	2500	3000	3500	4000	4500	5000
		17	**34**	**69**	**103**	**138**	**172**	**207**	**241**	**276**	**310**	**345**
4		1086	2512	5256	7947	10538	13141	15658	18111	20543	22572	25080
		123	*284*	*594*	*898*	*1190*	*1485*	*1769*	*2046*	*2321*	*2550*	*2833*
15		**23**	**23**	**22**	**22**	**22**	**22**	**21**	**20**	**20**	**19**	**19**
8		1095	2534	5361	8177	10951	13679	16403	19077	21615	23778	26420
		124	*286*	*606*	*924*	*1237*	*1545*	*1853*	*2155*	*2442*	*2686*	*2985*
30		**44**	**46**	**46**	**45**	**45**	**44**	**44**	**43**	**43**	**41**	**41**
12		1040	2482	5350	8198	11017	13834	16608	19347	22015	24228	26920
		117	*280*	*604*	*926*	*1245*	*1563*	*1876*	*2186*	*2487*	*2737*	*3041*
45		**68**	**68**	**69**	**68**	**67**	**67**	**66**	**66**	**65**	**63**	**63**
16		1044	2358	5276	8145	10983	13802	16630	19417	22152	24382	
		118	*266*	*596*	*920*	*1241*	*1559*	*1879*	*2194*	*2503*	*2754*	
61		**89**	**90**	**91**	**92**	**90**	**89**	**89**	**89**	**89**	**86**	
20		1007	2217	5154	8032	10912	13772	16608	19419	22155		
		114	*250*	*582*	*907*	*1233*	*1556*	*1876*	*2194*	*2503*		
76		**112**	**113**	**113**	**114**	**113**	**112**	**112**	**111**	**112**		
25		946	2095	4951	7868	10746	13638	16507	19304			
		107	*237*	*559*	*889*	*1214*	*1541*	*1865*	*2181*			
95		**142**	**141**	**141**	**143**	**142**	**141**	**140**	**140**			
30			1797	4695	7639	10508	13386	16258	19156			
			203	*530*	*863*	*1187*	*1512*	*1837*	*2164*			
114			**170**	**169**	**169**	**171**	**171**	**169**	**168**			
35			1767	4571	7326	10238	13136	16040	18847			
			200	*516*	*828*	*1157*	*1484*	*1812*	*2129*			
132			**199**	**196**	**196**	**198**	**199**	**198**	**199**			

16040 Torque [lb-in]
1812 Torque (Nm)
198 Speed (RPM)

Performance data is typical at 120 SUS. Actual data may vary slightly from unit to unit in production

VIS 40 - 685 cm3/r [41.7 in3/r]

Δ Pressure

Flow GPM / l/min	PSI / bar	250	500	1000	1500	2000	2500	3000	3500	4000	4500	5000
		17	**34**	**69**	**103**	**138**	**172**	**207**	**241**	**276**	**310**	**345**
4		1176	2721	5693	8608	11414	14234	16960	19617	22250	24448	27165
		133	*307*	*643*	*972*	*1289*	*1608*	*1916*	*2216*	*2514*	*2762*	*3069*
15		**21**	**21**	**21**	**21**	**20**	**20**	**19**	**18**	**18**	**18**	**18**
8		1186	2745	5807	8856	11861	14816	17767	20663	23412	25755	28616
		134	*310*	*656*	*1000*	*1340*	*1674*	*2007*	*2334*	*2645*	*2910*	*3233*
30		**40**	**43**	**43**	**42**	**41**	**40**	**40**	**40**	**40**	**38**	**38**
12		1126	2688	5795	8879	11933	14983	17988	20955	23845	26242	
		127	*304*	*655*	*1003*	*1348*	*1693*	*2032*	*2367*	*2694*	*2965*	
45		**63**	**63**	**64**	**63**	**62**	**62**	**61**	**61**	**60**	**58**	
16		1131	2554	5714	8822	11896	14950	18012	21031	23993		
		128	*288*	*646*	*997*	*1344*	*1689*	*2035*	*2376*	*2711*		
61		**82**	**83**	**84**	**85**	**83**	**82**	**82**	**82**	**82**		
20		1091	2401	5583	8700	11819	14917	17988	21033			
		123	*271*	*631*	*983*	*1335*	*1685*	*2032*	*2376*			
76		**104**	**105**	**105**	**105**	**105**	**104**	**103**	**102**			
25		1025	2269	5363	8522	11639	14772	17879	20908			
		116	*256*	*606*	*963*	*1315*	*1669*	*2020*	*2362*			
95		**131**	**130**	**130**	**132**	**131**	**130**	**130**	**129**			
30			1947	5085	8273	11381	14499	17609	20748			
			220	*575*	*935*	*1286*	*1638*	*1989*	*2344*			
114			**157**	**156**	**156**	**158**	**158**	**156**	**155**			
35			1914	4951	7935	11089	14228	17373				
			216	*559*	*896*	*1253*	*1607*	*1963*				
132			**184**	**181**	**181**	**183**	**183**	**183**				

17373 Torque [lb-in]
1963 Torque (Nm)
183 Speed (RPM)

Performance Data
VIS 40 Series

Motors run with high efficiency in all areas designated with a number for torque and speed, *however for best motor life select a motor to run with a torque and speed range printed in the white background area.*

Continuous

Intermittent

VIS 40 - 785 cm3/r [48.0 in3/r]

Δ Pressure

Flow GPM / l/min	PSI / bar	250 / 17	500 / 34	1000 / 69	1500 / 103	2000 / 138	2500 / 172	3000 / 207	3500 / 241	4000 / 276	4500 / 310	5000 / 345
4 / 15		1354 *153* **19**	3132 *354* **19**	6553 *740* **18**	9908 *1119* **18**	13138 *1484* **17**	16384 *1851* **17**	19522 *2205* **17**	22580 *2551* **16**	25612 *2893* **16**	28142 *3179* **15**	31269 *3532* **15**
8 / 30		1365 *154* **35**	3160 *357* **37**	6684 *755* **37**	10194 *1152* **36**	13653 *1542* **36**	17055 *1927* **35**	20451 *2310* **35**	23784 *2687* **35**	26949 *3044* **35**	29646 *3349* **33**	32940 *3721* **33**
12 / 45		1296 *146* **54**	3094 *350* **54**	6670 *754* **56**	10221 *1155* **54**	13736 *1552* **54**	17247 *1948* **54**	20706 *2339* **53**	24120 *2725* **53**	27448 *3101* **52**		
16 / 61		1302 *147* **71**	2939 *332* **72**	6578 *743* **73**	10155 *1147* **74**	13693 *1547* **72**	17208 *1944* **72**	20734 *2342* **72**	24208 *2735* **71**			
20 / 76		1256 *142* **90**	2764 *312* **91**	6426 *726* **91**	10014 *1131* **91**	13604 *1537* **91**	17171 *1940* **90**	20706 *2339* **90**	24211 *2735* **89**			
25 / 95		1180 *133* **114**	2612 *295* **113**	6173 *697* **113**	9810 *1108* **114**	13398 *1514* **114**	17003 *1921* **113**	20581 *2325* **113**				
30 / 114			2241 *253* **136**	5854 *661* **136**	9523 *1076* **136**	13101 *1480* **137**	16689 *1885* **137**	20269 *2290* **136**				
35 / 132			2203 *249* **160**	5699 *644* **157**	9134 *1032* **157**	12765 *1442* **159**	16378 *1850* **159**	19997 *2259* **159**				

19997 Torque [lb-in]
2259 Torque (Nm)
159 Speed (RPM

Performance data is typical at 120 SUS. Actual data may vary slightly from unit to unit in production

VIS 40 - 940 cm3/r [57.4 in3/r]

Δ Pressure

Flow GPM / l/min	PSI / bar	250 / 17	500 / 34	1000 / 69	1500 / 103	2000 / 138	2500 / 172	3000 / 207	3500 / 241	4000 / 276	4500 / 310	5000 / 345
4 / 15		1619 *183* **16**	3745 *423* **16**	7836 *885* **15**	11848 *1339* **15**	15711 *1775* **14**	19593 *2213* **14**	23345 *2637* **14**	27002 *3050* **13**	30628 *3460* **13**	33653 *3802* **13**	37392 *4224* **13**
8 / 30		1632 *184* **29**	3779 *427* **31**	7993 *903* **31**	12190 *1377* **30**	16326 *1844* **30**	20395 *2304* **29**	24456 *2763* **29**	28442 *3213* **29**	32226 *3641* **29**		
12 / 45		1550 *175* **45**	3700 *418* **45**	7976 *901* **47**	12222 *1381* **45**	16425 *1856* **45**	20625 *2330* **45**	24761 *2797* **44**	28844 *3259* **44**			
16 / 61		1557 *176* **60**	3515 *397* **60**	7866 *889* **61**	12144 *1372* **62**	16375 *1850* **60**	20578 *2325* **60**	24794 *2801* **60**				
20 / 76		1502 *170* **75**	3306 *373* **76**	7684 *868* **76**	11975 *1353* **76**	16268 *1838* **76**	20533 *2320* **75**	24761 *2797* **75**				
25 / 95		1411 *159* **95**	3123 *353* **94**	7382 *834* **95**	11731 *1325* **96**	16022 *1810* **95**	20333 *2297* **95**					
30 / 114			2680 *303* **114**	7000 *791* **113**	11388 *1287* **113**	15666 *1770* **114**	19957 *2255* **114**					
35 / 132			2634 *298* **134**	6815 *770* **132**	10923 *1234* **132**	15264 *1724* **133**	19585 *2213* **133**					

19585 Torque [lb-in]
2213 Torque (Nm)
133 Speed RPM

Dimension — VIS 40 Series (Standard and Wheel Mount – SAE)

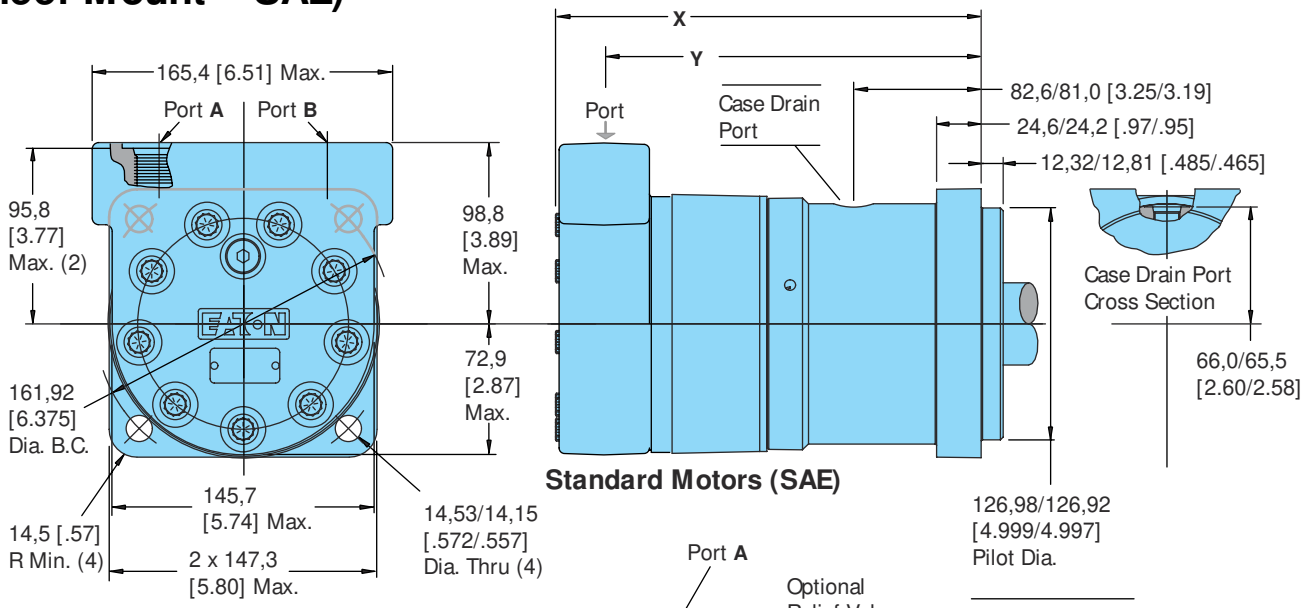

Standard Motors (SAE)

Displ. cm^3/r [in^3/r]	Y mm [inch]	X mm [inch]
505 [30.7]	204,5 [8.05]	230,4 [9.07]
570 [34.9]	210,6 [8.29]	236,5 [9.31]
630 [38.5]	215,9 [8.50]	241,9 [9.52]
685 [41.7]	220,5 [8,68]	246,4 [9.70]
785 [48.0]	229,9 [9.05]	255,8 [10.07]
940 [57.4]	243,3 [9.58]	269,2 [10,60]

Wheel Motors (SAE)

505 [30.7]	119,7 [4.71]	145,6 [5.73]
570 [34.9]	125,7 [4.95]	151,6 [5.97]
630 [38.5]	131,1 [5.16]	157,0 [6.18]
685 [41.7]	135,6 [5.34]	161,5 [6.36]
785 [48.0]	145,0 [5.71]	170,9 [6.73]
940 [57.4]	158,5 [6.24]	184,4 [7.26]

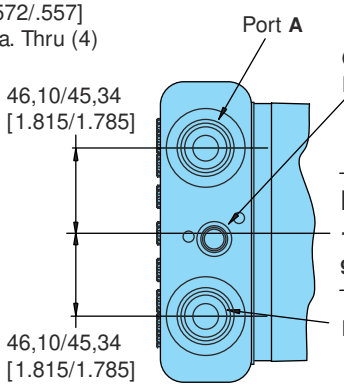

Shaft Dimensions See Page 34

Ports

1–1/16-12 UN-2B SAE O-ring Ports (2)
9/16-18 UNF-2B SAE O-ring Case Drain Port (1)

Standard Rotation
Viewed from Shaft End
Port **A** Pressurized — CW
Port **B** Pressurized — CCW

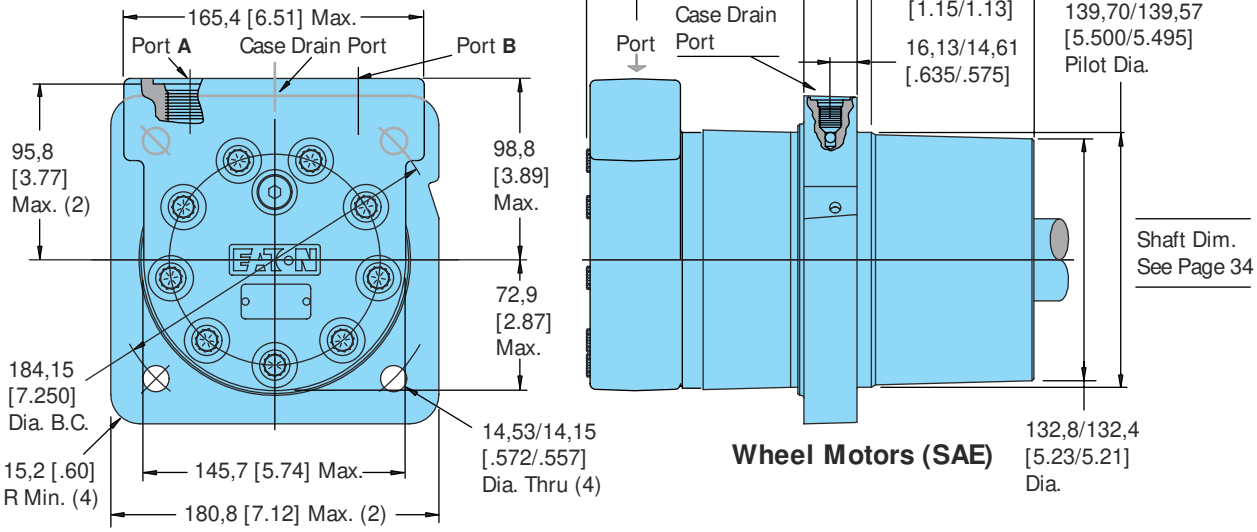

Shaft Dim. See Page 34

Dimension — VIS 40 Series Oversize Flange 224,0 [8.82] B.C.

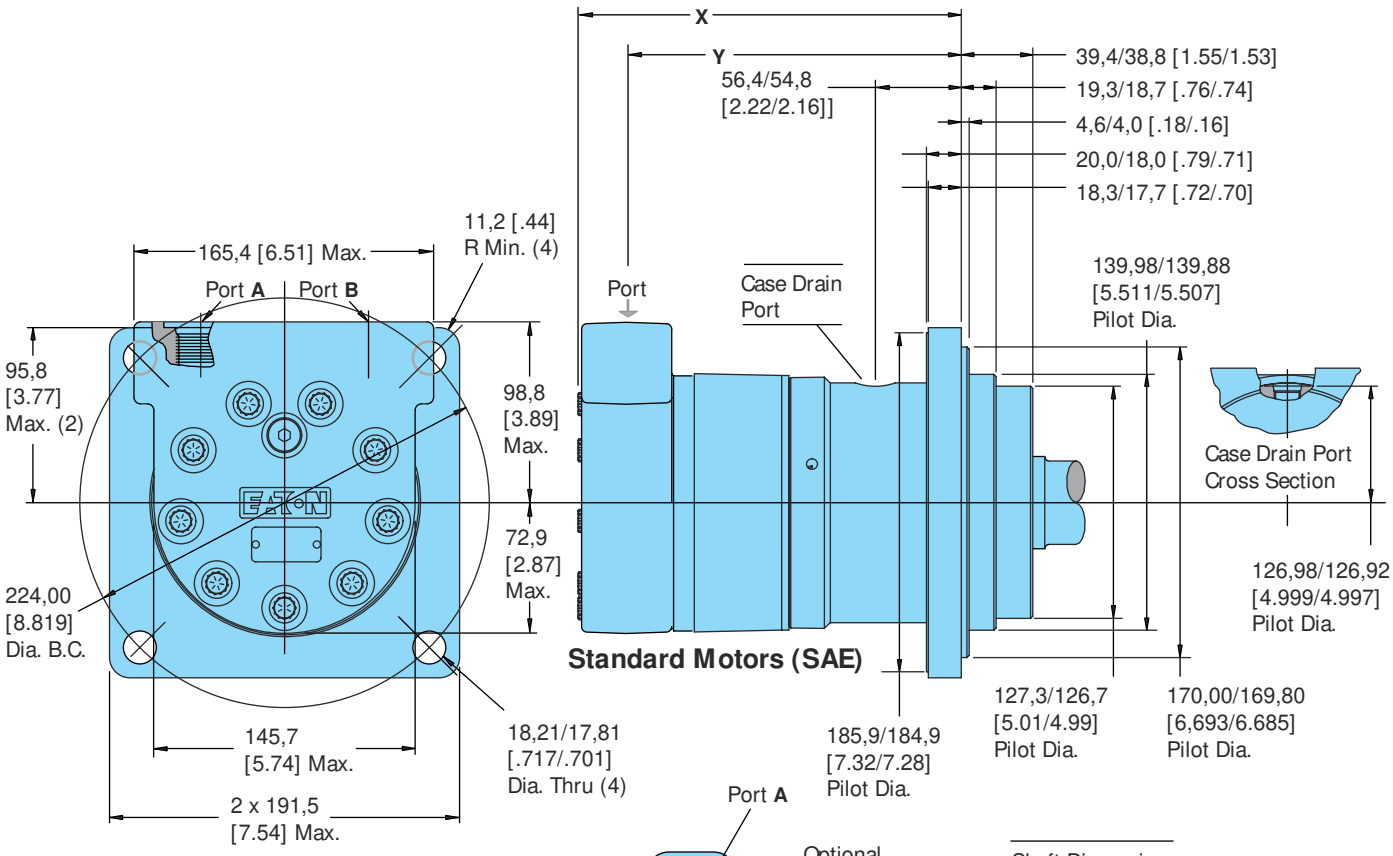

Shaft Dimensions
See Page 34

Standard Motors

Displ. cm^3/r [in^3/r]	Y mm [inch]	X mm [inch]
505 [30.7]	181,4 [7.14]	213,1 [8.39]
570 [34.9]	187,4 [7.38]	219,2 [8.63]
630 [38.5]	192,5 [7.58]	224,5 [8.84]
685 [41.7]	197,6 [7.78]	229,1 [9.02]
785 [48.0]	206,8 [8.14]	238,5 [9.39]
940 [57.4]	220,5 [8.68]	252,0 [9.92]

Ports

1–1/16-12 UN-2B SAE O-ring Ports (2)
9/16-18 UNF-2B SAE O-ring Case Drain Port (1)

Standard Rotation
Viewed from Shaft End
Port **A** Pressurized — CW
Port **B** Pressurized — CCW

Dimension — VIS 40 Series (Standard and Wheel Mount – ISO)

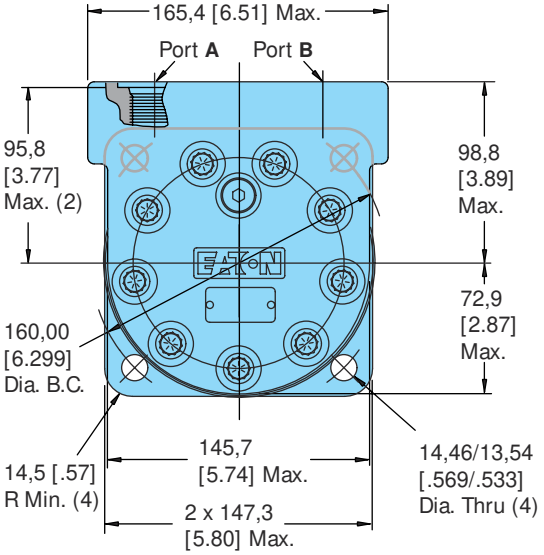

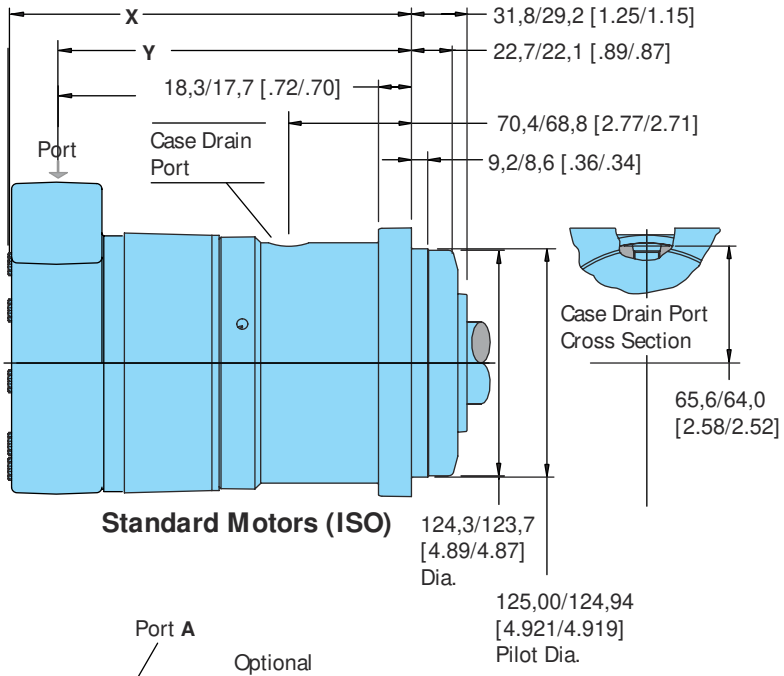

Standard Motors (ISO)

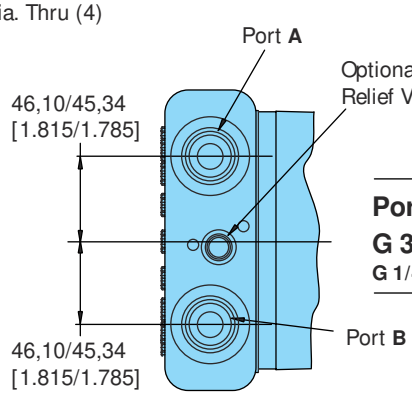

Shaft Dimensions See Page 34

VIS 40 Standard Motors (ISO)

Displ. cm^3/r [in^3/r]	Y mm [inch]	X mm [inch]
505 [30.7]	192,5 [7.58]	218,4 [8.60]
570 [34.9]	198,6 [7.82]	224,5 [8.84]
630 [38.5]	203,7 [8.02]	229,6 [9.04]
685 [41.7]	208,8 [8,22]	234,7 [9.24]
785 [48.0]	217,9 [8.58]	243,8 [9.60]
940 [57.4]	231,1 [9.10]	257,0 [10,12]

VIS 40 Wheel Motors (ISO)

Displ. cm^3/r [in^3/r]	Y mm [inch]	X mm [inch]
505 [30.7]	118,4 [4.66]	144,3 [5.68]
570 [34.9]	124,5 [4.90]	150,4 [5.92]
630 [38.5]	129,5 [5.10]	155,4 [6.12]
685 [41.7]	134,6 [5.30]	160,5 [6.32]
785 [48.0]	143,8 [5.66]	169.7 [6.68]
940 [57.4]	157,0 [6.18]	182,9 [7.20]

Ports

G 3/4 (BSP) O-ring Ports (2)
G 1/4 (BSP) O-ring Case Drain Port (1)

Standard Rotation
Viewed from Shaft End
Port **A** Pressurized — CW
Port **B** Pressurized — CCW

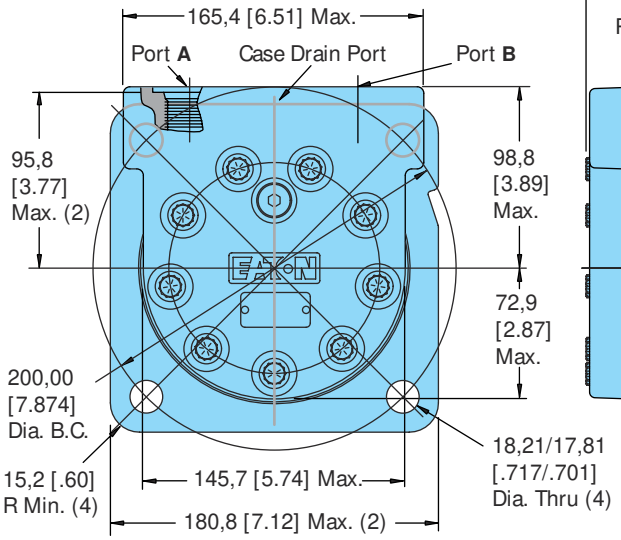

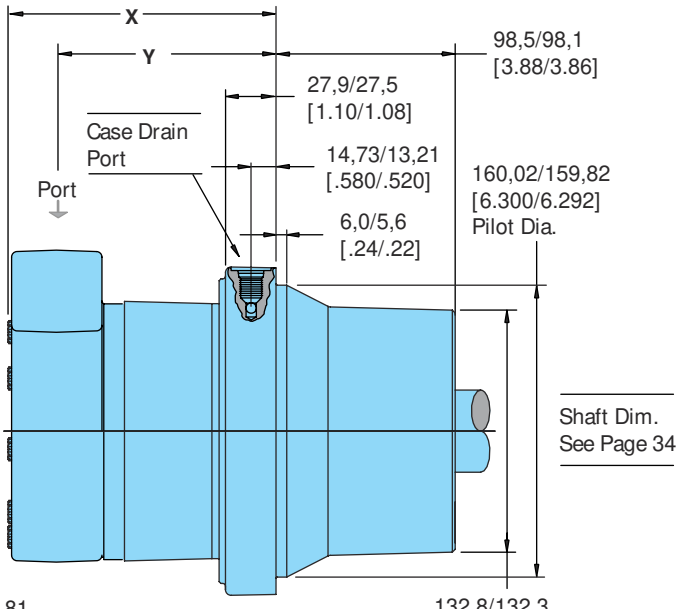

Wheel Motors (ISO)

Shaft Dim. See Page 34

Dimensions — VIS 40 Series (Bearingless)

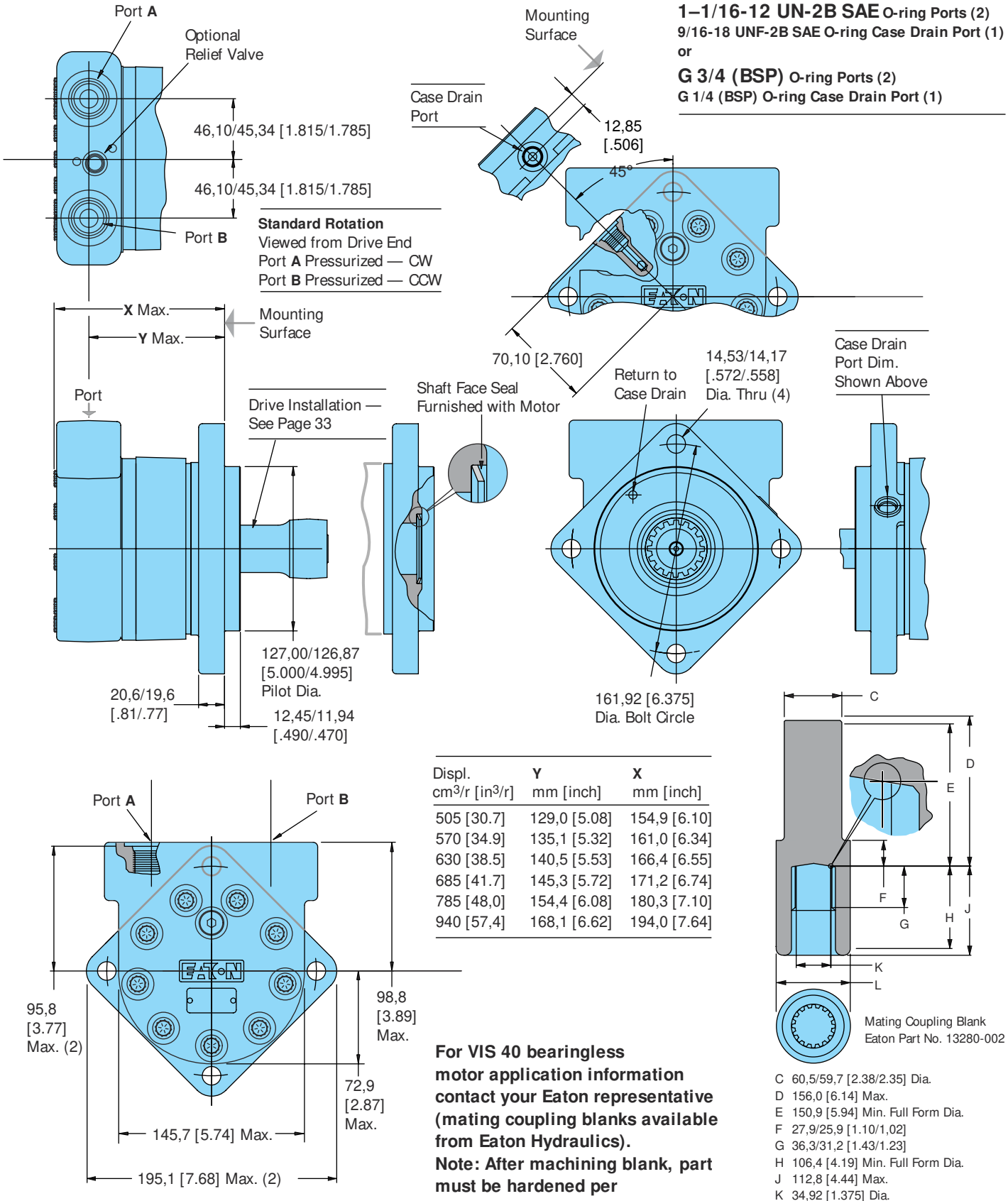

Ports

1–1/16-12 UN-2B SAE O-ring Ports (2)
9/16-18 UNF-2B SAE O-ring Case Drain Port (1)
or
G 3/4 (BSP) O-ring Ports (2)
G 1/4 (BSP) O-ring Case Drain Port (1)

Displ. cm^3/r [in^3/r]	Y mm [inch]	X mm [inch]
505 [30.7]	129,0 [5.08]	154,9 [6.10]
570 [34.9]	135,1 [5.32]	161,0 [6.34]
630 [38.5]	140,5 [5.53]	166,4 [6.55]
685 [41.7]	145,3 [5.72]	171,2 [6.74]
785 [48,0]	154,4 [6.08]	180,3 [7.10]
940 [57,4]	168,1 [6.62]	194,0 [7.64]

For VIS 40 bearingless motor application information contact your Eaton representative (mating coupling blanks available from Eaton Hydraulics).
Note: After machining blank, part must be hardened per Eaton specification.

C 60,5/59,7 [2.38/2.35] Dia.
D 156,0 [6.14] Max.
E 150,9 [5.94] Min. Full Form Dia.
F 27,9/25,9 [1.10/1,02]
G 36,3/31,2 [1.43/1.23]
H 106,4 [4.19] Min. Full Form Dia.
J 112,8 [4.44] Max.
K 34,92 [1.375] Dia.
L 72,9/72,1[2.87/2.84] Dia.

Installation Information for Bearingless Motor — VIS 40 Series

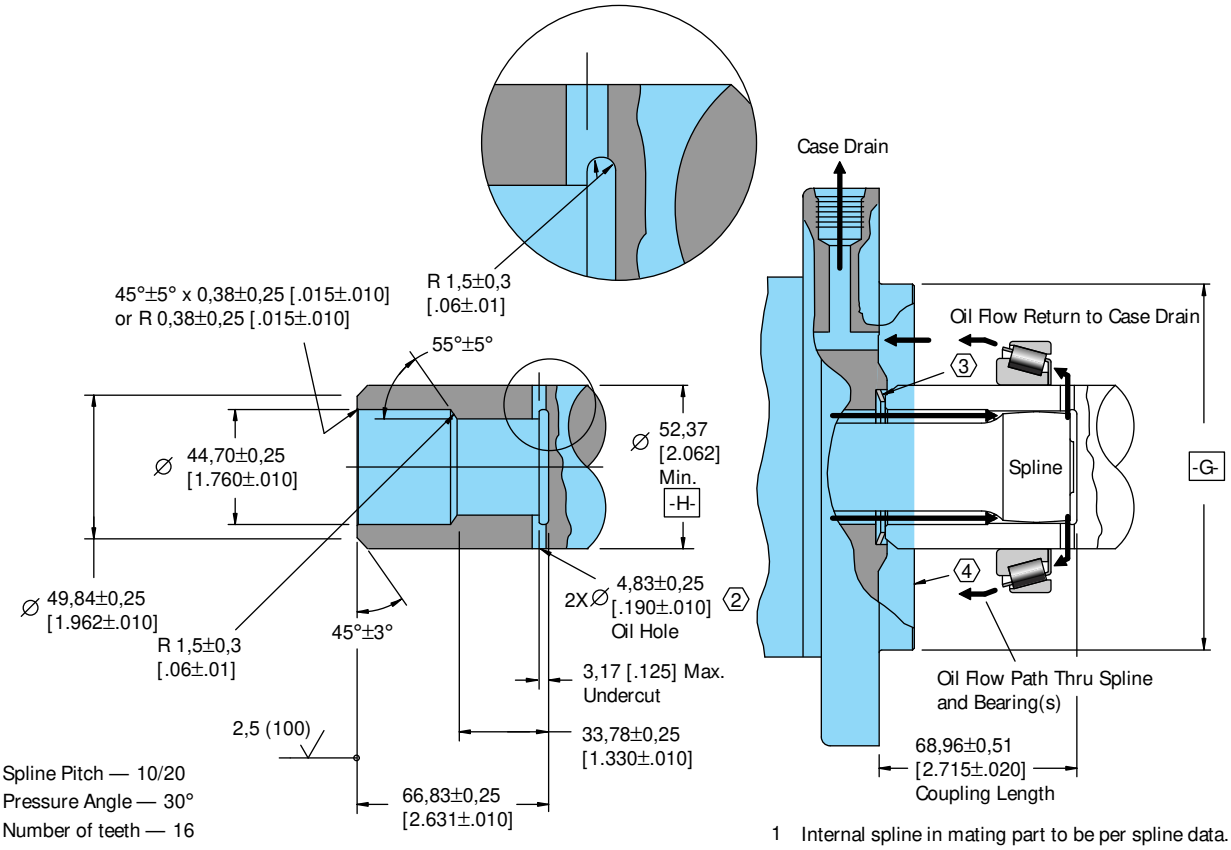

Spline Pitch — 10/20
Pressure Angle — 30°
Number of teeth — 16
Class of Fit — Ref. 5
Type of Fit — Side
Pitch Diameter — Ref. 40,640000 [1.6000000] ⌀ 0,20 [.008] H
Base Diameter — Ref. 35,195272 [1.3856406]
Major Diameter — 43,56 [1.715] Max. 43,18 [1.700] Min.
Minor Diameter — 36,83 - 37,08 [1.450 - 1.460]
Form Diameter, Min. — 42.47 [1.672]
Fillet Radius — 0,64 - 0,76 [.025 - .030]
Tip Radius — 0,25 - 0,51 [.010 - .020]
Finish — 1,6 (63)
Involute Profile Variation — +0,000 -0,025 [+.0000 -.0010]
Total Index Variation — 0,040 [.0016]
Lead Variation — 0,013 [.0005]
Circular Space Width:
- Maximum Actual — 4.105 [.1616]
- Minimum Effective — 3,995 [.1573]
- Maximum Effective — Ref. 4,056 [.1597]
- Minimum Actual — Ref. 4,081 [.1582]

Dimension Between Two Pins — Ref. 34,272 - 34,450 [1.3493 - 1.3563]
Pin Diameter — 4,389 [.1728]

1 Internal spline in mating part to be per spline data. Specification material to be ASTM A304, 8620H carborize to a hardness of 60-64 HRc with case depth (to 50HRc) of 0,076 - 1,02 [.030 - .040]. Dimensions apply after heat treat.

2 Mating part to have critical dimensions as shown. Oil holes must be provided and open for proper oil circulation.

3 Seal to be furnished with motor for proper oil circulation thru splines.

4 Similar to SAE "C" Four Bolt Flange.

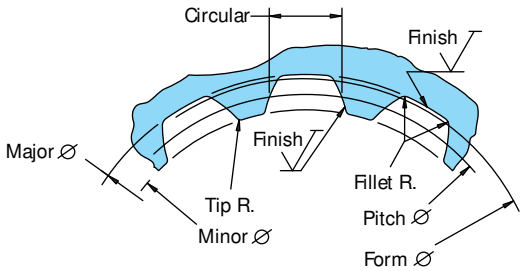

Dimensions — Shafts

VIS 40 Series (SAE)

40 mm Straight

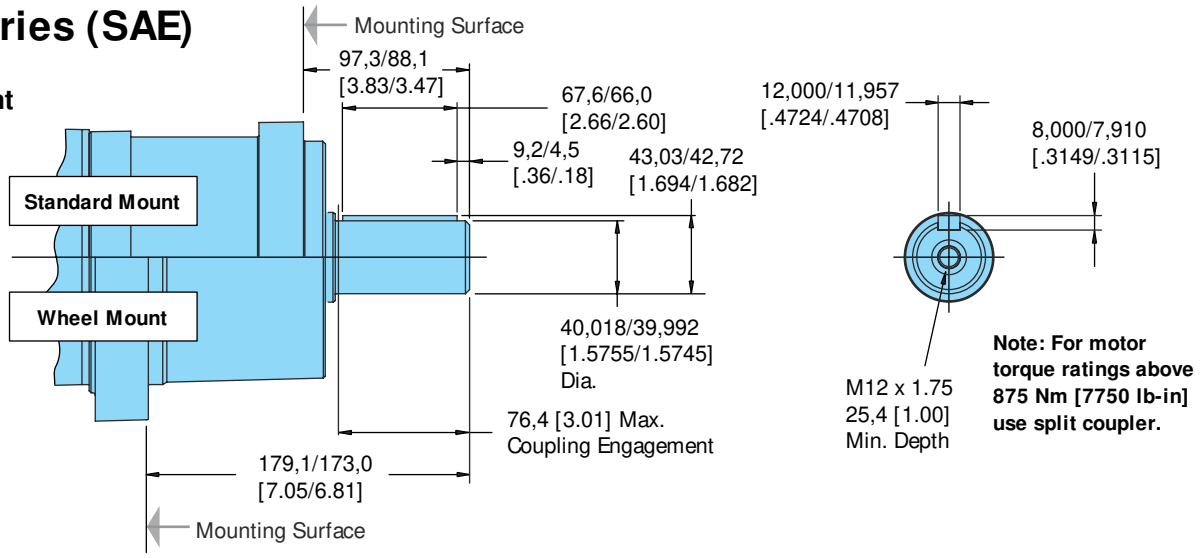

1–1/2 Inch 17 Tooth Splined

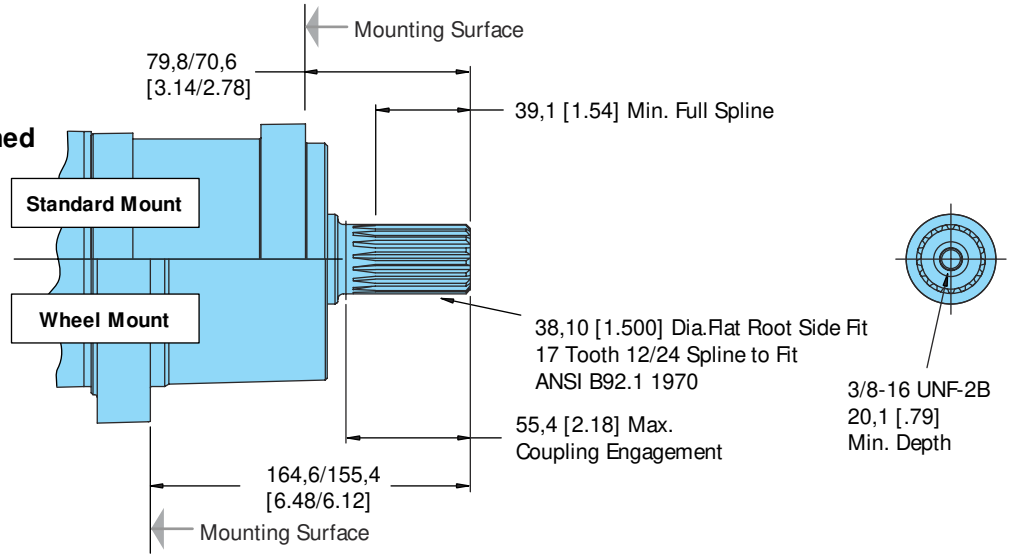

1–3/4 Inch Tapered

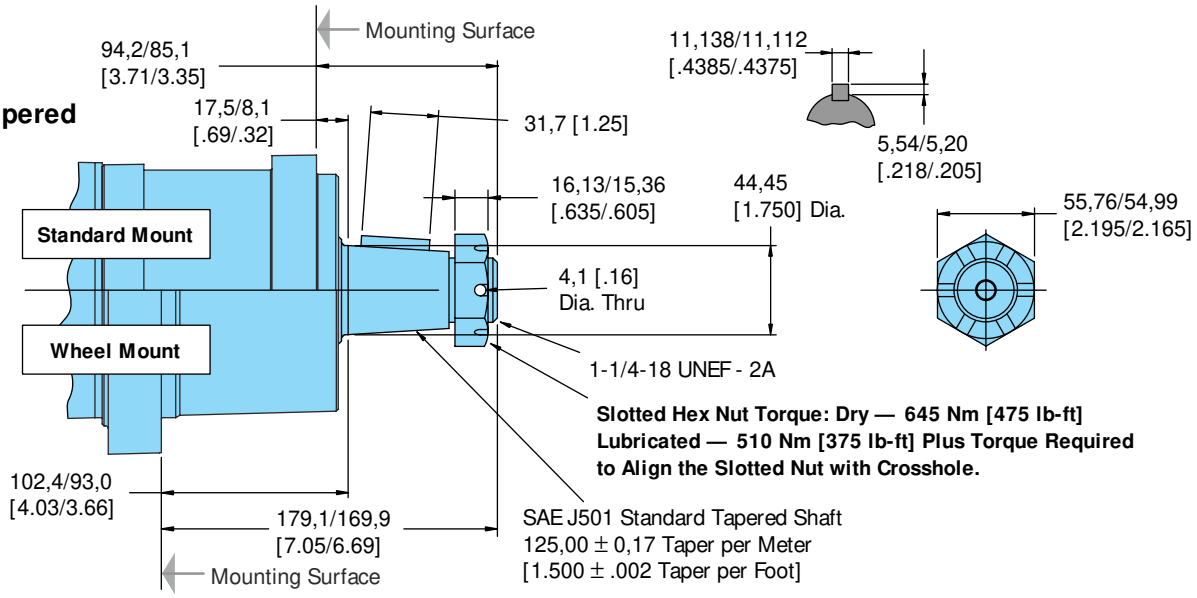

Shaft Side Load Capacity
VIS 40 Series (SAE)

These curves indicate the radial load capacity on the motor shaft(s) at various locations.

The curve is based on B 10 bearing life (2000 hours or 12,000,000 shaft revolutions at 100 RPM) at rated output torque. To determine radial load at speeds other than 100 RPM, multiply the load values given on the bearing curve by the factors in the chart below.

RPM	Multiplication Factor
50	1.23
100	1.00
200	.81
300	.72
400	.66
500	.62
600	.58
700	.56
800	.54

For 3,000,000 shaft revolutions or 500 hours — Increase these shaft loads 52%.

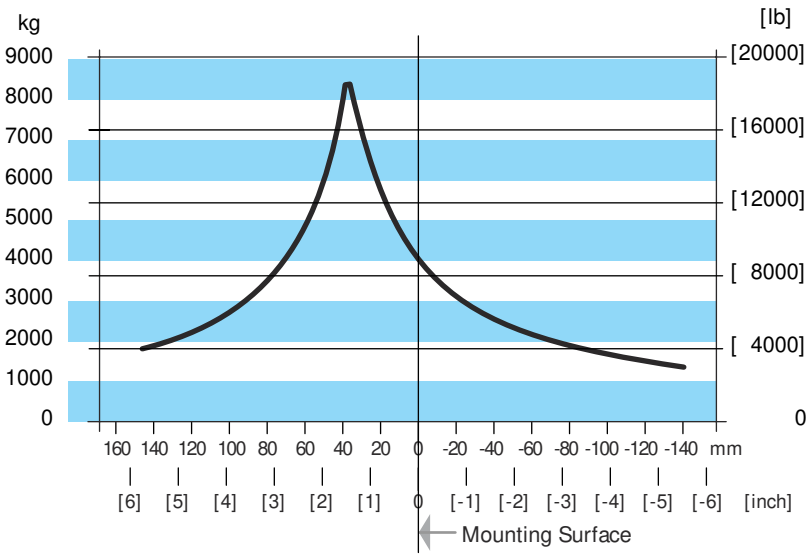

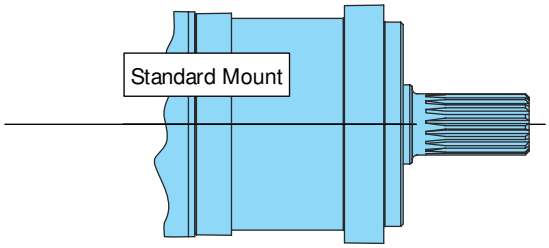

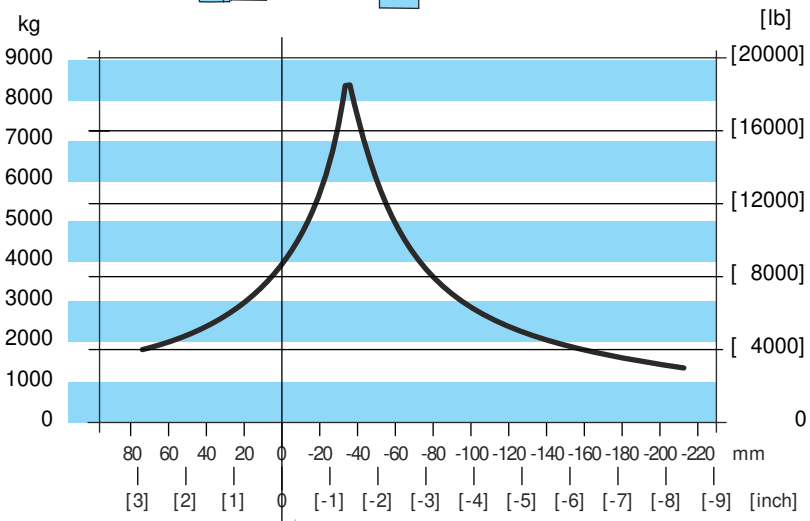

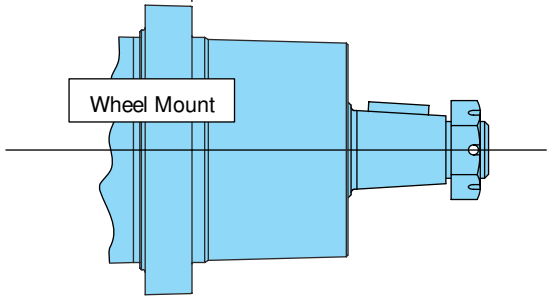

Dimension — Shafts VIS 40 Series

Oversize Flange
224,0 [8.82] B.C.

40 mm Straight

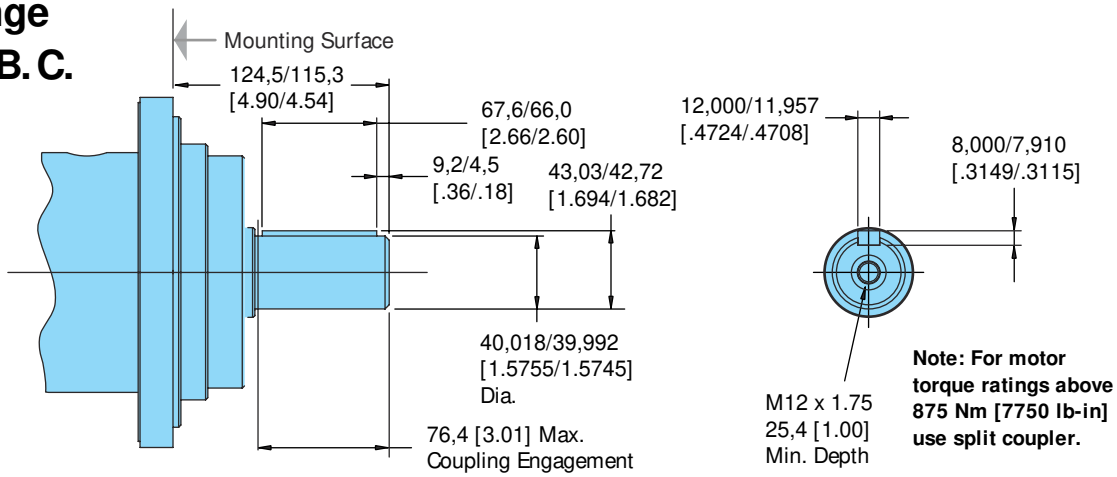

46 mm
28 Tooth Splined

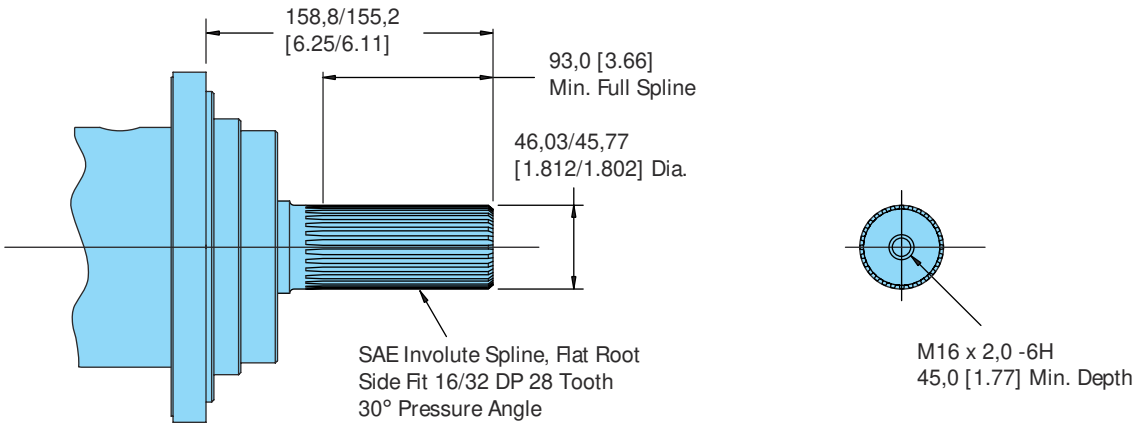

1–3/4 Inch Tapered

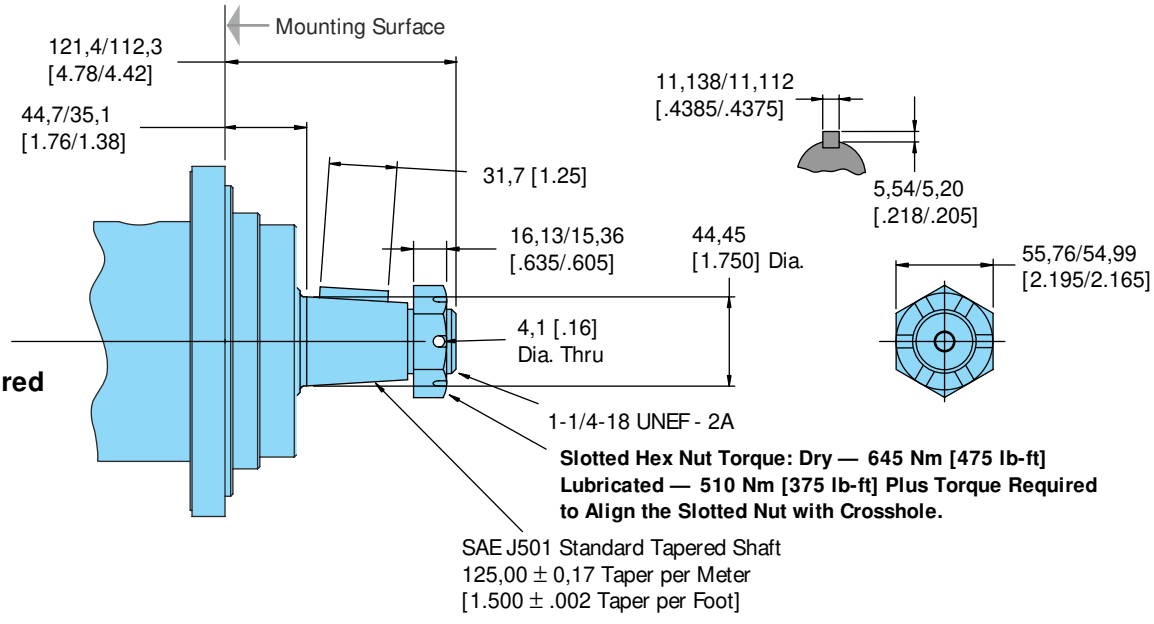

Shaft Side Load Capacity
VIS 40 Series
Oversize Flange
224,0 [8.82] B.C.

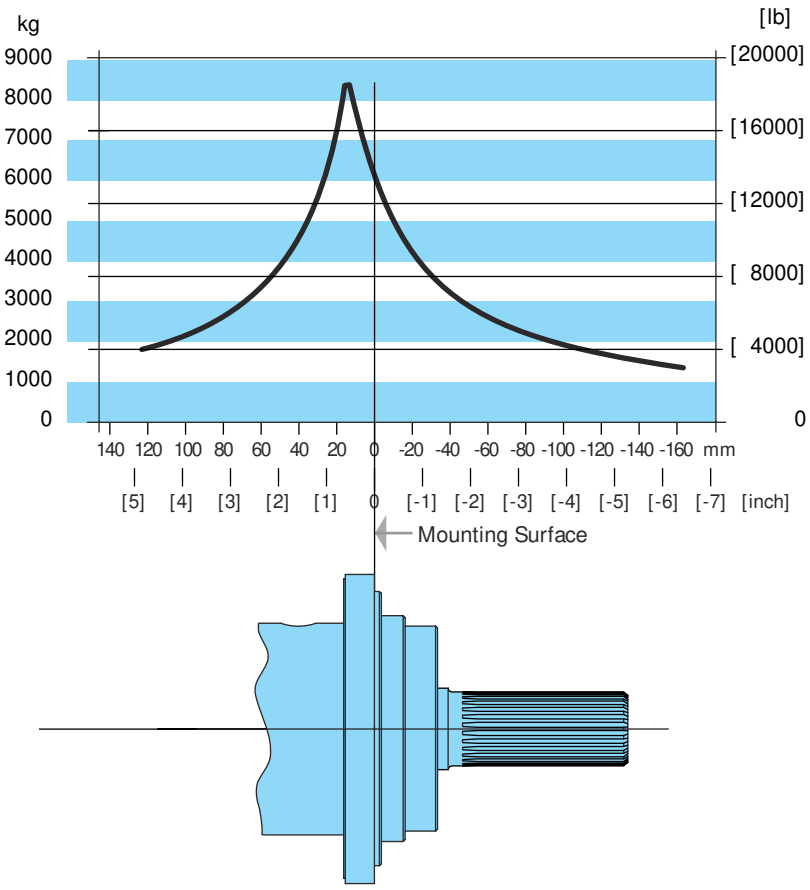

These curves indicate the radial load capacity on the motor shaft(s) at various locations.

The curve is based on B 10 bearing life (2000 hours or 12,000,000 shaft revolutions at 100 RPM) at rated output torque. To determine radial load at speeds other than 100 RPM, multiply the load values given on the bearing curve by the factors in the chart below.

RPM	Multiplication Factor
50	1.23
100	1.00
200	.81
300	.72
400	.66
500	.62
600	.58
700	.56
800	.54

For 3,000,000 shaft revolutions or 500 hours — Increase these shaft loads 52%.

Dimensions — Shafts

VIS 40 Series (ISO)

40 mm Straight

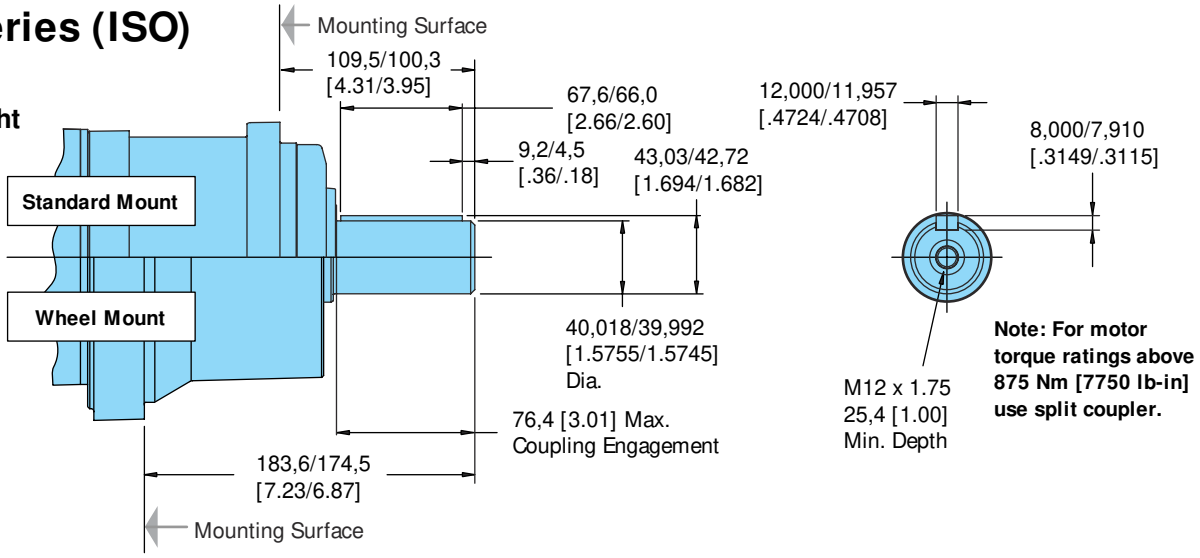

38,1 mm [1–1/2 inch] 17 Tooth Splined

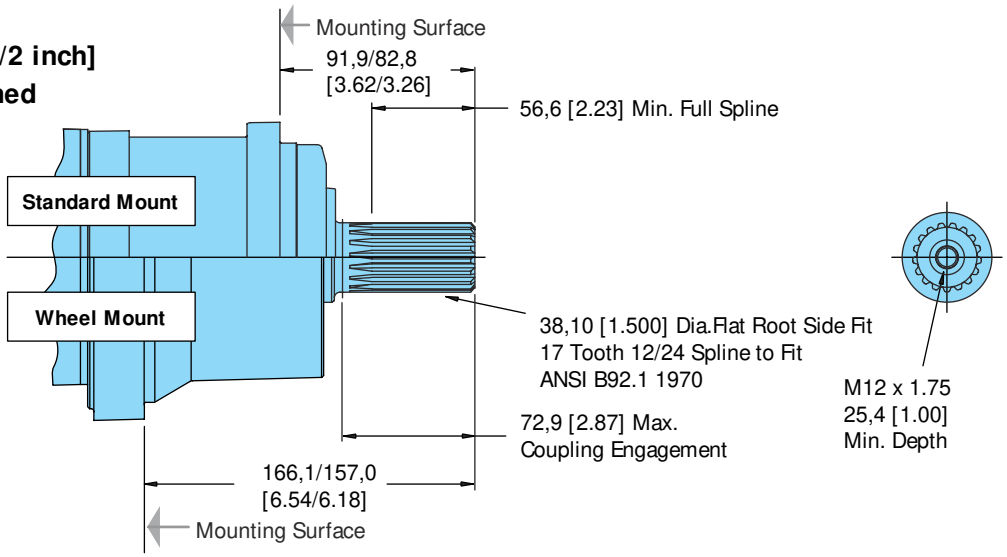

45 mm Tapered

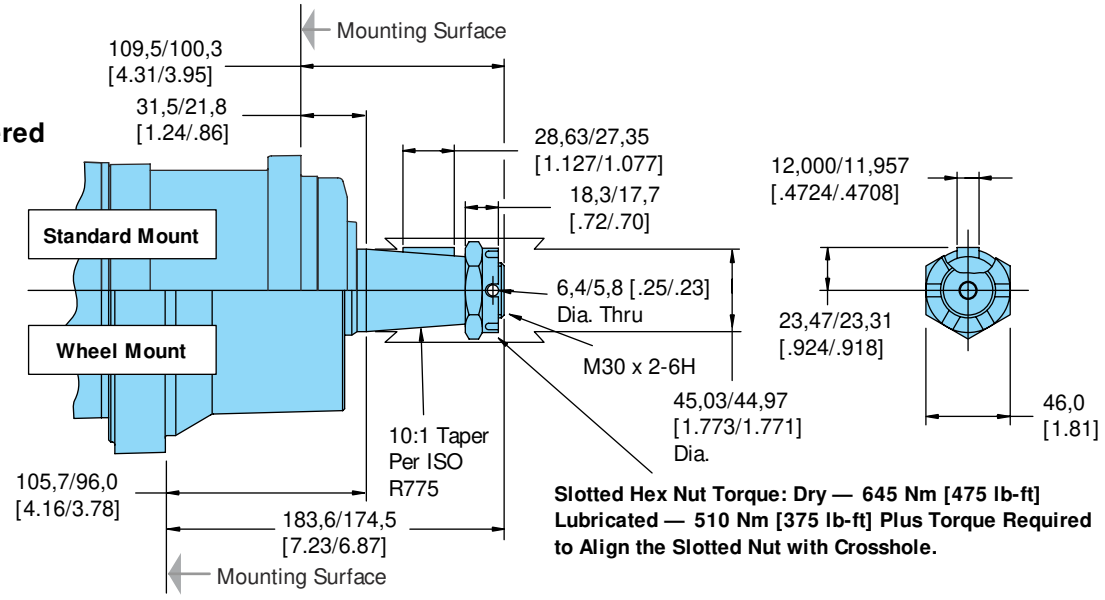

Shaft Side Load Capacity
VIS 40 Series (ISO)

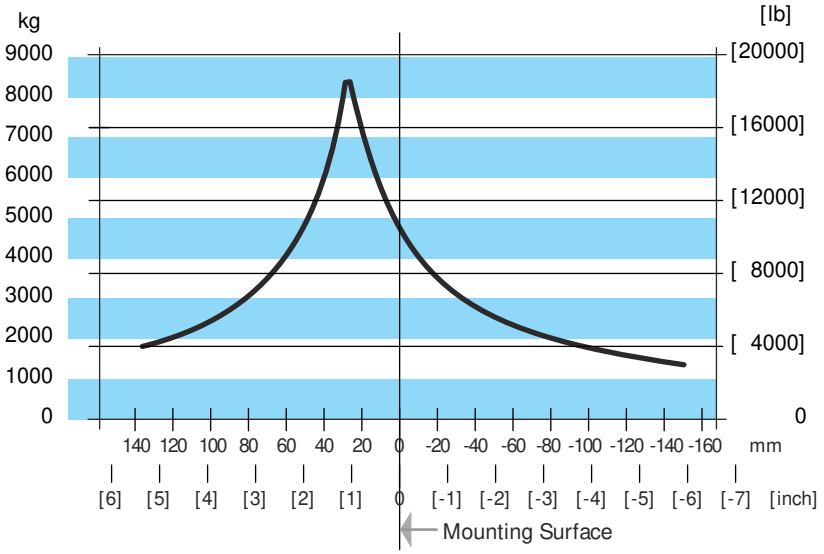

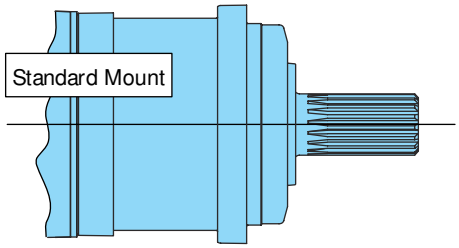

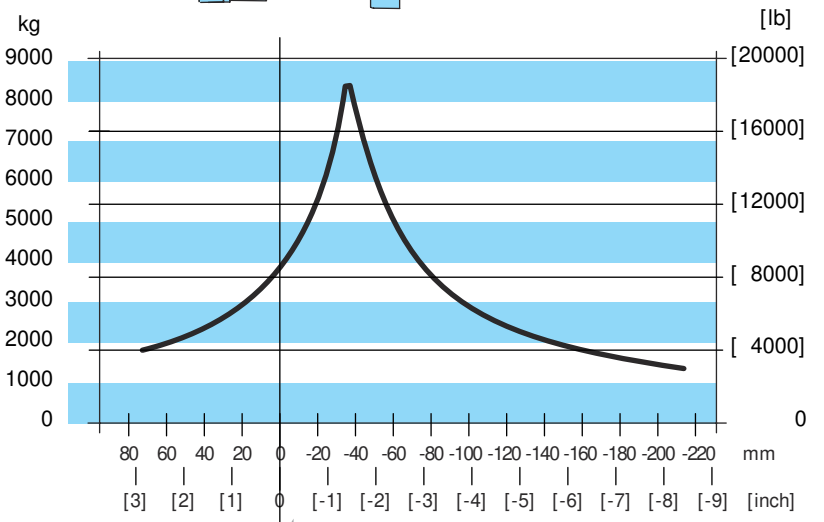

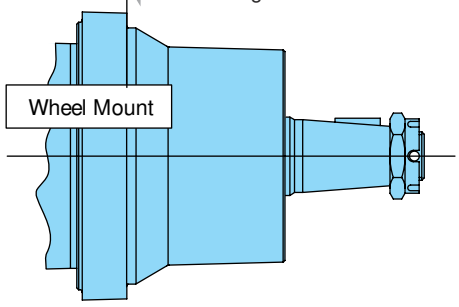

These curves indicate the radial load capacity on the motor shaft(s) at various locations.

The curve is based on B 10 bearing life (2000 hours or 12,000,000 shaft revolutions at 100 RPM) at rated output torque. To determine radial load at speeds other than 100 RPM, multiply the load values given on the bearing curve by the factors in the chart below.

RPM	Multiplication Factor
50	1.23
100	1.00
200	.81
300	.72
400	.66
500	.62
600	.58
700	.56
800	.54

For 3,000,000 shaft revolutions or 500 hours — Increase these shaft loads 52%.

Model Code
VIS 40 Series

The following 16-digit coding system has been developed to identify all of the configuration options for the VIS 40 motor. Use this model code to specify a motor with the desired features. All 16-digits of the code must be present when ordering. You may want to photocopy the matrix below to ensure that each number is entered in the correct box.

Model Code — VIS 40 Motors

1	2	3	4	5	6	7	8	9	10	11	12	13	14	15	16
A	D	L												0	0

Positions 1, 2, 3 **Product Series**

ADL ..... VIS 40 Motor

Positions 4, 5 **Displacement cm³/r [in³/r]**

31 ..... 505 [30.7]

35 ..... 570 [34,9]

38 ..... 630 [38.5]

42 ..... 685 [41.7]

48 ..... 785 [48.0]

57 ..... 940 [57.4]

Position 6 **Mounting Type**

A ..... 4 Bolt Bearingless 127,00 [5.000] Pilot Dia. with 12,19 [.480] Pilot Length and 14,35 [.565] Dia. Holes on 161,92 [6.375] Dia. Bolt Circle

B ..... 4 Bolt Wheel Mount 160 [6.3] Pilot Dia. with 5,8 [.23] Pilot Length and 18,00 [.709] Dia. Holes on 200,00 [7.874] Dia.Bolt Circle (ISO Compatible)

S ..... 4 Bolt Oversize Flange 185,4 [7.30] Rear Pilot Dia., 169,90 [6.689], 139,93 [5.509], 127,0 [5.00] Dia. (Front Pilots) and 18,01 [.709] Dia. Holes on 224,00 [8.819] Dia. Bolt Circle

F ..... 4 Bolt Standard Mount (SAE CC) 127,00 [5.000] Pilot Dia. with 12,2 [.48] Pilot Length and 14,32 [.564] Dia. Holes on 161,92 [6.375] Dia. Bolt Circle

G ..... 4 Bolt Wheel Mount 139,7 [5.50] Pilot Dia. with 7,9 [.31] Pilot Length and 14,32 [.564] Dia. Holes on 184,15 [7.250] Dia.Bolt Circle (SAE Compatible)

H ..... 4 Bolt Standard Mount 125,0 [4.92] Pilot Dia. with 8,9 [.35] Pilot Length and 14,00 [.551] Dia. Holes on 160,00 [6.299] Dia.Bolt Circle (ISO Compatible)

Positions 7, 8 **Output Shaft**

00 ..... None (Bearingless)

01 ..... 45 mm Dia. 10:1 Tapered Shaft Per ISO R775 with M30 x 2-6H Threaded Shaft End, 12W x 8H x 28L [.472W x .313H x 1.102L] Key

02 ..... 1–3/4 inch Dia. .125:1 Tapered Shaft Per SAE J501 with 1-1/4–18 UNEF-2A Threaded Shaft End, 11,11 [.4375] Square x 31,8 [1.25] Straight Key

04 ..... 46 mm Dia. Flat Root Side Fit, 28 Tooth, 16/32 DP 30 Degree Involute Spline, 93,0 [3.66] Minimum Full Spline with M16 x 2,0 -6H Thread in End

07 ..... 40 mm Dia. Straight Shaft with M12 x 1,75-6H Thread in End, 12W x 8H x 63L [.472W x .313H x 2.480L] Key (SAE Compatible)

08 ..... 1–1/2 inch Dia. Flat Root Side Fit, 17 Tooth, 12/24 DP30 Degree Involute Spline, 39,1 [1.54] Minimum Full Spline with 3/8-16 UNC-2B Thread in End (SAE Compatible)

09 ..... 38,1 mm Dia. Flat Root Side Fit, 17 Tooth, 12/24 DP 30 Degree Involute Spline, 56,6 [2.23] Minimum Full Spline with M12 x 1,75 -6H Thread in End (ISO Compatible)

10 ..... 40 mm Dia. Straight Shaft with M12 x 1,75-6H Thread in End, 12W x 8H x 67L [.472W x .313H x 2.630L] Key (ISO Compatible)

Position 9 **Ports**

A ..... 1–1/16-12 UN-2B Size 12 O-ring Port, Accepts Fittings for SAE J1926

B ..... G3/4 (BSP) Straight Thread Port

Position 10 **Case Flow Options**

A ..... Shuttle Valve with 9/16-18 UNF-2B, Size 6 O-ring Port Case Drain, Accepts Fittings for SAE J1926

B ..... Shuttle Valve with G1/4 (BSP) Straight Thread Port Case Drain

Position 11 **Back-Pressure Relief**

0 ..... None (for Open Loop Only)*

1 ..... Set at 4,5 bar [65 PSI] (for Manual Pumps)

2 ..... Set at 15,2 bar [220 PSI] (for Servo Pumps)

Positions 12, 13 **Special Features**

00 ..... None

Position 14 **Paint/ Special Packaging**

0 ..... No Paint, Individual Box

A ..... Painted Low Gloss Black, Individual Box

B ..... No Paint, Bulk Box Option

C ..... Painted Low Gloss Black, Bulk Box Option

Position 15 **Eaton Assigned Code when Applicable**

0 ..... Assigned Code

Position 16 **Eaton Assigned Design Code**

B ..... Assigned Design Code

* For Open Loop

- **VIS motors must have a case drain to tank.**
- **The maximum case pressure for the VIS motor is 3,5 bar [50 PSI].**
- **VIS motors in an open loop circuit must have 3,5 bar [50 PSI] greater return pressure than the pressure in the case to properly lubricate the internal drive (see page 9).**

Specifications
VIS 45 Series

VIS 45

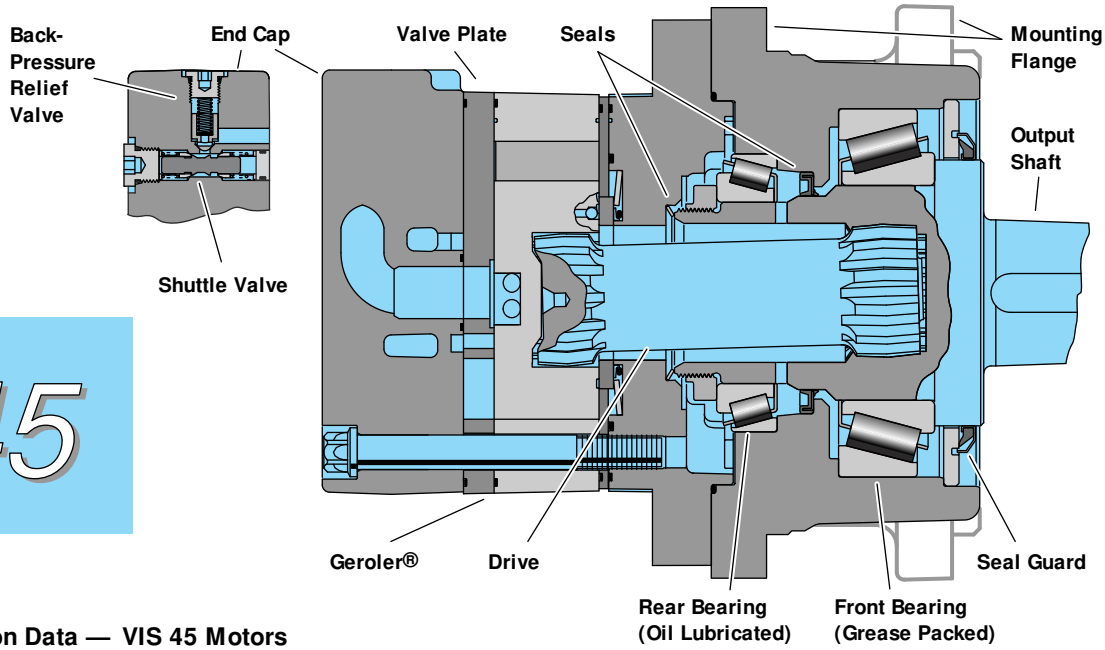

Theoretical Specification Data — VIS 45 Motors
(for Efficiency Corrected Data see Performance Charts)

Displ. cm³/r [in³/r]		630 [38.6]	805 [48,6]	990 [60.5]	1245 [76.0]	1560 [95.0]
Theo. Max. Speed (RPM) @ ..... Flow	Continuous	269	214	172	137	109
	Intermittent	299	237	191	152	121
Flow l/min [GPM]	Continuous	170 [45]	170 [45]	170 [45]	170 [45]	170 [45]
	Intermittent	189 [50]	189 [50]	189 [50]	189 [50]	189 [50]
Theo. Torque Nm [lb-in]	Continuous	3123 [27645]	3932 [34800]	4068 [36010]	4065 [35985]	4065 [35985]
	Intermittent	3470 [30720]	4370 [38675]	5086 [45015]	5084 [45000]	5082 [44980]
Pressure Δ bar [Δ PSI]	Continuous	310 [4500]	210 [4500]	258 [3740]	205 [2975]	164 [2380]
	Intermittent	345 [5000]	345 [5000]	322 [4675]	256 [3720]	205 [2975]
	Peak	379 [5500]	379 [5500]	379 [5500]	308 [4465]	246 [3570]

A simultaneous maximum torque and maximum speed NOT recommended.

Maximum Inlet Pressure — 400 bar [5800 PSI]. **Do Not Exceed A Pressure Rating** (for displacement size see chart above).

Return Pressure (Back-Pressure):

Minimum — 3,5 bar [50 PSI]

Maximum — 21 bar [300 PSI]

Note — Return (back-pressure) must be 3,5 bar [50 PSI] greater than the case pressure.

Case Pressure:

Minimum — No Pressure

Maximum — 3,5 bar [50 PSI]

Note — The case must be full when the motor is operating (case drain out the top). A case drain is required.

Δ Pressure — The true Δ bar [Δ PSI] between inlet port and outlet port.

Continuous Rating — Motor may be run continuously at these ratings.

Intermittent Operation — 10% of every minute.

Peak Operation — 1% of every minute.

Recommended Fluids — Premium quality, anti-wear type hydraulic oil with a viscosity of not less than 70 SUS at operating temperature.

Recommended Maximum System Operating Temp. — Is 82° C [180° F]

Recommended Filtration — per ISO Cleanliness Code, level 18/13

Shuttle — Standard

Back-Pressure Relief Valve — Required for closed loop circuit.

To assure best motor life, run motor for approximately one hour at 30% of rated pressure before application to full load. Be sure motor is filled with fluid prior to any load applications.

Performance Data
VIS 45 Series

Motors run with high efficiency in all areas designated with a number for torque and speed, *however for best motor life select a motor to run with a torque and speed range printed in the white background area.*

Continuous

Intermittent

VIS 45 - 630 cm3/r [38.6 in3/r]

Δ Pressure

		PSI	250	500	1000	1500	2000	2500	3000	3500	4000	4500	5000
		bar	**15**	**35**	**70**	**105**	**140**	**170**	**205**	**240**	**275**	**310**	**345**
	4		1270	2710	5530	8250	10300	12900	15540	17720	20820	23640	25740
			144	*306*	*625*	*932*	*1164*	*1458*	*1756*	*2002*	*2353*	*2671*	*2909*
	15		**23**	**23**	**23**	**22**	**22**	**21**	**20**	**19**	**18**	**17**	**15**
	8		1290	2720	5580	8290	10490	13110	15760	18070	21000	24100	26070
			146	*307*	*631*	*937*	*1185*	*1481*	*1781*	*2042*	*2373*	*2723*	*2946*
Flow	**30**		**47**	**45**	**45**	**45**	**45**	**44**	**43**	**41**	**38**	**36**	**34**
GPM	12		1310	2670	5440	8320	10820	13400	16370	18970	21230	24540	26840
l/min			*148*	*302*	*615*	*940*	*1223*	*1514*	*1850*	*2144*	*2399*	*2773*	*3033*
	45		**71**	**68**	**68**	**67**	**67**	**66**	**64**	**62**	**61**	**58**	**54**
	16		1320	2600	5400	8250	10910	13730	16780	19710	21970	24870	27530
			149	*294*	*610*	*932*	*1233*	*1551*	*1896*	*2227*	*2483*	*2810*	*3111*
	61		**95**	**91**	**91**	**89**	**89**	**88**	**85**	**83**	**81**	**77**	**72**
	20		1290	2500	5270	8020	10690	13400	16730	20020	22320	25420	
			146	*283*	*596*	*906*	*1208*	*1514*	*1890*	*2262*	*2522*	*2872*	
	76		**119**	**114**	**114**	**113**	**113**	**111**	**108**	**104**	**103**	**97**	
	24		1240	2440	5200	7920	10560	13430	16700	19970	22610	25730	
			140	*276*	*588*	*895*	*1193*	*1518*	*1887*	*2257*	*2555*	*2907*	
	91		**143**	**137**	**137**	**135**	**135**	**133**	**129**	**125**	**123**	**117**	
	28			2190	5050	7870	10520	13480	16660	19860	22450	26080	
				247	*571*	*889*	*1189*	*1523*	*1883*	*2244*	*2537*	*2963*	
	106			**160**	**160**	**157**	**157**	**155**	**150**	**146**	**143**	**136**	
	32			2110	4870	7720	10300	13230	16370	19720	22320	25986	
				238	*550*	*872*	*1164*	*1495*	*1850*	*2228*	*2522*	*2936*	
	121			**182**	**182**	**180**	**180**	**177**	**172**	**166**	**164**	**156**	
	36			2090	4550	7330	10030	12890	15960	19220	22040	25655	
				236	*514*	*828*	*1133*	*1457*	*1803*	*2172*	*2491*	*2898*	
	136			**205**	**205**	**202**	**202**	**199**	**193**	**187**	**184**	**175**	
	40				4150	7120	9760	12490	15560	18820	21600	25185	
					469	*805*	*1103*	*1411*	*1758*	*2127*	*2441*	*2845*	
	151				**228**	**224**	**224**	**221**	**214**	**208**	**204**	**194**	
	45				3970	6930	9500	12230	15340	18470	21207	24742	
					449	*783*	*1074*	*1382*	*1733*	*2087*	*2396*	*2795*	
	170				**256**	**252**	**252**	**249**	**241**	**234**	**229**	**218**	
	50				3680	6660	9270	11920	15150	18300			
					416	*753*	*1048*	*1347*	*1712*	*2068*			
	189				**284**	**280**	**280**	**276**	**268**	**259**			

18300	Torque (lb-in)
2068	*Torque (Nm)*
259	**Speed (RPM)**

VIS 45 - 805 cm3/r [48.6 in3/r]

Δ Pressure

		PSI	250	500	1000	1500	2000	2500	3000	3500	4000	4500	5000
		bar	**15**	**35**	**70**	**105**	**140**	**170**	**205**	**240**	**275**	**310**	**345**
	4		1600	3350	7180	10670	13480	16640	19680	21740	25860	28500	31720
			181	*379*	*811*	*1206*	*1523*	*1880*	*2224*	*2457*	*2922*	*3221*	*3584*
	15		**19**	**18**	**17**	**17**	**17**	**17**	**16**	**15**	**14**	**13**	**12**
	8		1620	3380	7240	10730	13740	16920	19950	22160	25920	28970	32200
			183	*382*	*818*	*1212*	*1553*	*1912*	*2254*	*2504*	*2929*	*3274*	*3639*
Flow	**30**		**38**	**36**	**35**	**34**	**34**	**34**	**34**	**34**	**32**	**31**	**29**
GPM	12		1640	3310	7180	10770	14170	17290	20730	23270	26340	29420	32470
l/min			*185*	*374*	*811*	*1217*	*1601*	*1954*	*2342*	*2630*	*2976*	*3324*	*3669*
	45		**56**	**55**	**52**	**52**	**51**	**51**	**50**	**50**	**49**	**47**	**45**
	16		1660	3220	7010	10680	14290	17710	21240	24170	26830	30340	32940
			188	*364*	*792*	*1207*	*1615*	*2001*	*2400*	*2731*	*3032*	*3428*	*3722*
	61		**76**	**74**	**71**	**70**	**69**	**69**	**68**	**68**	**67**	**64**	**60**
	20		1600	3110	6840	10380	14000	17290	20990	24490	27270	31390	
			181	*351*	*773*	*1173*	*1582*	*1954*	*2372*	*2767*	*3082*	*3547*	
	76		**95**	**92**	**88**	**87**	**86**	**86**	**85**	**85**	**84**	**80**	
	24		1560	3030	6750	10250	13830	17340	21110	24450	27620	31460	
			176	*342*	*763*	*1158*	*1563*	*1959*	*2385*	*2763*	*3121*	*3555*	
	91		**114**	**110**	**105**	**104**	**103**	**103**	**102**	**102**	**101**	**96**	
	28			2720	6560	10190	13780	17390	21090	24360	27420	31238	
				307	*741*	*1151*	*1557*	*1965*	*2383*	*2753*	*3098*	*3529*	
	106			**128**	**123**	**121**	**120**	**120**	**119**	**119**	**117**	**111**	
	32			2620	6330	10000	13480	17070	20730	24180	27270	31064	
				296	*715*	*1130*	*1523*	*1929*	*2342*	*2732*	*3082*	*3509*	
	121			**147**	**140**	**139**	**137**	**137**	**135**	**135**	**134**	**127**	
	36			2620	5910	9480	13140	16640	20200	23570	26910	30646	
				296	*668*	*1071*	*1485*	*1880*	*2283*	*2663*	*3041*	*3462*	
	136			**165**	**158**	**156**	**154**	**154**	**152**	**152**	**150**	**143**	
	40				5390	9220	12790	16120	19700	23080	26343	30019	
					609	*1042*	*1445*	*1822*	*2226*	*2608*	*2976*	*3391*	
	151				**175**	**173**	**171**	**171**	**169**	**169**	**167**	**159**	
	45				5150	8970	12450	15780	19420	22650	25848	29462	
					582	*1014*	*1407*	*1783*	*2194*	*2559*	*2920*	*3328*	
	170				**198**	**196**	**193**	**193**	**191**	**191**	**189**	**179**	
	50				4770	8610	12140	15380	19180	22440			
					539	*973*	*1372*	*1738*	*2167*	*2536*			
	189				**220**	**217**	**215**	**215**	**212**	**212**			

22440	Torque (lb-in)
2536	*Torque (Nm)*
212	**Speed (RPM)**

Performance data is typical at 120 SUS. Actual data may vary slightly from unit to unit in production

Performance Data
VIS 45 Series

Motors run with high efficiency in all areas designated with a number for torque and speed, *however for best motor life select a motor to run with a torque and speed range printed in the white background area.*

Continuous

Intermittent

VIS 45 - 990 cm3/r [60.5 in3/r]

Δ Pressure

Flow GPM / l/min	PSI / bar	250 / 15	500 / 35	1000 / 70	1500 / 105	2000 / 140	2500 / 170	3000 / 205	3500 / 240	4000 / 275	4500 / 310	4750 / 330
4 / 15		2000 / *226* / **15**	4100 / *463* / **15**	8630 / *975* / **15**	12620 / *1426* / **15**	16050 / *1814* / **14**	20080 / *2269* / **14**	24150 / *2729* / **14**	28320 / *3200* / **13**	32590 / *3683* / **12**	35150 / *3972* / **11**	37040 / *4186* / **10**
8 / 30		2020 / *228* / **30**	4130 / *467* / **30**	8700 / *983* / **29**	12740 / *1440* / **29**	16350 / *1848* / **29**	20420 / *2307* / **28**	24480 / *2766* / **28**	28400 / *3209* / **27**	32850 / *3712* / **25**	35670 / *4031* / **25**	37250 / *4209* / **24**
12 / 45		2050 / *232* / **45**	4050 / *458* / **45**	8630 / *975* / **45**	12780 / *1444* / **44**	16870 / *1906* / **44**	20860 / *2357* / **43**	25440 / *2875* / **43**	28550 / *3226* / **41**	32920 / *3720* / **41**	35860 / *4052* / **40**	37630 / *4252* / **39**
16 / 61		2070 / *234* / **61**	3940 / *445* / **61**	8420 / *951* / **60**	12680 / *1433* / **58**	17010 / *1922* / **58**	21380 / *2416* / **58**	26070 / *2946* / **57**	29660 / *3352* / **55**	33020 / *3731* / **55**	36620 / *4138* / **54**	38439 / *4342* / **53**
20 / 76		2000 / *226* / **76**	3800 / *429* / **76**	8220 / *929* / **75**	12330 / *1393* / **73**	16660 / *1883* / **73**	20860 / *2357* / **72**	25760 / *2911* / **71**	30060 / *3397* / **69**	33550 / *3791* / **69**	37880 / *4280* / **68**	39766 / *4492* / **66**
24 / 91		1950 / *220* / **91**	3700 / *418* / **91**	8120 / *918* / **90**	12180 / *1376* / **88**	16460 / *1860* / **88**	20890 / *2361* / **86**	25820 / *2918* / **85**	30090 / *3400* / **83**	33990 / *3841* / **83**	38366 / *4334* / **82**	40269 / *4549* / **80**
28 / 106			3320 / *375* / **105**	7880 / *890* / **102**	12100 / *1367* / **102**	16400 / *1853* / **101**	20990 / *2372* / **99**	25890 / *2926* / **97**	29900 / *3379* / **97**	33750 / *3814* / **95**	39106 / *4280* / **92**	39995 / *4518* / **90**
32 / 121			3210 / *363* / **120**	7610 / *860* / **117**	11870 / *1341* / **117**	16050 / *1814* / **115**	20600 / *2328* / **114**	25440 / *2875* / **110**	29680 / *3354* / **110**	33550 / *3791* / **109**	37890 / *4280* / **106**	39766 / *4492* / **103**
36 / 136			3200 / *362* / **135**	7100 / *802* / **131**	11260 / *1272* / **131**	15640 / *1767* / **130**	20080 / *2269* / **128**	24800 / *2802* / **124**	28930 / *3269* / **124**	32716 / *3696* / **123**	36936 / *4173* / **119**	38759 / *4379* / **116**
40 / 151				6480 / *732* / **146**	10950 / *1237* / **146**	15220 / *1720* / **144**	19460 / *2199* / **142**	24170 / *2731* / **138**	28330 / *3201* / **138**	32023 / *3618* / **137**	36155 / *4084* / **133**	37935 / *4286* / **130**
45 / 170				6190 / *699* / **164**	10650 / *1203* / **164**	14810 / *1674* / **162**	19040 / *2152* / **160**	23830 / *2693* / **155**	27952 / *3158* / **155**	31599 / *3570* / **154**	35679 / *4031* / **149**	37432 / *4229* / **145**
50 / 189				5740 / *649* / **183**	10230 / *1156* / **183**	14450 / *1633* / **180**	18570 / *2098* / **178**	23540 / *2660* / **173**				

23540 Torque (lb-in)
2660 Torque (Nm)
173 Speed (RPM)

VIS 45 - 1245 cm3/r [76.0 in3/r]

Δ Pressure

Flow GPM / l/min	PSI / bar	250 / 15	500 / 35	1000 / 70	1500 / 105	2000 / 140	2500 / 170	3000 / 205	3500 / 240	4000 / 275	4250 / 295
4 / 15		2160 / *244* / **12**	4800 / *542* / **11**	9960 / *1125* / **11**	15150 / *1712* / **11**	20200 / *2283* / **11**	26450 / *2989* / **10**	30670 / *3466* / **10**	39180 / *4427* / **9**	42800 / *4836* / **9**	43220 / *4884* / **9**
8 / 30		2250 / *254* / **24**	4830 / *546* / **23**	10370 / *1172* / **22**	15760 / *1781* / **22**	22010 / *2487* / **21**	27180 / *3071* / **20**	33330 / *3766* / **20**	39840 / *4502* / **19**	43660 / *4934* / **19**	44400 / *5017* / **19**
12 / 45		2400 / *271* / **36**	5390 / *609* / **33**	10910 / *1233* / **33**	17290 / *1954* / **32**	22780 / *2574* / **32**	28470 / *3217* / **32**	34170 / *3861* / **32**	40140 / *4536* / **31**	44160 / *4990* / **31**	47220 / *5336* / **30**
16 / 61		2410 / *272* / **48**	5150 / *582* / **46**	10930 / *1235* / **45**	16970 / *1918* / **44**	22880 / *2585* / **43**	28600 / *3232* / **43**	33900 / *3831* / **43**	39500 / *4464* / **42**	44510 / *5030* / **41**	47592 / *5376* / **40**
20 / 76		2350 / *266* / **60**	4890 / *553* / **59**	10650 / *1203* / **57**	16470 / *1861* / **56**	21960 / *2481* / **56**	27450 / *3102* / **56**	33130 / *3744* / **55**	37710 / *4261* / **55**	43890 / *4960* / **54**	46933 / *5302* / **52**
24 / 91		2190 / *247* / **72**	4760 / *538* / **70**	10460 / *1182* / **68**	15920 / *1799* / **67**	21230 / *2399* / **67**	26530 / *2998* / **67**	32320 / *3652* / **66**	37680 / *4258* / **66**	42670 / *4822* / **65**	45673 / *5156* / **63**
28 / 106		1990 / *225* / **85**	4260 / *481* / **82**	10070 / *1138* / **80**	15860 / *1792* / **78**	21200 / *2396* / **78**	26420 / *2985* / **78**	32480 / *3670* / **77**	37500 / *4238* / **77**	42464 / *4797* / **76**	45418 / *5131* / **74**
32 / 121			4100 / *463* / **94**	9770 / *1104* / **91**	15410 / *1741* / **90**	20770 / *2347* / **89**	26300 / *2972* / **89**	31920 / *3607* / **88**	37240 / *4208* / **88**	42167 / *4764* / **87**	45103 / *5095* / **84**
36 / 136			4090 / *462* / **106**	9060 / *1024* / **103**	14650 / *1655* / **101**	20060 / *2267* / **101**	25670 / *2901* / **100**	31110 / *3515* / **99**	36295 / *4100* / **99**	41087 / *4642* / **98**	43955 / *4966* / **95**
40 / 151				8300 / *938* / **114**	14150 / *1599* / **113**	19570 / *2211* / **112**	24900 / *2814* / **111**	30320 / *3426* / **110**	35373 / *3996* / **110**	40034 / *4523* / **108**	42836 / *4839* / **105**
45 / 170				8100 / *915* / **129**	13970 / *1579* / **127**	19310 / *2182* / **126**	24610 / *2781* / **125**	29972 / *3686* / **124**	34967 / *3950* / **124**	39570 / *4470* / **122**	42343 / *4783* / **118**
50 / 189				7900 / *893* / **143**	13790 / *1558* / **141**	19050 / *2153* / **140**	24310 / *2747* / **139**				

24310 Torque (lb-in)
2747 Torque (Nm)
139 Speed (RPM)

Performance data is typical at 120 SUS. Actual data may vary slightly from unit to unit in production

Performance Data
VIS 45 Series

Motors run with high efficiency in all areas designated with a number for torque and speed, *however for best motor life select a motor to run with a torque and speed range printed in the white background area.*

Continuous

Intermittent

VIS 45 - 1560 cm3/r [95.0 in3/r] **Δ Pressure**

Flow		PSI	250	500	1000	1500	2000	2500	3000	3500	4000
		bar	**15**	**35**	**70**	**105**	**140**	**170**	**205**	**240**	**275**
GPM	4		2700	5670	11910	18520	24910	30860	37610	42320	48366
l/min			*305*	*641*	*1346*	*2093*	*2815*	*3487*	*4250*	*4782*	*5464*
	15		**9**	**9**	**9**	**9**	**9**	**8**	**8**	**8**	**8**
	8		2810	5910	12400	19260	25590	31740	39310	44150	50457
			318	*668*	*1401*	*2176*	*2892*	*3587*	*4442*	*4989*	*5700*
	30		**19**	**19**	**18**	**18**	**18**	**17**	**16**	**15**	**15**
	12		3010	6300	13040	20490	26600	33070	39880	46670	53337
			340	*712*	*1474*	*2315*	*3006*	*3737*	*4506*	*5274*	*6025*
	45		**29**	**28**	**28**	**27**	**26**	**25**	**23**	**22**	**22**
	16		3020	6300	13360	20740	27270	33950	40450	48630	55577
			341	*712*	*1510*	*2344*	*3082*	*3836*	*4571*	*5495*	*6279*
	61		**38**	**38**	**37**	**36**	**35**	**34**	**31**	**29**	**29**
	20		2930	6150	13200	20490	27110	34830	39820	47662	54470
			331	*695*	*1492*	*2315*	*3063*	*3936*	*4500*	*5384*	*6154*
	76		**48**	**47**	**46**	**45**	**44**	**42**	**39**	**37**	**37**
	24		2780	5910	12880	19750	26930	34390	39310	47300	54057
			314	*668*	*1455*	*2232*	*3043*	*3886*	*4442*	*5343*	*6107*
	91		**58**	**56**	**55**	**54**	**53**	**50**	**47**	**44**	**44**
	28			5310	12500	19630	26600	33950	38740	46635	53297
				600	*1413*	*2218*	*3006*	*3836*	*4378*	*5268*	*6021*
	106			**66**	**64**	**63**	**62**	**59**	**55**	**52**	**52**
	32			5120	12070	19260	26260	33510	38180	45982	52550
				579	*1364*	*2176*	*2967*	*3787*	*4314*	*5195*	*5937*
	121			**75**	**74**	**72**	**70**	**67**	**62**	**58**	**58**
	36			5100	11270	18270	25590	33070	37652	45366	
				576	*1274*	*2065*	*2892*	*3737*	*4254*	*5125*	
	136			**85**	**83**	**81**	**79**	**76**	**70**	**66**	
	40				10280	17760	24910	32630	37124	44750	
					1162	*2007*	*2815*	*3687*	*4194*	*5055*	
	151				**92**	**90**	**88**	**84**	**78**	**73**	
	45				9820	17280	24240	31793	36119	43577	
					1110	*1953*	*2739*	*3592*	*4080*	*4923*	
	170				**104**	**101**	**99**	**95**	**87**	**82**	
	50				9100	16600	23650				
					1028	*1876*	*2672*				
	189				**115**	**113**	**110**				

23650	Torque (lb-in)
2672	*Torque (Nm)*
110	**Speed (RPM)**

Performance data is typical at 120 SUS. Actual data may vary slightly from unit to unit in production

Dimensions —
VIS 45 Series (Standard Mount)

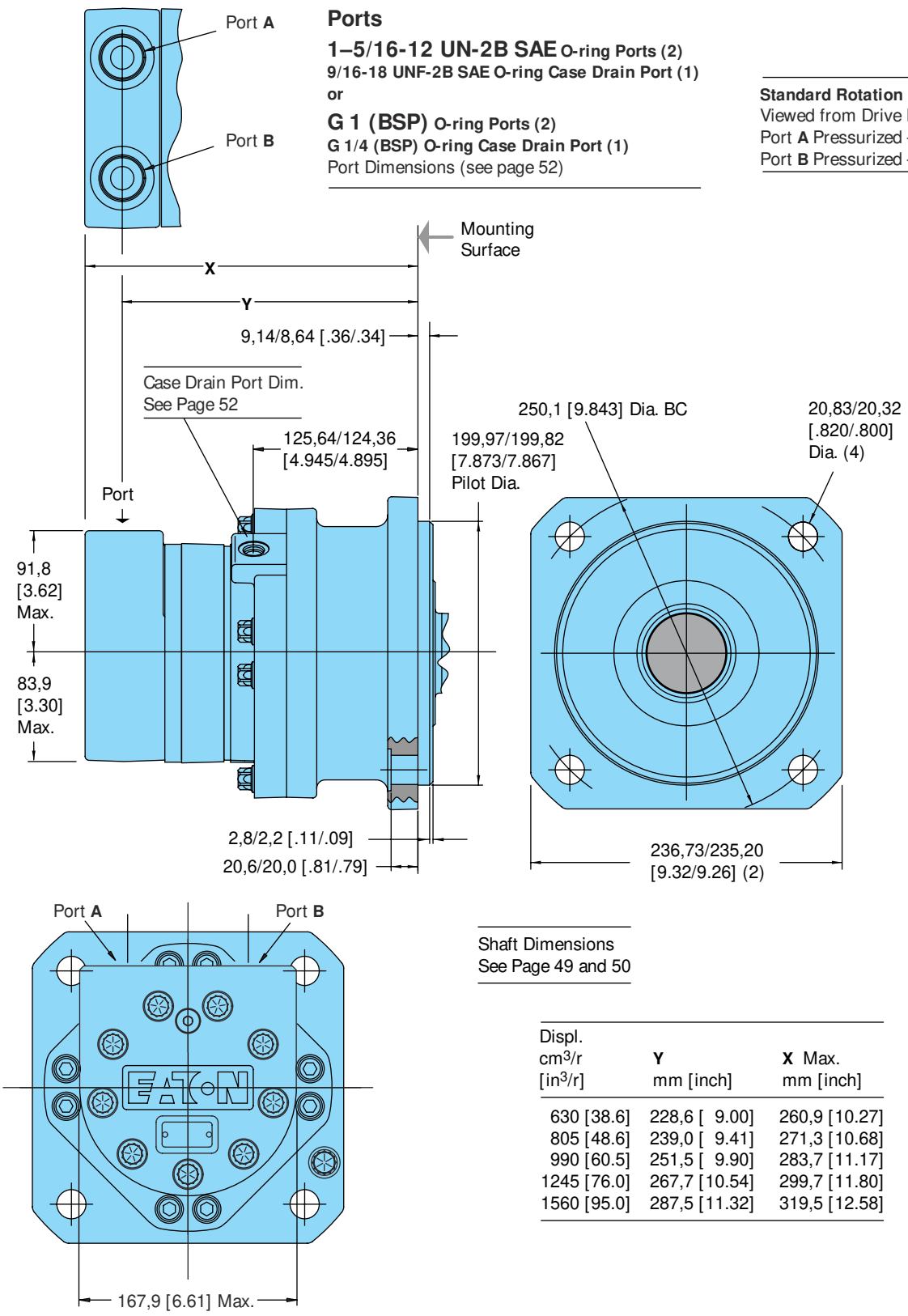

Shaft Dimensions
See Page 49 and 50

Displ. cm^3/r [in^3/r]	Y mm [inch]	X Max. mm [inch]
630 [38.6]	228,6 [9.00]	260,9 [10.27]
805 [48.6]	239,0 [9.41]	271,3 [10.68]
990 [60.5]	251,5 [9.90]	283,7 [11.17]
1245 [76.0]	267,7 [10.54]	299,7 [11.80]
1560 [95.0]	287,5 [11.32]	319,5 [12.58]

Dimensions —
VIS 45 Series (Wheel Mount)

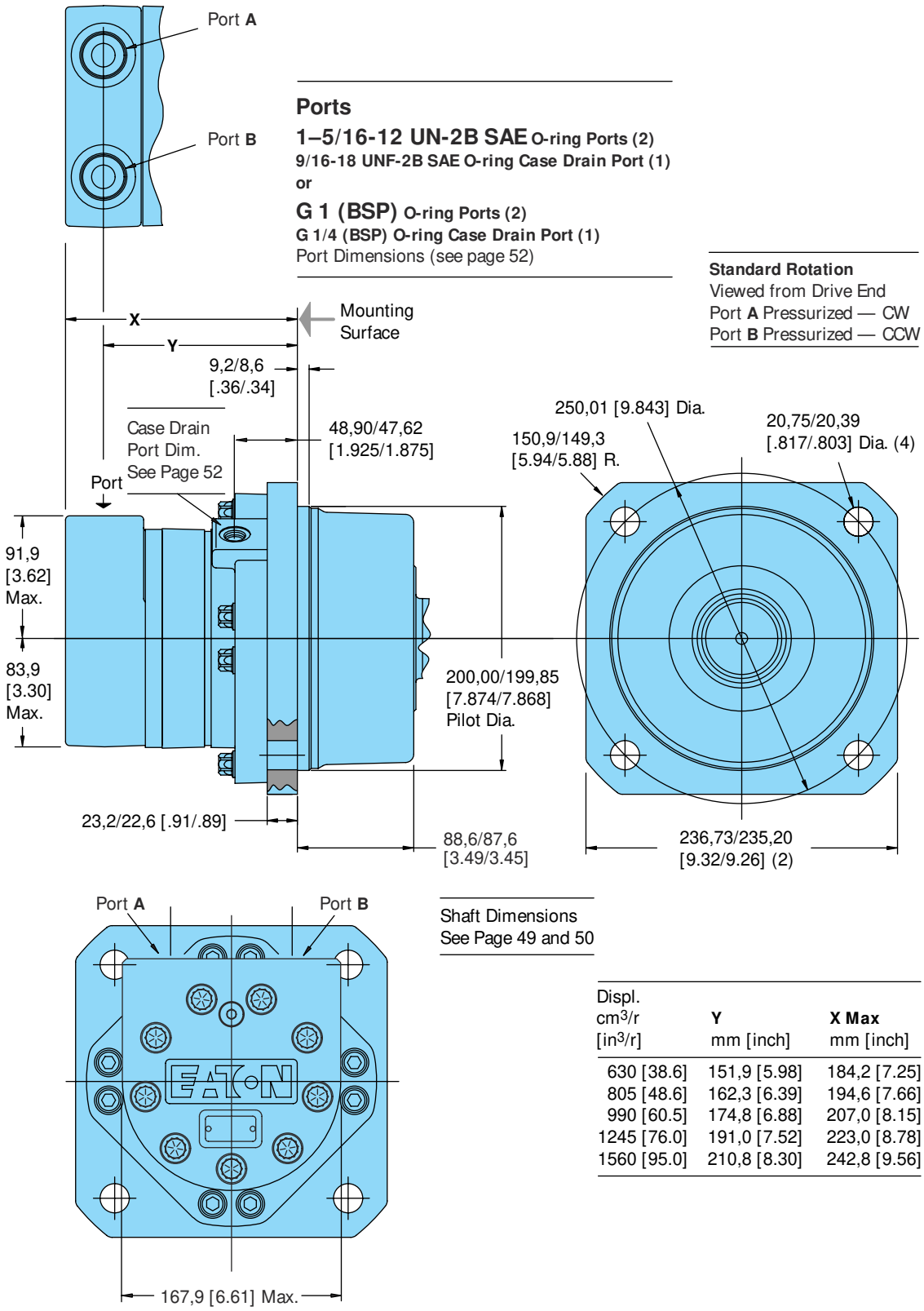

Shaft Dimensions
See Page 49 and 50

Displ. cm^3/r [in^3/r]	Y mm [inch]	X Max mm [inch]
630 [38.6]	151,9 [5.98]	184,2 [7.25]
805 [48.6]	162,3 [6.39]	194,6 [7.66]
990 [60.5]	174,8 [6.88]	207,0 [8.15]
1245 [76.0]	191,0 [7.52]	223,0 [8.78]
1560 [95.0]	210,8 [8.30]	242,8 [9.56]

Dimensions — VIS 45 Series (Bearingless)

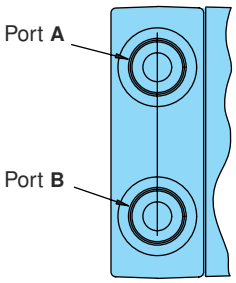

Ports

1–5/16-12 UN-2B SAE O-ring Ports (2)
9/16-18 UNF-2B SAE O-ring Case Drain Port (1)
or
G 1 (BSP) O-ring Ports (2)
G 1/4 (BSP) O-ring Case Drain Port (1)
Port Dimensions (see page 52)

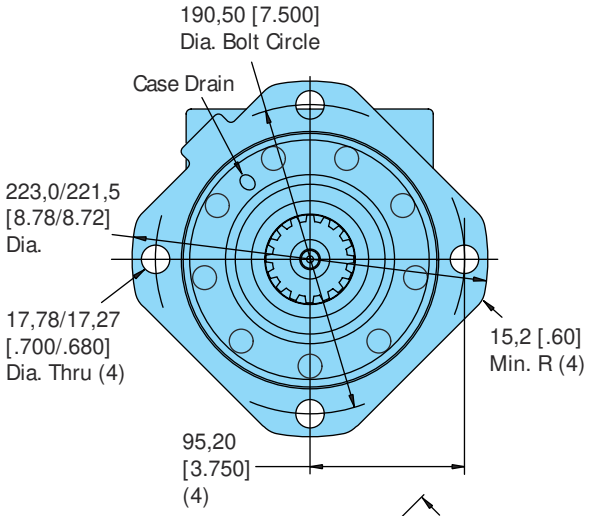

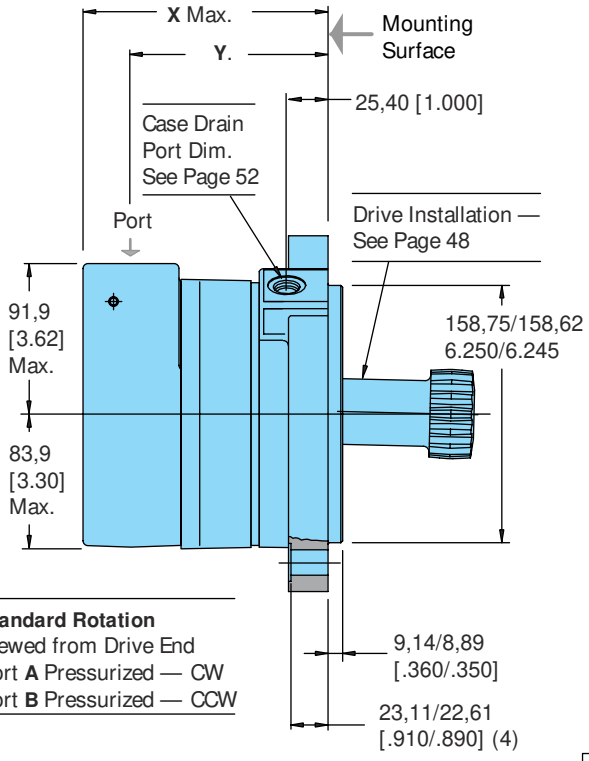

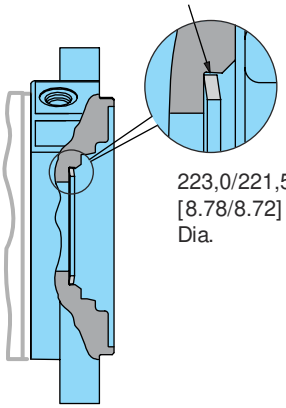

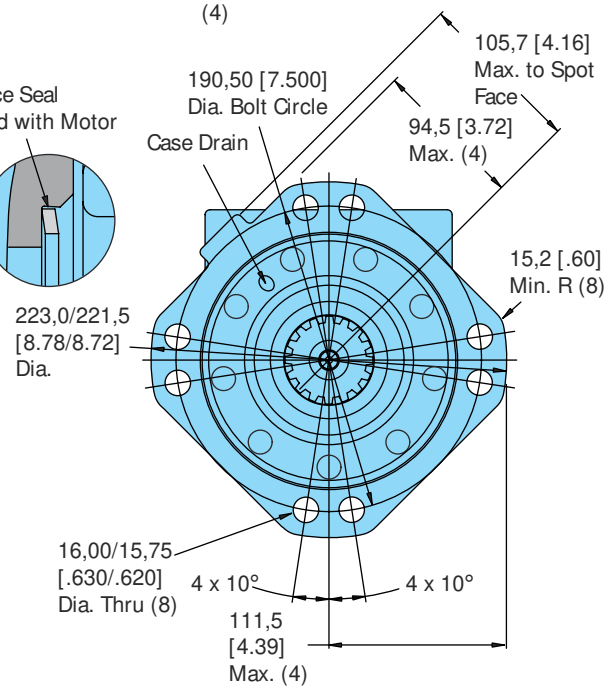

Standard Rotation
Viewed from Drive End
Port **A** Pressurized — CW
Port **B** Pressurized — CCW

Displ. cm³/r [in³/r]	Y mm [inch]	X Max. mm [inch]
630 [38.6]	130,3 [5.13]	161,5 [6.36]
805 [48.6]	141,2 [5.56]	172,5 [6.79]
990 [60.5]	153,4 [6.04]	184,4 [7.26]
1245 [76.0]	169,7 [6.68]	200,7 [7.90]
1560 [95.0]	189,5 [7.46]	220,5 [8.68]

For VIS 45 bearingless motor application information contact your Eaton representative (mating coupling blanks available from Eaton Hydraulics).
Note: After machining blank, part must be hardened per Eaton specification.

Mating Coupling Blank
Eaton Part No. 13521-003

C	116,3	[4.58]	Dia. Max.
D	111,8	[4.40]	Dia. Min.
E	37,64	[1.482]	Dia.
F	136,7	[5.38]	Max.
G	131,6	[5.18]	Min. Full Form Dia.
H	64,8	[2.55]	
J	26,4	[1.04]	
K	109,7	[4.32]	Max.
L	104,6	[4.12]	Min. Full Form Dia.
M	92,58	[3.645]	Dia.
N	73,28	[2.885]	Dia.

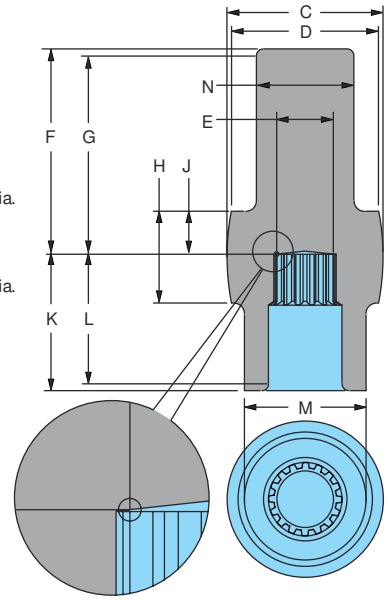

Installation Information for Bearingless Motor — VIS 45 Series

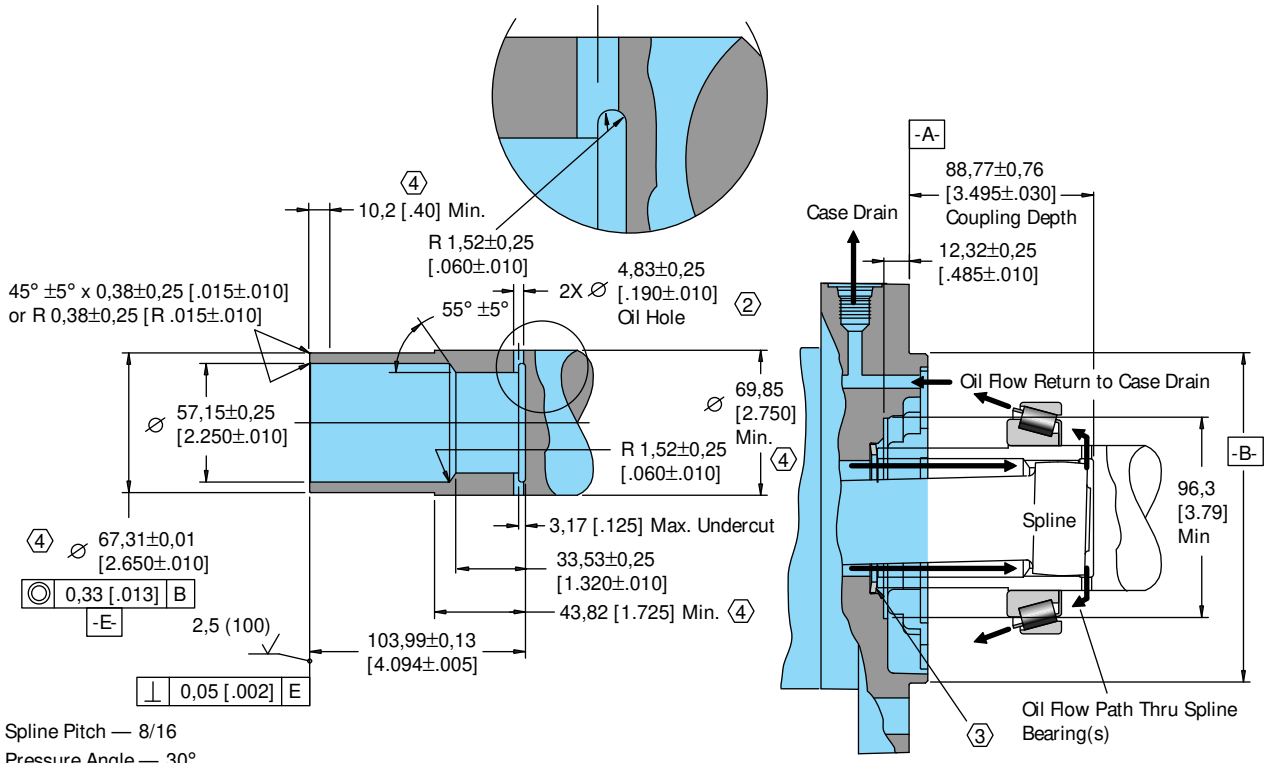

Spline Pitch — 8/16
Pressure Angle — 30°
Number of teeth — 16
Class of Fit — Ref. 5
Type of Fit — Side
Pitch Diameter — Ref. 50,800000 [2.0000000] ◎ 0,33 [.013] B
Base Diameter — Ref. 43,994090032 [1.7320508]
Major Diameter — 56,34±0,15 [2.218±.006]
Minor Diameter — 48.44± 0,08 [1.907±.003]
Form Diameter, Min. — 55,22 [2.174]
Fillet Radius — 1,02±0,25 [.040±.010]
Tip Radius — 0,38±0,13 [.015±.005]
Finish — 1,6 (63)
Involute Profile Variation — +0,000 -0,025 [+.0000 -.0010]
Total Index Variation — 0,041 [.0016]
Lead Variation — 0,015 [.0006]
Circular Space Width:
- Maximum Actual — 6,180 [.2433]
- Minimum Effective — 6,048 [.2381]
- Maximum Effective — Ref. 6,099 [.2401]
- Minimum Actual — Ref. 6,114 [.2407]

Dimension Between Two Pins — Ref. 42,659±0,05 [1.6795±.0020]
Pin Diameter — 6,223 [.2450]

1 Internal spline in mating part to be per spline data. Specification material to be ASTM A304, 8620H carborize to a hardness of 59-62 HRc with case depth (to 50HRc) of 0,76 - 1,27 [.030 - .050]. Dimensions apply after heat treat.

2 Mating part to have critical dimensions as shown. Oil holes must be provided and open for proper oil circulation.

3 Seal to be furnished with motor for proper oil circulation thru splines.

4 Dimension indicated applies within area shown.

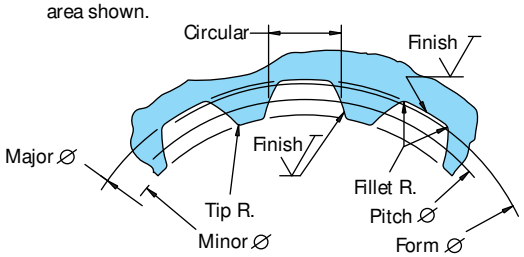

Dimensions — Shafts
VIS 45 Series

70 mm 22 Tooth Splined

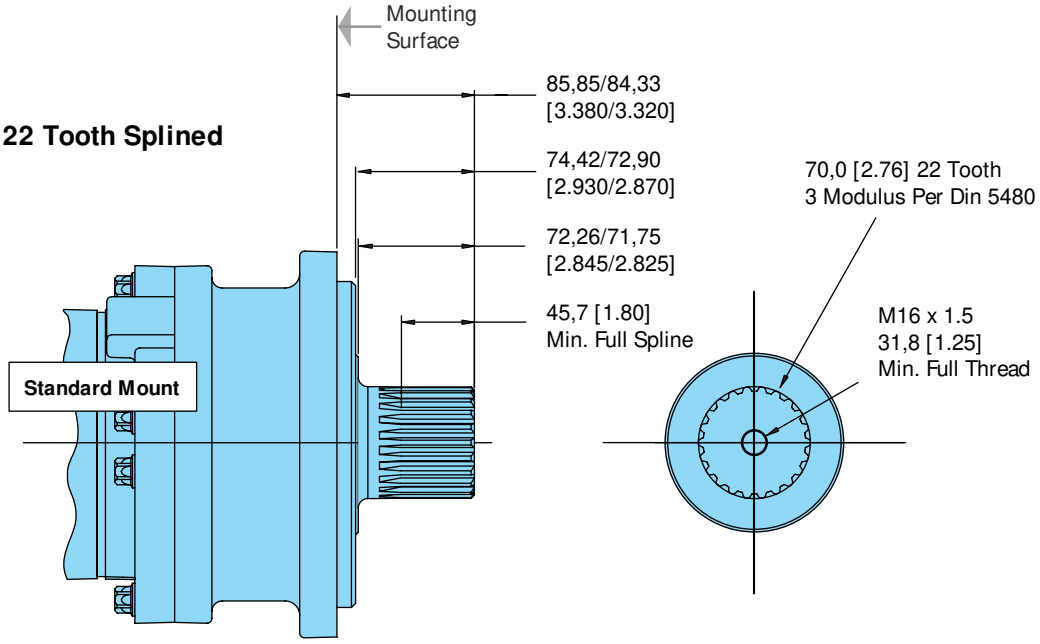

2–3/4 Inch 32 Tooth Splined

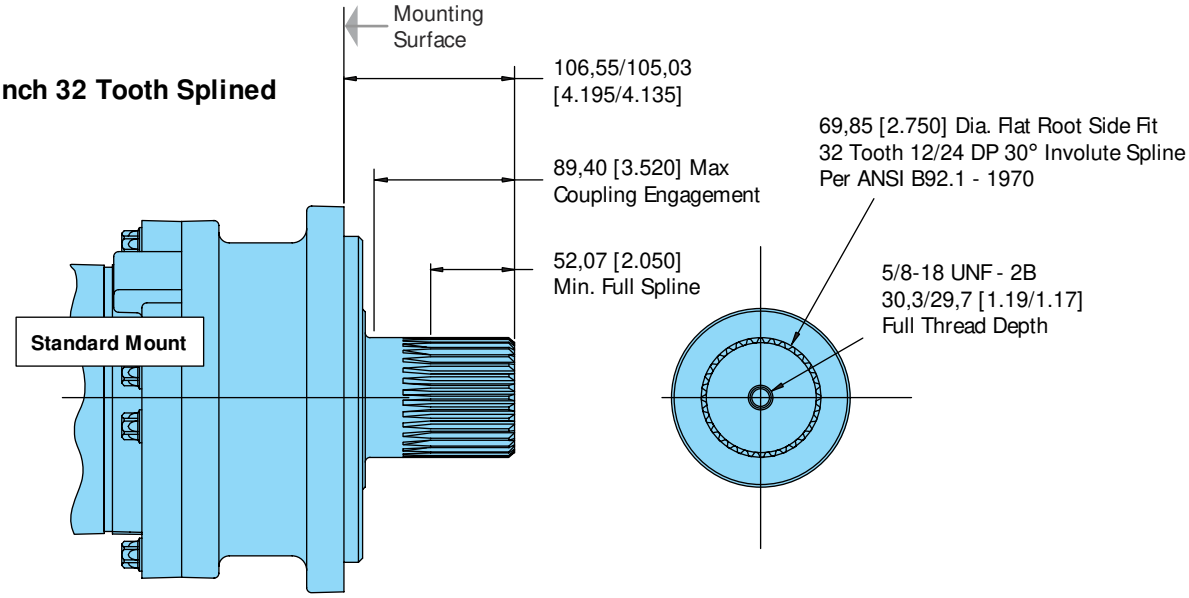

Dimensions — Shafts

VIS 45 Series

2–5/8 Inch Straight

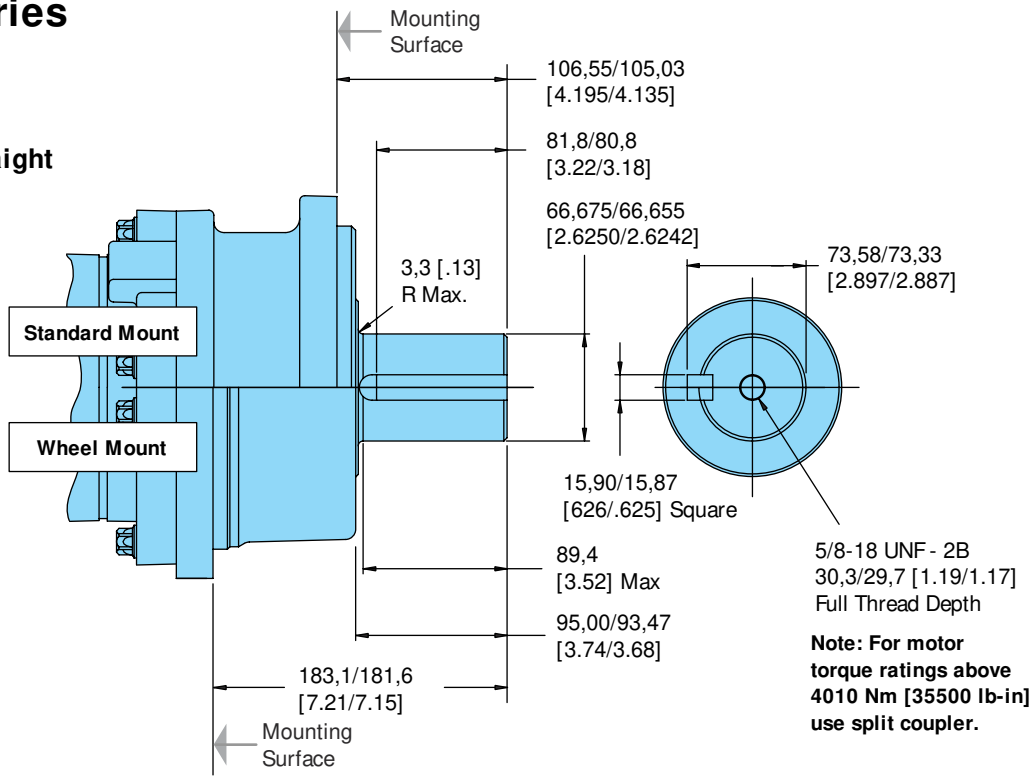

Note: For motor torque ratings above 4010 Nm [35500 lb-in] use split coupler.

60 mm Tapered

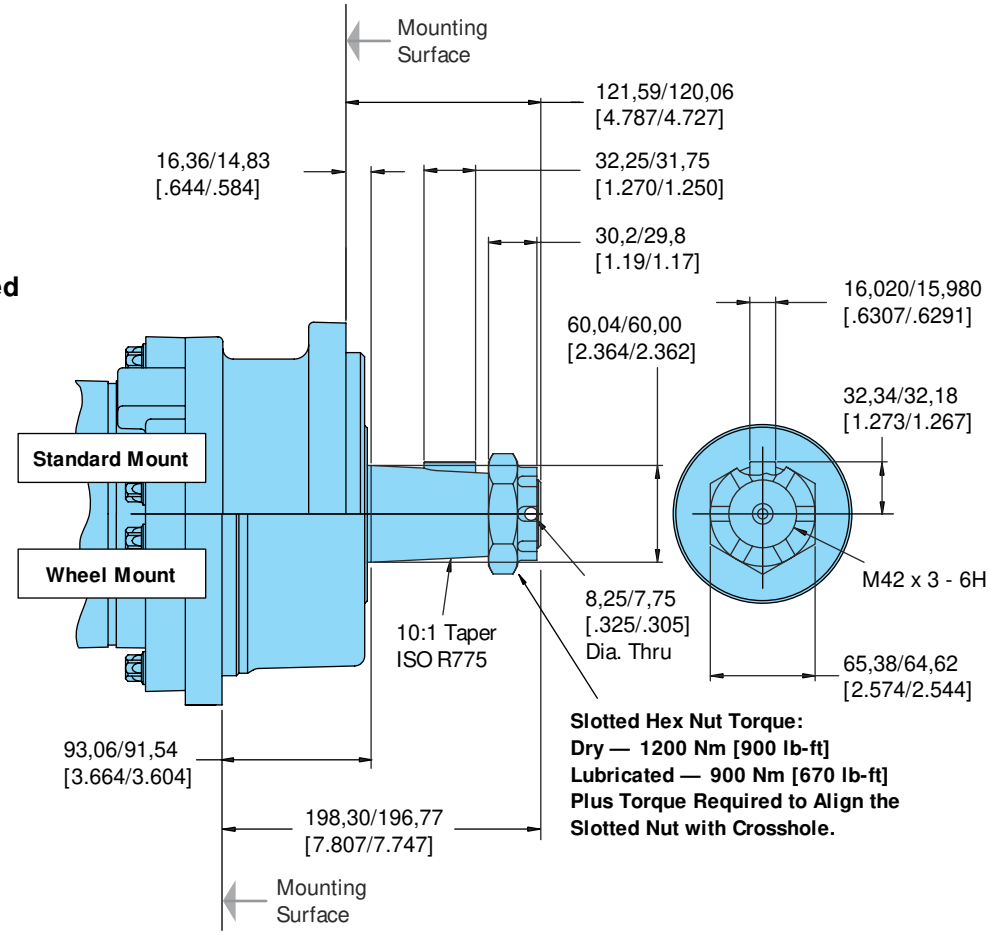

Slotted Hex Nut Torque:
Dry — 1200 Nm [900 lb-ft]
Lubricated — 900 Nm [670 lb-ft]
Plus Torque Required to Align the Slotted Nut with Crosshole.

Shaft Side Load Capacity
VIS 45 Series

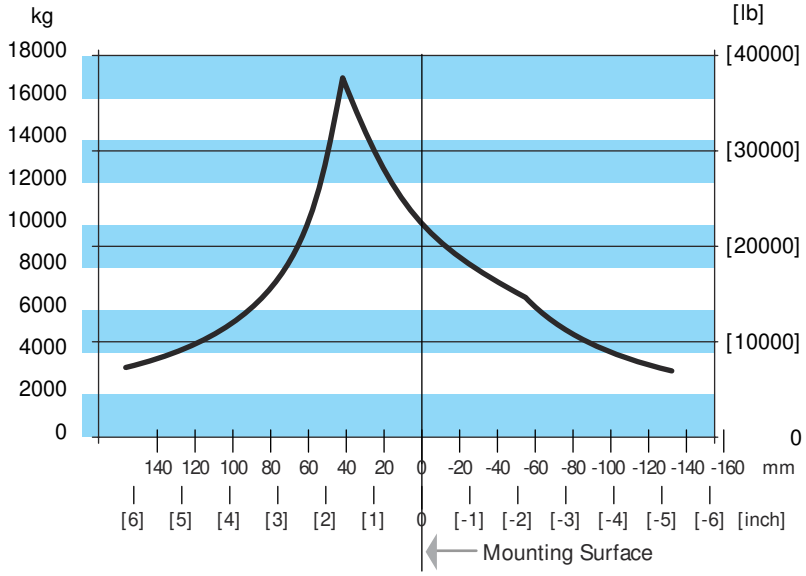

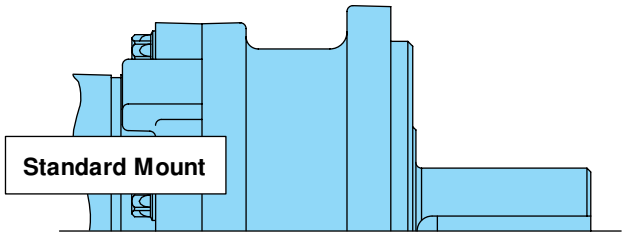

These curves indicate the radial load capacity on the motor shaft(s) at various locations.

The curve is based on B 10 bearing life (2000 hours or 12,000,000 shaft revolutions at 100 RPM) at rated output torque. To determine radial load at speeds other than 100 RPM, multiply the load values given on the bearing curve by the factors in the chart below.

RPM	Multiplication Factor
50	1.23
100	1.00
200	.81
300	.72
400	.66
500	.62
600	.58
700	.56
800	.54

For 3,000,000 shaft revolutions or 500 hours — Increase these shaft loads 52%.

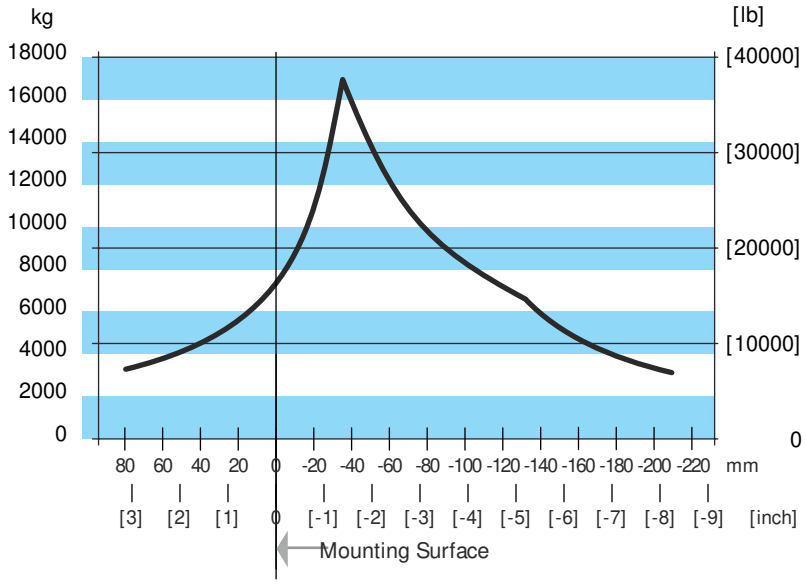

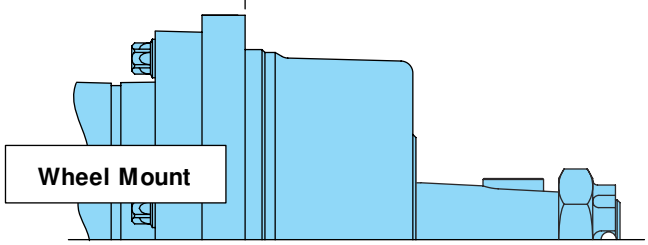

Dimensions — Ports
VIS 45 Series

Ports

1–5/16-12 UN-2B SAE O-ring Ports (2)
9/16-18 UNF-2B SAE O-ring Case Drain Port (1)
or
G 1 (BSP) O-ring Ports (2)
G 1/4 (BSP) O-ring Case Drain Port (1)

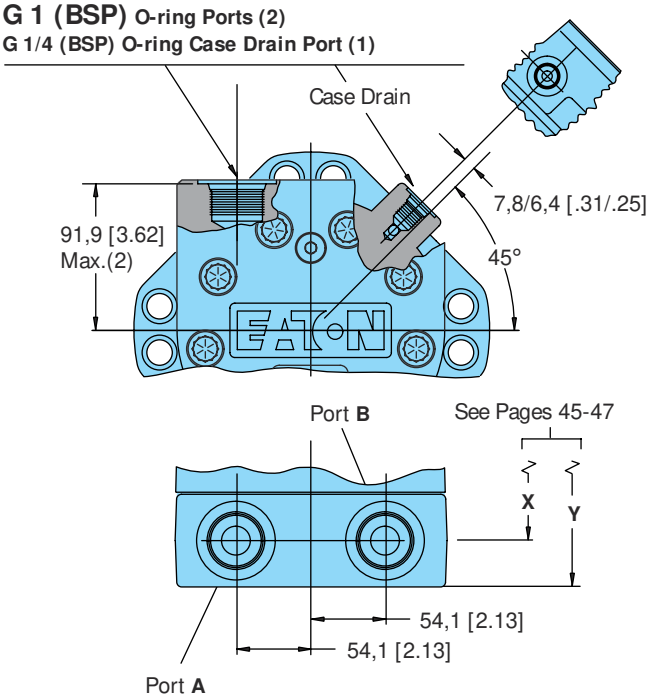

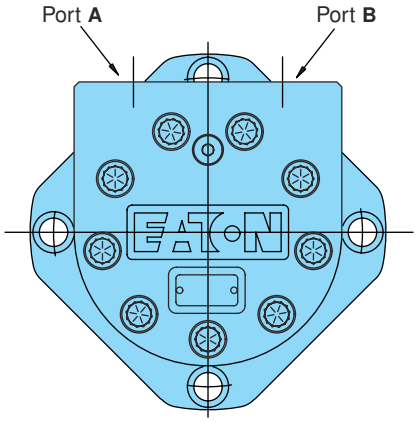

Side Ported Bearingless Motor (4 Bolt)

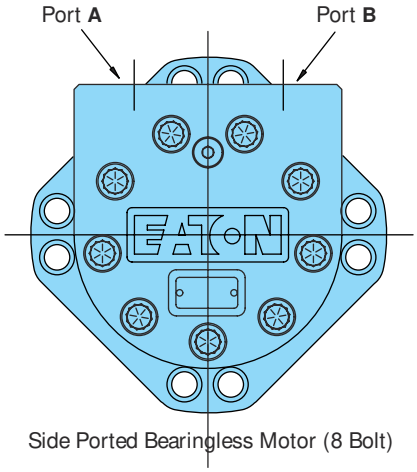

Side Ported Bearingless Motor (8 Bolt)

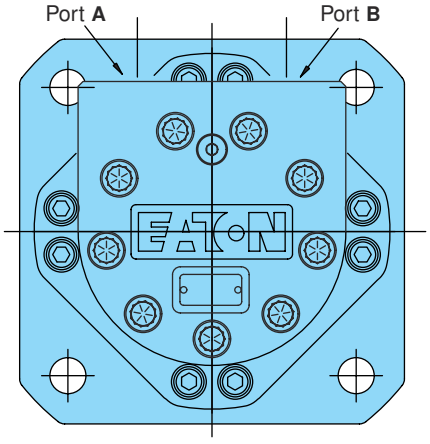

Side Ported Standard and Wheel Motor

Product Numbers
VIS 45 Series (Closed Loop)

Use digit prefix —**155-**, **156-**, or **157-** plus four digit number from charts for complete product number—Example **157-**0004. **Orders will not be accepted without three digit prefix.**

SAE

Mounting	Shaft	Port Size	Displ. cm^3/r [in^3/r] / Product Number				
			630 [38.6]	805 [48.6]	990 [60.5]	1245 [76.0]	1560 [95.0]
Standard	2–5/8 inch Straight	1–5/16-12 UNF O-ring (2) 9/16-18 UNC Drain Port (1)	**155**-0107	-0108	-0109	-0110	-0111
	60 mm Tapered	1–5/16-12 UNF O-ring (2) 9/16-18 UNC Drain Port (1)	**155**-0114	-0115	-0116	-0117	-0118
	70 mm 22 Tooth Splined	1–5/16-12 UNF O-ring (2) 9/16-18 UNC Drain Port (1)	**155**-0121	-0122	-0123	-0124	-0125
	2–3/4 inch 32 Tooth Splined	1–5/16-12 UNF O-ring (2) 9/16-18 UNC Drain Port (1)	**155**-0128	-0085	-0129	-0130	-0131
Wheel	2–5/8 inch Straight	1–5/16-12 UNF O-ring (2) 9/16-18 UNC Drain Port (1)	**156**-0039	-0040	-0041	-0042	-0043
	60 mm Tapered	1–5/16-12 UNF O-ring (2) 9/16-18 UNC Drain Port (1)	**156**-0046	-0047	-0048	-0049	-0050
Bearingless (8 Bolt)		1–5/16-12 UNF O-ring (2) 9/16-18 UNC Drain Port (1)	**157**-0066	-0067	-0068	-0069	-0070
Bearingless (4 Bolt)		1–5/16-12 UNF O-ring (2) 9/16-18 UNC Drain Port (1)	**157**-0004	—	—	—	—

157-0004

ISO

Mounting	Shaft	Port Size	Displ. cm^3/r [in^3/r] / Product Number				
			630 [38.6]	805 [48.6]	990 [60.5]	1245 [76.0]	1560 [95.0]
Standard	2–5/8 inch Straight	G 1 (BSP) (2) G 1/4 (BSP) Drain Port (1)	**155**-0134	-0135	-0136	-0137	-0138
	60 mm Tapered	G 1 (BSP) (2) G 1/4 (BSP) Drain Port (1)	**155**-0141	-0142	-0143	-0144	-0145
	70 mm 22 Tooth Splined	G 1 (BSP) (2) G 1/4 (BSP) Drain Port (1)	**155**-0148	-0149	-0150	-0151	-0152
	2–3/4 inch 32 Tooth Splined	G 1 (BSP) (2) G 1/4 (BSP) Drain Port (1)	**155**-0155	-0156	-0157	-0158	-0159
Wheel	2–5/8 inch Straight	G 1 (BSP) (2) G 1/4 (BSP) Drain Port (1)	**156**-0053	-0054	-0055	-0056	-0057
	60 mm Tapered	G 1 (BSP) (2) G 1/4 (BSP) Drain Port (1)	**156**-0060	-0061	-0062	-0063	-0064
Bearingless (8 Bolt)		G 1 (BSP) (2) G 1/4 (BSP) Drain Port (1)	**157**-0074	-0075	-0076	-0077	-0078
Bearingless (4 Bolt)		G 1 (BSP) (2) G 1/4 (BSP) Drain Port (1)	**157**-0081	—	—	—	—

157-0081

Note: All product numbers in the charts (above) are motors **with** back-pressure relief. These motors with relief valve would be used in Closed loop cuircuits. The back-pressure relief is set at 15,2 bar [220 PSI].

- **VIS motors must have a case drain to tank.**
- **The maximum case pressure for the VIS motor is 3,5 bar [50 PSI].**

Product Numbers
VIS 45 Series (Open Loop)

Use digit prefix —**155-**, **156-**, or **157-** plus four digit number from charts for complete product number—Example **157-**0038. **Orders will not be accepted without three digit prefix.**

SAE

Mounting	Shaft	Port Size	Displ. cm³/r [in³/r] / Product Number				
			630 [38.6]	805 [48.6]	990 [60.5]	1245 [76.0]	1560 [95.0]
Standard	2–5/8 inch Straight	1–5/16-12 UNF O-ring (2) 9/16-18 UNC Drain Port (1)	**155**-0029	-0030	-0031	-0032	-0033
	60 mm Tapered	1–5/16-12 UNF O-ring (2) 9/16-18 UNC Drain Port (1)	**155**-0043	-0044	-0045	-0046	-0047
	70 mm 22 Tooth Splined	1–5/16-12 UNF O-ring (2) 9/16-18 UNC Drain Port (1)	**155**-0014	-0057	-0058	-0059	-0060
	2–3/4 inch 32 Tooth Splined	1–5/16-12 UNF O-ring (2) 9/16-18 UNC Drain Port (1)	**155**-0070	-0071	-0072	-0073	-0074
Wheel	2–5/8 inch Straight	1–5/16-12 UNF O-ring (2) 9/16-18 UNC Drain Port (1)	**156**-0011	-0012	-0013	-0014	-0015
	60 mm Tapered	1–5/16-12 UNF O-ring (2) 9/16-18 UNC Drain Port (1)	**156**-0025	-0026	-0027	-0028	-0029
Bearingless (8 Bolt)		1–5/16-12 UNF O-ring (2) 9/16-18 UNC Drain Port (1)	**157**-0050	-0040	-0042	-0044	-0046
Bearingless (4 Bolt)		1–5/16-12 UNF O-ring (2) 9/16-18 UNC Drain Port (1)	**157**-0038	—	—	—	—

157-0038

ISO

Mounting	Shaft	Port Size	Displ. cm³/r [in³/r] / Product Number				
			630 [38.6]	805 [48.6]	990 [60.5]	1245 [76.0]	1560 [95.0]
Standard	2–5/8 inch Straight	G 1 (BSP) (2) G 1/4 (BSP) Drain Port (1)	**155**-0036	-0037	-0038	-0039	-0040
	60 mm Tapered	G 1 (BSP) (2) G 1/4 (BSP) Drain Port (1)	**155**-0050	-0051	-0052	-0053	-0054
	70 mm 22 Tooth Splined	G 1 (BSP) (2) G 1/4 (BSP) Drain Port (1)	**155**-0063	-0064	-0065	-0066	-0067
	2–3/4 inch 32 Tooth Splined	G 1 (BSP) (2) G 1/4 (BSP) Drain Port (1)	**155**-0077	-0078	-0079	-0080	-0081
Wheel	2–5/8 inch Straight	G 1 (BSP) (2) G 1/4 (BSP) Drain Port (1)	**156**-0018	-0019	-0020	-0021	-0022
	60 mm Tapered	G 1 (BSP) (2) G 1/4 (BSP) Drain Port (1)	**156**-0032	-0033	-0034	-0035	-0036
Bearingless (8 Bolt)		G 1 (BSP) (2) G 1/4 (BSP) Drain Port (1)	**155**-0053	-0041	-0043	-0045	-0047
Bearingless (4 Bolt)		G 1 (BSP) (2) G 1/4 (BSP) Drain Port (1)	**157**-0039	—	—	—	—

157-0039

Note: All product numbers in the charts (above) are motors **without** back-pressue relief. These motors without relief valve would generally be used in open loop cuircuits.

For closed loop circuit as shown on page 6, a motor with a back-pressure relief valve **is required** (see product no.'s for these motors on page 53).

- **VIS motors must have a case drain to tank.**
- **The maximum case pressure for the VIS motor is 3,5 bar [50 PSI].**
- **VIS motors in an open loop circuit must have 3,5 bar [50 PSI] greater return pressure than the pressure in the case to properly lubricate the internal drive (see page 9).**

Model Code
VIS 45 Series

The following 16-digit coding system has been developed to identify all of the configuration options for the VIS 45 motor. Use this model code to specify a motor with the desired features. All 16-digits of the code must be present when ordering. You may want to photocopy the matrix below to ensure that each number is entered in the correct box.

Model Code — VIS 45 Motors

1	2	3	4	5	6	7	8	9	10	11	12	13	14	15	16
A	C	B												0	0

Positions 1, 2, 3 **Product Series**

ACB ..... VIS 45 Motor

Positions 4, 5 **Displacement cm³/r [in³/r]**

31 ..... 520 [31,7]*

35 ..... 572 [34.9]*

39 ..... 630 [38.6]

44 ..... 720 [43.9]*

49 ..... 805 [48.6]

60 ..... 990 [60.5]

76 ..... 1245 [76.0]

95 ..... 1560 [95.0]

* For performance and dimension data contact your Eaton Hydraulics representative.

Position 6 **Mounting Type**

A ..... 4 Bolt (Bearingless) 158,70 [6.250] Pilot Dia. with 9,07 [.355] Pilot Length and 17,53 [.690] Dia. Holes on 190,50 [7.500] Dia.B.C. - Max. Torque Allowed 3615 Nm [32000 lb-in](Displ. Code 32, 35, 39 Only)

C ..... 8 Bolt (Bearingless) 158,70 [6.250] Pilot Dia. with 9,07 [.355] Pilot Length and 15,88 [.625] Dia. Holes on 190,50 [7.500] Dia.B.C.

D ..... 4 Bolt (Wheel) 200,0 [7.87] Pilot Dia. with 9,0 [.35] Pilot Length and 20,57 [.810] Dia. Holes on 250,0 [9.84] Dia. B.C.

H ..... 4 Bolt (Standard) 200,0 [7.87] Pilot Dia. with 9,0 [.35] Pilot Length and 20,57 [.810] Dia. Holes on 250,0 [9.84] Dia. B.C.

Position 7, 8 **Output Shaft**

00 ..... None (Bearingless)

05 ..... 2–5/8 inch Dia. Straight Shaft with 5/8-18 UNF-2B Thread in End and 15,88 [.625] Sq. x 81,3 [3.20] Straight Key

06 ..... 70 mm Dia. 22 Tooth 3 Modulus Splined Shaft Per DIN 5480 with M16 X 1,5 Thread in End

08 ..... 2–3/4 inch Dia. Flat Root Side Fit 32 Tooth 12/24 DP 30 Deg. Involute Spline with 5/8-18 UNF-2B Thread in End

09 ..... 60 mm Dia. 10:1 Tapered Shaft Per ISO R775 with M42 x 3-6H Threaded Shaft End, 16W x 10H x 32L [.630W x .394H x 1. 260L]

Position 9 **Port Type**

A ..... 1–5/16-12 UN-2B O-ring Ports, Accepts Fittings for SAE J1926/1

B ..... G 1 (BSP) Ports, Accepts Fittings with Elastomeric or Deformable Metallic Sealing Member Per DIN 3852

Position 10 **Case Flow Options**

D ..... Shuttle Valve with Side Facing 9/16-18 UNF-2B O-ring Case Drain Port, Accepts Fittings for SAE J1926/1 Case Drain Required

H ..... Shuttle Valve with Side Facing G 1/4 (BSP) Port Case Drain, Case Drain Required

Position 11 **Back-Pressure Relief**

0 ..... None (for Open Loop Only)* *

1 ..... Set at 15,2 bar [220 PSI] (for Servo Pumps)

3 ..... Set at 4,5 bar [65 PSI] (for Manual Pumps)

Positions 12,13 **Special Features**

00 ..... None

Position 14 **Paint/Special Packaging**

0 ..... No Paint, Individual Box

A ..... Painted Low Gloss Black, Individual Box

B ..... No Paint, Bulk Box Option

C ..... Painted Low Gloss Black, Bulk Box Option

Position 15 **Eaton Assigned Code when Applicable**

0 ..... Assigned Code

Position 16 **Eaton Assigned Design Code**

D ..... Assigned Design Code

*** * For Open Loop**

- **VIS motors must have a case drain to tank.**
- **The maximum case pressure for the VIS motor is 3,5 bar [50 PSI].**
- **VIS motors in an open loop circuit must have 3,5 bar [50 PSI] greater return pressure than the pressure in the case to properly lubricate the internal drive (see page 9).**



Eaton Corporation is a global manufacturer of highly engineered products that serve industrial, vehicle, construction, commercial, aerospace and semiconductor markets. Principal products include hydraulic products and fluid connectors, electrical power distribution and control equipment, truck drivetrain systems, engine components, ion implanters and a wide variety of controls. Headquartered in Cleveland, Ohio, the company has 63,000 employees and 195 manufacturing sites in 23 countries around the world. Eaton's sales for 1999 were $8.4 billion.

Information contained in this catalog is accurate as of the publication date and is subject to change without notice. Performance values are typical values. Customers are responsible for selecting products for their applications using normal engineering methods.

Eaton Hydraulics
14615 Lone Oak Road
Eden Prairie, MN 55344
Telephone: 952 937-7254
Fax: 952 937-7130
www.eatonhydraulics.com

46 New Lane, Havant
Hampshire PO9 2NB
England
Telephone: (44) 23 92 486 451
Fax: (44) 23 92 487 110

DNV
ACCREDITED BY THE DUTCH COUNCIL FOR CERTIFICATION Reg. No. 24
ISO-9001 CERTIFICATED FIRM
DET NORSKE VERITAS INDUSTRY BV, THE NETHERLANDS

Quality System Certified
Products in this catalog are manufactured in an ISO-9001-certified site.

11-01-112
EN-0101

Copyright Eaton Corporation, 1998, and 2001
All rights reserved.
Printed in U.S.A