SETTIMA®
research & innovation, always

MORE EFFICIENCY IN A COMPACT DESIGN





INDUSTRIAL



MOBILE



WIND ENERGY

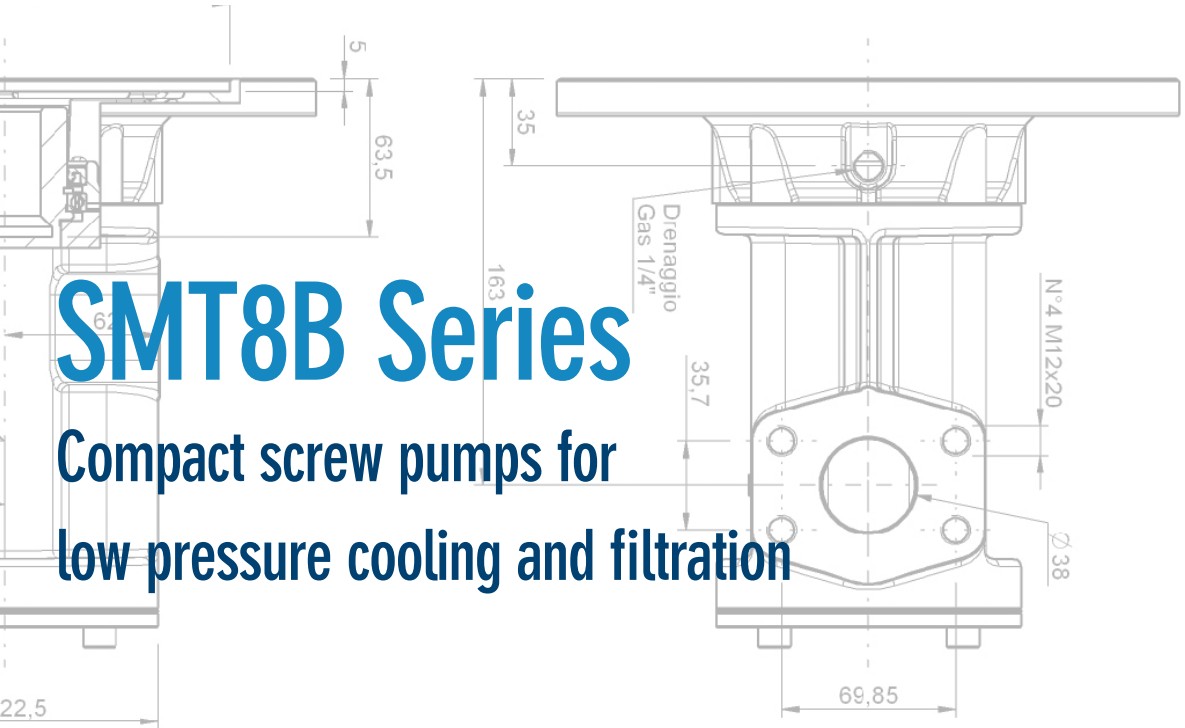

SMT8B Series

Compact screw pumps for low pressure cooling and filtration



QUALITY SYSTEM CERTIFICATION
DNV·GL
ISO 9001

Grampelhuber GmbH | www.grampelhuber.at
A-4810 Gmunden/Österreich
T: +43 (0)7612-64902-0 office@grampelhuber.at

www.settima.it

SMT8B Series / Serie SMT8B

Settima designs and manufactures hydraulic three screw pumps and helical rotors pumps. **Settima** screw pumps, coupled together with external or immersed motors, run quietly and with no pulsations, they are used in hydraulic applications and many types of systems. **Settima** screw pumps are positive displacement rotary pump with axial flow design. There are only three moving parts. The power rotor is the only driven part that extends outside the case. The idler screws act as sealing parts and are turned hydraulically by the fluid being pumped. There is only a rolling action between the drive screw and the idler ones. The rolling action eliminates noise and vibration.

Settima *progetta e produce pompe idrauliche a tre viti e a rotori elicoidali. Le pompe* ***Settima****, accoppiate a motori esterni o sommersi, funzionano silenziosamente e senza pulsazioni e sono utilizzatie in svariate applicazioni idrauliche. Le pompe a viti* ***Settima*** *sono pompe volumetriche progettate con trasferimento assiale della pressione. All'interno della pompa ci sono solo tre parti in movimento. La vite principale è l'unica parte guidata e trasmette il moto alle viti satelliti. Le viti satelliti svolgono anche la funzione di creazione di zone di pressione a tenuta.*

Applications / Applicazioni

WIND ENERGY
ENERGIA EOLICA

Low pressure cooling and recirculation (pitch controls of windmill blades)
Raffreddamento a basse pressioni e ricircolo (controllo inclinazione pale mulini a vento)

Lube services (gear and gear boxes)
Lubrificazione (ingranaggi)

INDUSTRIAL
INDUSTRIALE

Low pressure cooling
Raffreddamento a basse pressioni

Off-line compact cooling systems
Sistemi compatti di raffreddamento off-line

Powerpacks cooling
Raffreddamento centraline

Chillers
Raffreddamento in genere

Oil seal services (compressors, generators)
Paraolio (compressori, generatori).

Lube services (diesel engines, turbines, compressors)
Lubrificazione (motori diesel, turbine, compressori)

MOBILE
MOVIMENTAZIONE

Mobile machines cooling
Raffreddamento per macchinari movimentazione terra

Filtration, low pressure recirculation
Filtrazione, ricircolo a bassa pressione







Flow media / Fluidi

Mineral oil *Oli minerali*
Synthetic oil *Oli sintetici*

Grampelhuber GmbH | www.grampelhuber.at
A-4810 Gmunden/Österreich
T: +43 (0)7612-64902-0 office@grampelhuber.at

Motor pump SMT8B / Motopompa SMT8B

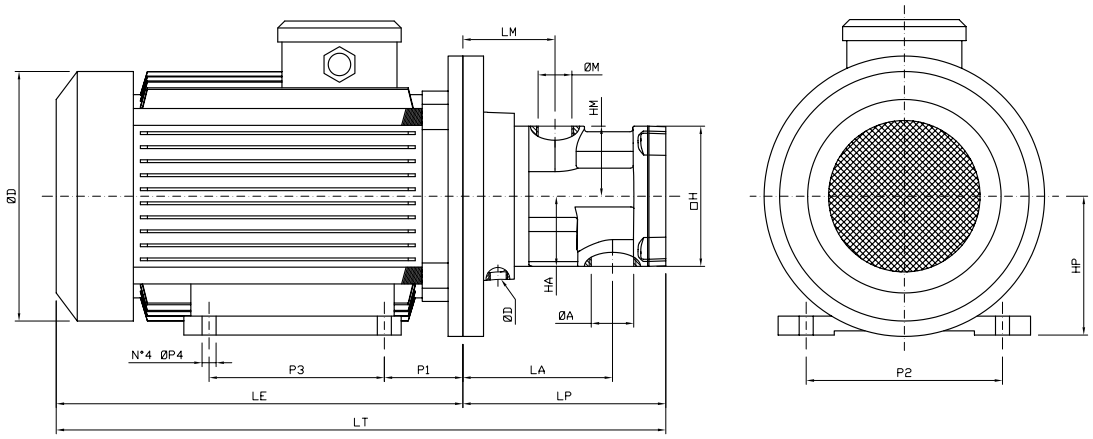

SMT8B																			
PUMP SIZE		GR 32				GR 40					GR 45						GR 60	
L / min		26-30-35-45				60-80					80-120-155						210-300-380	
MOTOR SIZE		71	80	90 S	90 L	80	90 S	90 L	100	112	90 S	90 L	100	112	132 S	132 M	100	112
HOLLOW SHAFT		14	19	24		19	24		28		24		28		38		28	38
MOTOR	ØD	160,0	200,0			200,0			250,0		200,0		250,0		300,0		250,0	
	LE	225,0	256,0	255,0	280,0	256,0	255,0	280,0	307,0	328,0	255,0	280,0	307,0	328,0	365,0	403,0	307,0	328,0
	HP	71,0	80,0	90,0		80,0	90,0		100,0	112,0	90,0		100,0	112,0	132,0		100,0	112,0
	P1	45,0	50,0	56,0		50,0	56,0		63,0	70,0	56,0		63,0	70,0	89,0		63,0	70,0
	P2	112,0	125,0	140,0		125,0	140,0		160,0	190,0	140,0		160,0	190,0	216,0		160,0	190,0
	P3	90,0	100,0		125,0	100,0		125,0	140,0		100,0	125,0	140,0			178,0	140,0	
	ØP4	7,0	10,0			10,0			12,0		10,0		12,0				12,0	
PUMP	LA	93,3	106,7	114,7		108,0	116,0		124,3		136,5		149,5		163,0		161,5	
	LM	52,3	65,7	73,7		67,0	75,0		83,3		81,0		94,0		107,5		88,5	
	LP	131,3	144,7	152,7		146,0	154,0		162,3		188,0		201,0		214,5		233,0	
	H	100,0				100,0					100,0						130,0	
	HA	50,0				50,0					70,0						80,0	
	ØA	1" Gas				1" Gas					1" 1/2 Gas						2" SAE-3000	
	HM	50,0				50,0					65,0						80,0	
	ØM	3/4" Gas				3/4" Gas					1" 1/4 Gas						1" 1/4 SAE-3000	
	ØD	1/4" Gas				1/4" Gas					1/4" Gas						1/4" Gas	
LT		356,3	400,7	407,7	432,7	402,0	409,0	434,0	469,3	490,3	443,0	468,0	508,0	529,0	579,5	617,5	540,0	561,0

SMAT8B (For US market)													
PUMP SIZE		GR 32				GR 40					GR 45		
L / min		26-30-35-45				60-80					80-120-155		
MOTOR SIZE		71	80	90 S	90 L	80	90 S	90 L	100	112	90 S	90 L	100
HOLLOW SHAFT		14	19	24		19	24		28		24		28
MOTOR	ØD	160,0	200,0			200,0			250,0		200,0		250,0
	LE	225,0	256,0	255,0	280,0	256,0	255,0	280,0	307,0	328,0	255,0	280,0	307,0
	HP	71,0	80,0	90,0		80,0	90,0		100,0	112,0	90,0		100,0
	P1	45,0	50,0	56,0		50,0	56,0		63,0	70,0	56,0		63,0
	P2	112,0	125,0	140,0		125,0	140,0		160,0	190,0	140,0		160,0
	P3	90,0	100,0		125,0	100,0		125,0	140,0		100,0	125,0	140,0
	ØP4	7,0	10,0			10,0			12,0		10,0		12,0
PUMP	LA	93,3	106,7	114,7		108,0	116,0		124,3		136,5		149,5
	LM	52,3	65,7	73,7		67,0	75,0		83,3		81,0		94,0
	LP	131,3	144,7	152,7		146,0	154,0		162,3		188,0		201,0
	H	100,0				100,0					100,0		
	HA	50,0				50,0					70,0		
	ØA	1" Gas				1" Gas					1" 1/2 Gas		

Motor dimensions data might change according to motor manufacturer so, please, contact Settima.
Le dimensioni del motore possono cambiare in base al costruttore, quindi, si prega di conttatare Settima.

Technical characteristics / Caratteristiche tecniche

Available models ***Modelli disponibili***	GR32 - GR40 - GR45 - GR60	
Flanges ***Flange***	IEC standard (for direct coupling with motor) Aluminium made *IEC standard (per accoppiamento diretto) Alluminio*	
Connections ***Connessioni***	BSPP(GAS) – SAE 3000	
Drive loading ***Carichi***	No axial or radial loads *Nessun carico assiale o trasversale*	
Shaft rotation ***Rotazione albero***	Clockwise (from shaft end) for counter clockwise please contact Settima *Destra, per rotazione sinistra si prega di contattare Settima*	
Shaft speed ***Velocità di rotazione***	From 500 to 1.750 rpm *Da 500 a 1.750 rpm*	
Flows ***Portate***	From 15 up to 380 L/min (at 1.450 rpm) *Da 15 a 380 L/min (a 1.450 rpm)*	
Outlet pressure ***Pressione di mandata***	From 0 up to 15 bar *Da 0 a 15 bar*	
Inlet pressure ***Pressione di aspirazione***	Min. -0,5 bar max. 1,5 bar *Min. -0,5 bar max. 1,5 bar*	
Viscosity ***Viscosità***	From 10 up to 15.000 cSt* *Da 10 a 15.000 cSt**	
Seals ***Guarnizioni***	NBR, FKM, EPDM	
Acoustic emissions ***Emissioni acustiche***	From 55 up to 63 db(A) at 1.750 rpm *Da 55 fino a 63 db(A) at 1.750 rpm*	
Pump body (special application) ***Corpo (altri materiali)***	Cast iron *Ghisa*	
Enviroment temperature ***Temperatura ambiente***	From -20° up to +60°C *Da -20°a +60°C*	
Hydraulic temperature ***Temperatura olio***	From -20°C up to +150°C *Da -20°C a +150°C*	
Filtration ***Filtrazione***	Permissible degree of fluid contamination NAS to 1638 class 8 or ISO DIS 4406 17/14. Recommended filtration β 25 ≥ 75	*Contaminazione NAS tipo classe 1638 8 o ISO DIS 4406 17/14. Filtrazione raccomandata β 25 ≥ 75*

Standard performance / *Prestazioni standard*

Characteristics	*Caratteristiche*	Un.	Min.	Max.
Gas content (undissolved)	*Gas contenuto (non disciolto)*	Vol%	-	5
Level of contamination	*Livello di contaminazione*	ISO4406	-	21(19/17)
Kinematic viscosity	*Viscosità Cinematica*	mm2/s	7	15.000*
Temperature (NBR seals)	*Temperatura (guarnizione NBR)*	°C	-25	80
Temperature (FPM seals)	*Temperatura (guarnizione FPM)*	°C	-25	150
Acoustic emissions	*Emissioni acustiche*	dB(A)	55 @ 1.500 rpm	56 @ 3.000 rpm
Pressure	*Pressione*	bar	-	15 (peak 20)

* Please contact Settima for more information about viscosity level.
* *Contattare Settima per maggiori informazioni sul livello di viscosità.*

Grampelhuber GmbH | www.grampelhuber.at
A-4810 Gmunden/Österreich
T: +43 (0)7612-64902-0 office@grampelhuber.at

Product description / Descrizione prodotto

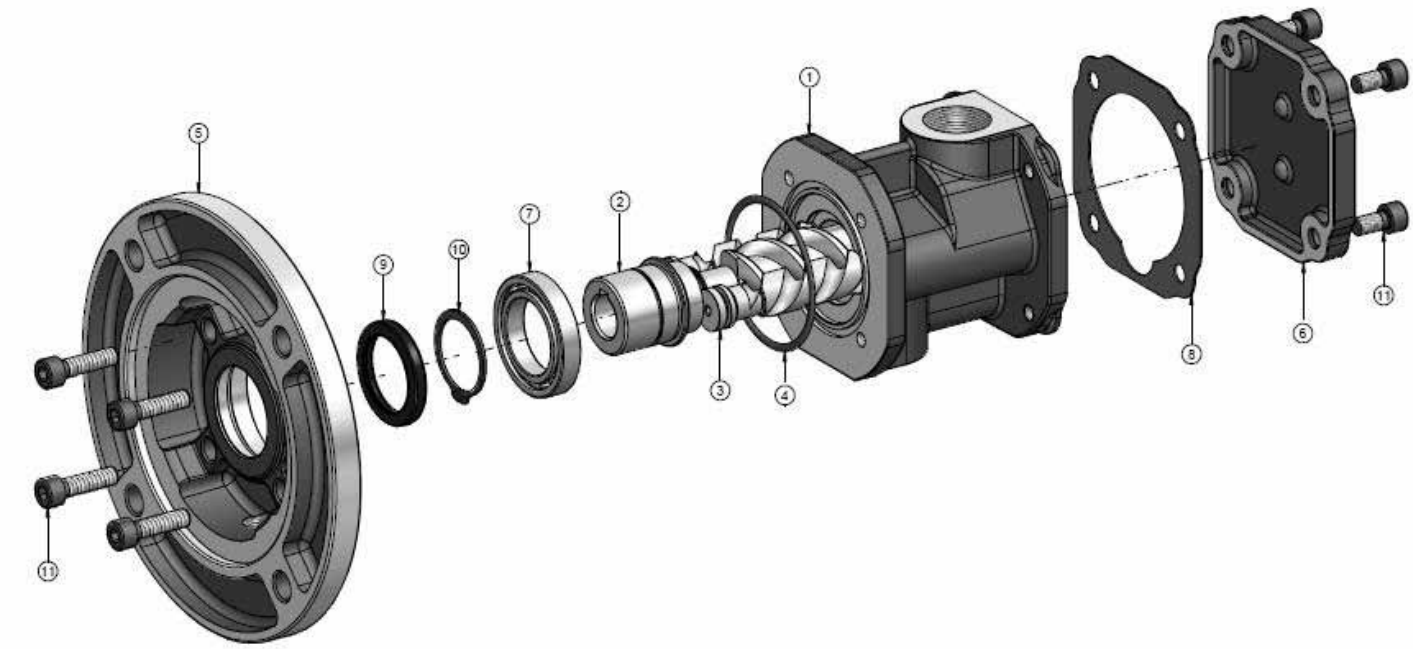

N°	DESCRIPTION	*DESCRIZIONE*	MATERIAL	*MATERIALE*
1	Pump body	*Corpo pompa*	Aluminum / Cast iron*	*Alluminio / Ghisa**
2	Main screw	*Vite centrale*	Steel*	*Acciaio**
3	Idler screw	*Vite laterale*	Cast iron*	*Ghisa**
4	O ring		NBR / FKM*	
5	Front cover	*Flangia motore*	Aluminium*	*Alluminio**
6	End cover	*Tappa posteriore*	Aluminium*	*Alluminio**
7	Ball bearing	*Cuscinetto*	Steel*	*Acciaio**
8	Gasket	*Guarnizione*	NBR*	
9	Lip seal	*Guarnizione a labbro*	NBR / FKM*	
10	Circlip	*Anello elastico*	Steel	*Acciaio*
11	Screws	*Viti*	Steel	*Acciaio*

** Others available upon request.*
** Altri tipi disponibili su richiesta.*

Hollow shaft availability / *Disponibilità albero maschio*

Size / *Taglia*	Type / *Tipo*	AC14	AC19	AC24	AC28	AC38
GR 32	26L	X	X	X		
	30L					
	35L					
	45L					
GR 40	60L		X	X	X	
	80L					
GR 45	80L			X	X	X
	120L					
	155L					
GR 60	210L				X	X
	300L					
	380L					

SMT8B - Standard dimensions / Dimensioni standard

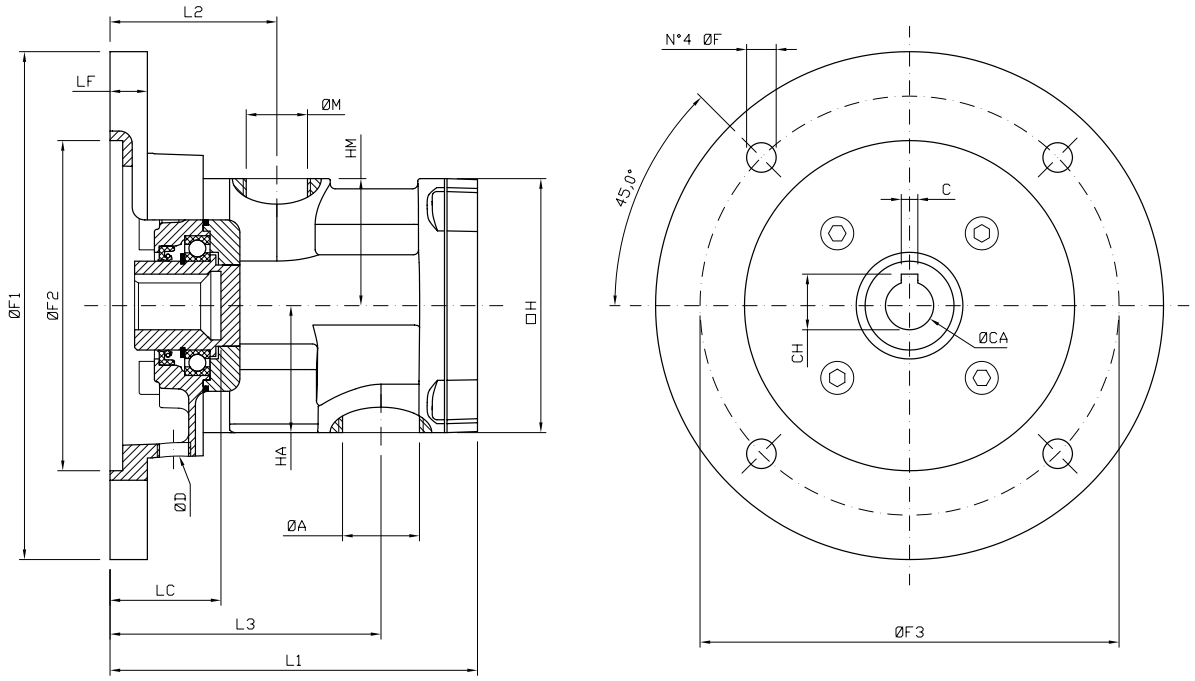

SMT8B												
SIZE / *TAGLIA*		GR 32			GR 40			GR 45			GR 60	
L/min (3000 RPM)		26 - 35 - 45			60 - 80			120 - 155			210 - 300 - 380	
SHAFT - FLANGE *ALBERO - FLANGIA*		Ac14-B5	Ac19-B5	Ac24-B5*	Ac19-B5	Ac24-B5	Ac28-B5	Ac24-B5	Ac28-B5	Ac38-B5*	Ac28-B5	Ac38-B5
FLANGE *FLANGIA*	ØF	9,5	11,6		12,0		14,0	12,0	14,0	15,0	14,0	
	ØF1	160,0	200,0		200,0		250,0	200,0	250,0	300,0	250,0	
	ØF2	110,0	130,0		130,0		180,0	130,0	180,0	230,0	180,0	
	ØF3	130,0	165,0		165,0		215,0	165,0	215,0	265,0	215,0	
	LF	23,3	15,7	23,7	15,0	23,0	15,0	12,0	15,0		11,0	
SHAFT ALBERO	C	5,2	6,5	8,5	6,5	8,5		8,5		10,5	8,5	
	ØCA	14,0	19,0	24,0	19,0	24,0	28	24,0	28,0	38,0	28,0	
	CH	16,2	21,9	27,5	21,8	27,5	31,5	27,5	31,5	42,0	31,5	
	LC	23,8	43,7	52,7	42,6	52,6	62,9	53,0	63,5	81,2	64,8	
PUMP *POMPA*	L1	131,3	144,7	152,7	146,0	154,0	162,3	188,0	201,0	214,5	233,0	
	L2	52,3	65,7	73,7	67,0	75,0	83,3	81,0	94,0	107,5	88,5	
	L3	93,3	106,7	114,7	108,0	116,0	124,3	136,5	149,5	163,0	161,5	
	H	100,0			100,0			100,0			130,0	
	HA	50,0			50,0			70,0			80,0	
	ØA	1" Gas			1" Gas			1" 1/2 Gas			2" SAE-3000	
	HM	50,0			50,0			65,0			80,0	
	ØM	3/4" Gas			3/4" Gas			1" 1/4 Gas			1" 1/4 SAE-3000	
	ØD	1/4" Gas			1/4" Gas			1/4" Gas			1/4" Gas	

* The data might change according to the motor manufacturer, please contact Settima.
** I dati potrebbero cambiare in base al costruttore dei motori, contattare Settima.*

SETTIMA® research & innovation, always
Grampelhuber GmbH | www.grampelhuber.at
A-4810 Gmunden/Österreich
T: +43 (0)7612-64902-0 office@grampelhuber.at

SMAT8B - Standard dimensions / Dimensioni standard

SMAT8B (For US market)							
SIZE / *TAGLIA*		**GR 32**		**GR 40**		**GR 45**	
L/min (3000 RPM)		**26 - 35 - 45**		**60 - 80**		**120 - 155**	
SHAFT - FLANGE *ALBERO - FLANGIA*		**Ac7/8" 143/145TC**	**Ac1" 1/8 182/184TC**	**Ac7/8" 143/145TC**	**Ac1" 1/8 182/184TC**	**Ac1" 1/8" 182/184TC**	**Ac1" 3/8 213/1215TC**
FLANGE *FLANGIA*	**ØF**	0,413	0,554	0,413	0,554	0,554	0,554
	ØF1	6,500	9,000	6,500	9,000	9,000	9,000
	ØF2	4,500	8,500	4,500	8,500	8,500	8,500
	ØF3	5,878	7,250	5,878	7,250	7,250	7,250
	FL	0,630	0,630	0,630	0,630	0,630	0,630
SHAFT *ALBERO*	**C**	0,209	0,256	0,209	0,256	0,256	0,335
	ØCA	0,875	1,125	0,875	1,125	1,125	1,375
	CH	0,984	1,260	0,984	1,260	1,271	1,535
	LC	2,217	2,965	2,209	2,866	2,866	3,327
PUMP *POMPA*	**L1**	6,035	7,551	6,075	6,705	8,200	9,205
	L2	2,925	4,441	2,965	3,594	3,988	4,992
	L3	4,539	6,055	4,579	5,209	6,173	7,177
	H	3,937		3,937		3,937	
	HA	1,969		1,969		2,756	
	ØA	1" Npt		1" Npt		1" 1/2 Npt	
	HM	1,969		1,969		2,559	
	ØM	3/4" Npt		3/4" Npt		1" 1/4 Npt	
	ØD	1/4" Npt		1/4" Npt		1/4" npt	

* The data might change according to the motor manufacturer, please contact Settima.
** I dati potrebbero cambiare in base al costruttore dei motori, contattare Settima.*

GR32 performances

FLOW

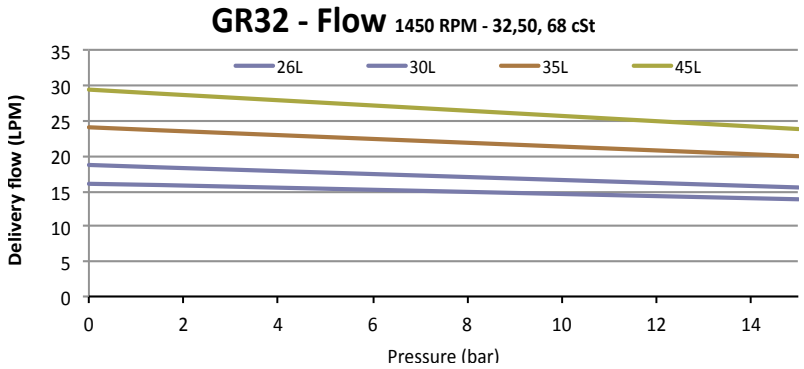

POWER

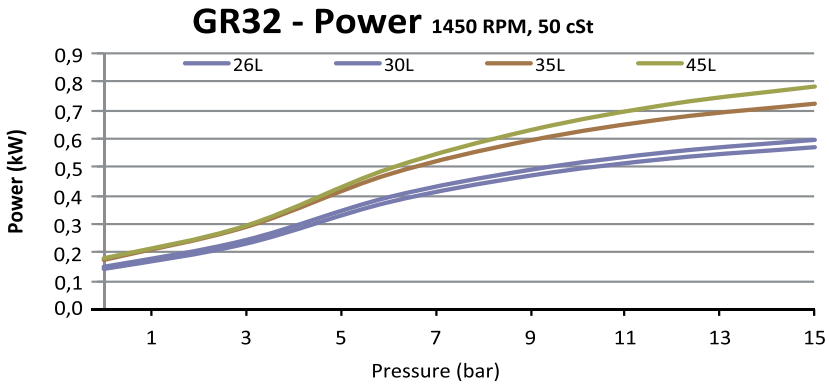

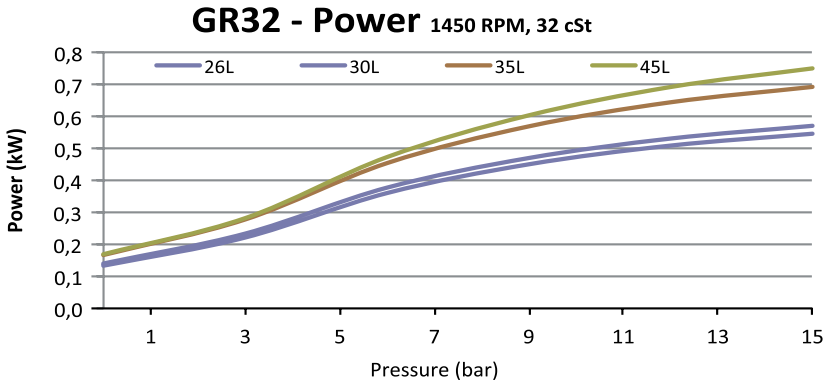

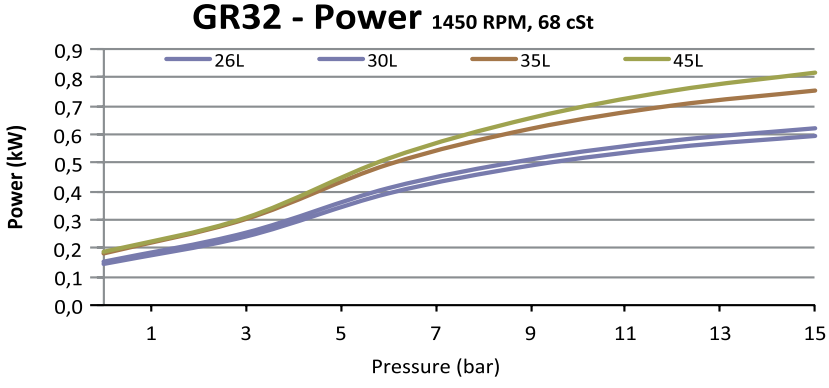

Grampelhuber GmbH | www.grampelhuber.at
A-4810 Gmunden/Österreich
T: +43 (0)7612-64902-0 office@grampelhuber.at

GR40 performances

FLOW

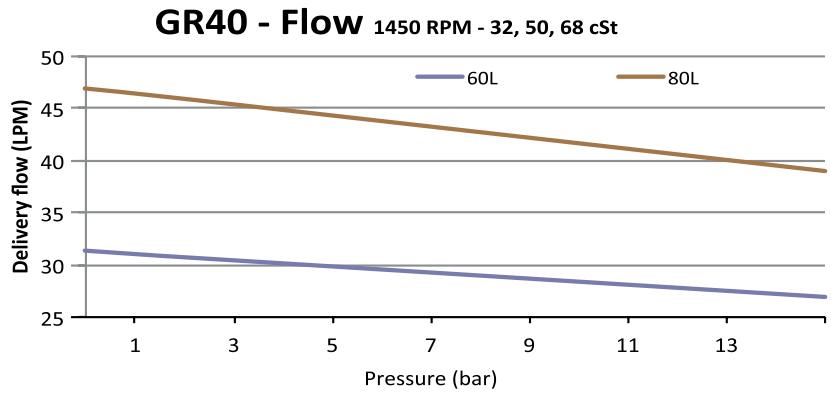

POWER

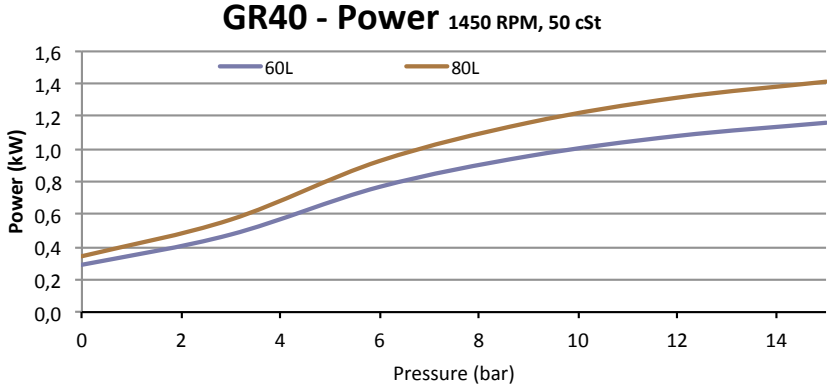

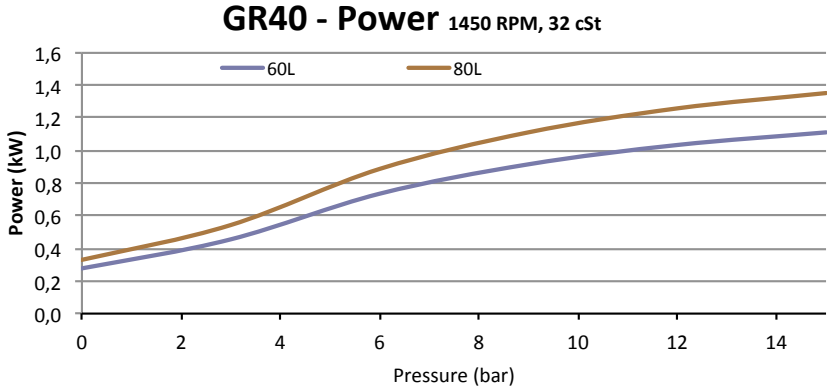

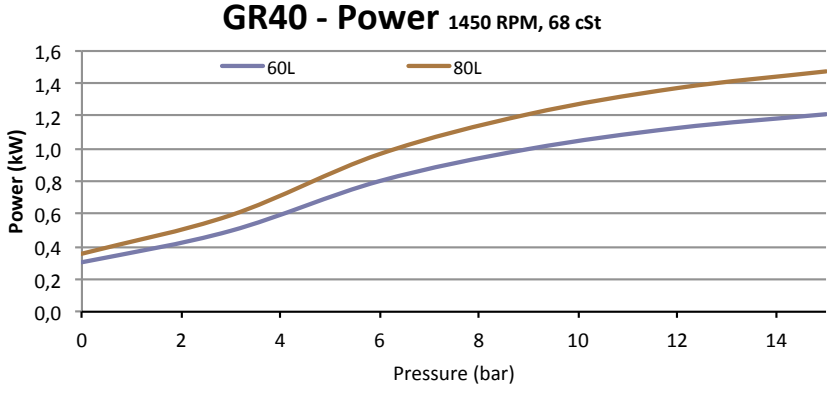

GR45 performances

FLOW

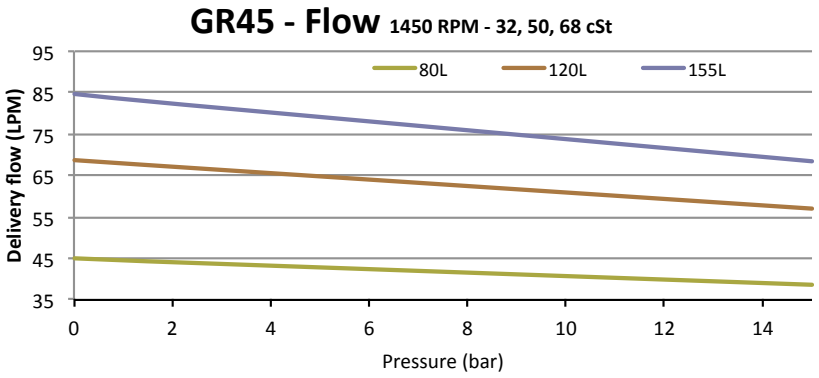

POWER

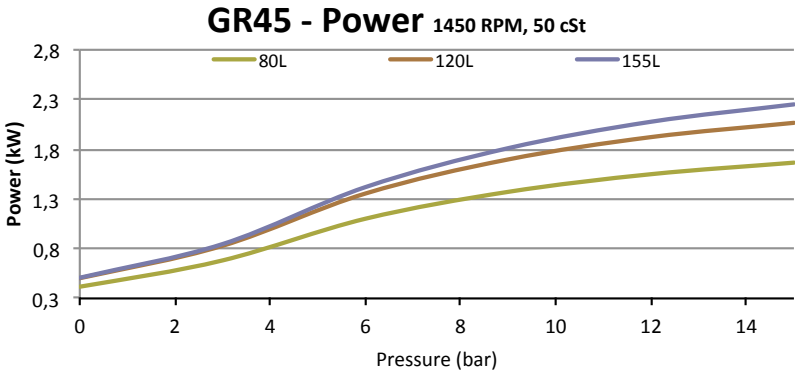

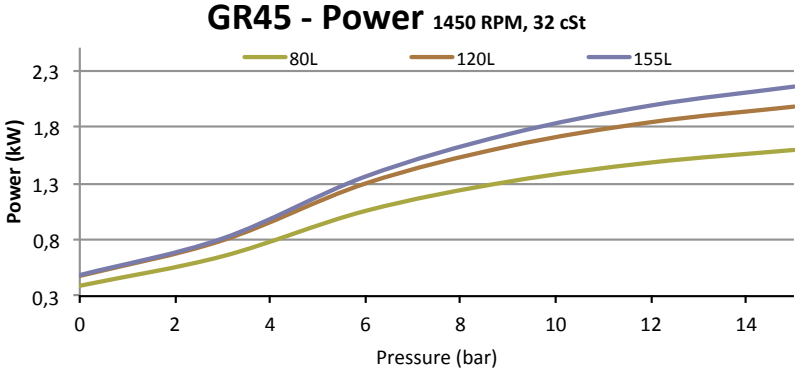

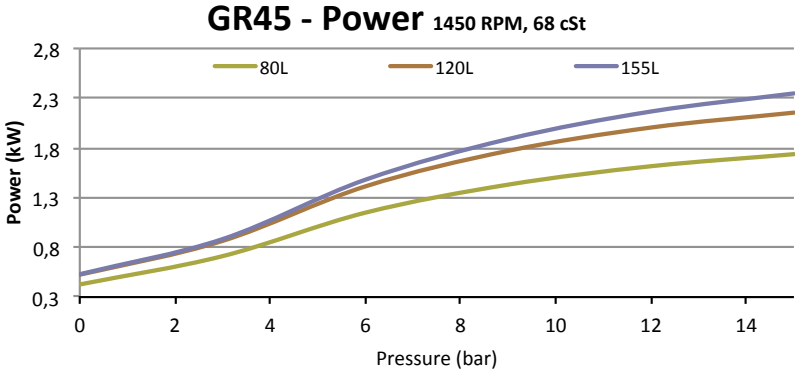

Grampelhuber GmbH | www.grampelhuber.at
A-4810 Gmunden/Österreich
T: +43 (0)7612-64902-0 office@grampelhuber.at

GR60 performances

FLOW

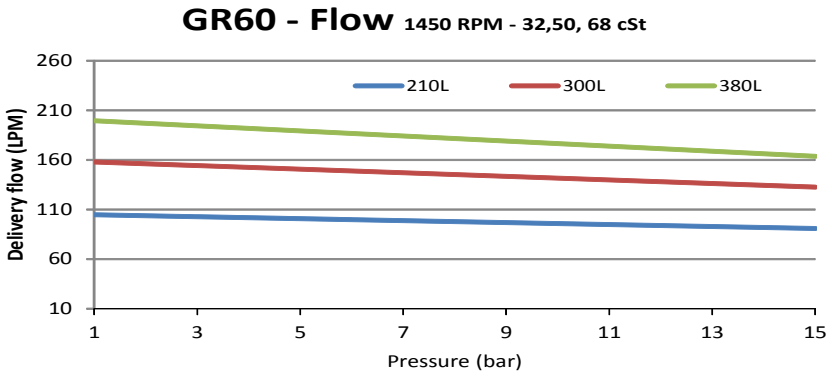

POWER

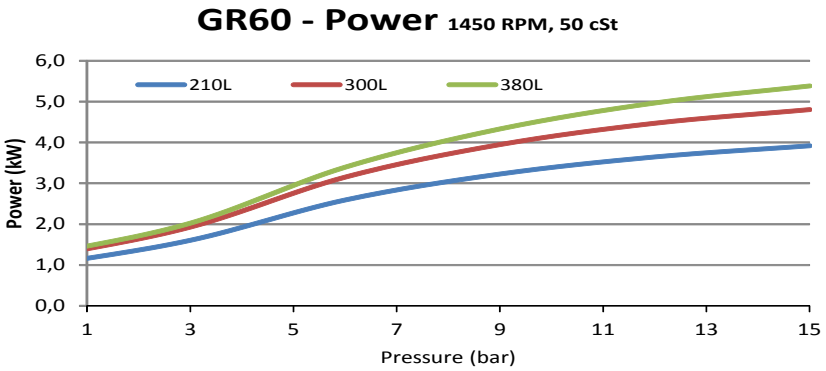

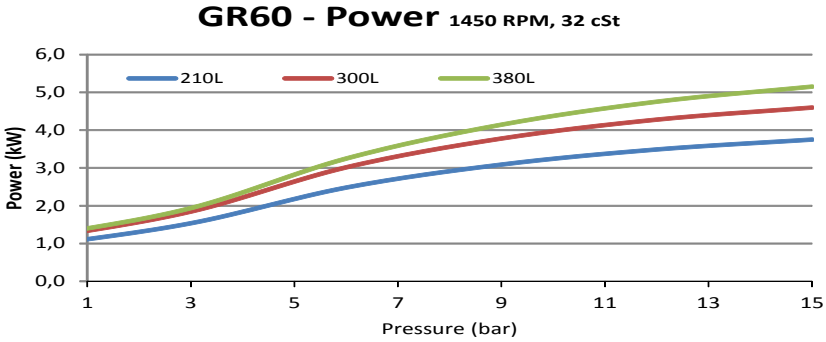

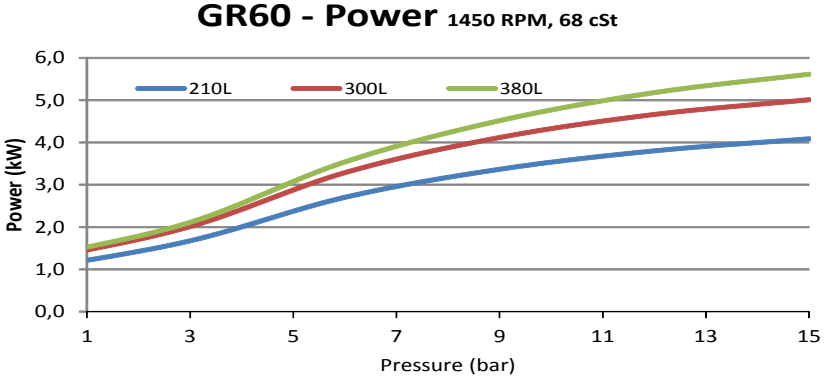

Ordering code / Codici di ordinazione

Type *Tipo*	Class *Classe*	Flows *Portate*	Shaft type *Tipo albero*	Pump body *Corpo pompa*	Body treatment *Trattamenti corpo*	Relief valve *Valvola di sicurezza*	Seals *Guarnizioni*	Screws *Viti*	Drain configuration *Configurazione drenaggio*	Rotation *Rotazione*
GR 32	**SMT8B SMAT8B**	**26**	Male shaft & flange *Albero maschio & flangia* **(none)****	Standard **(none)** Aluminium *Alluminio* Optional **G** Cast iron *Ghisa*	Standard **(none)** Optional **OX** Anodic coating (only with all. body) *Rivestimento anodico (solo corpo in all.)*	Standard **(none)** Optional **RF1 (5bar)** **RF2 (10bar)** **RF3 (15bar)**	Standard **(none)** NBR Optional **V** **FKM** **E** **EPDM**	Standard **(none)** Optional **HD** surface treatment *trattamento superficiale*	Standard **(none)** D2 Optional **D1*** ** **D3*** ** **D4*** **	Standard **(none)** DX clockwise *orario* Optional **SX** counter clockwise *antiorario*
		30								
		35								
		45								
GR 40	**SMT8B SMAT8B**	**60**								
		80								
GR 45	**SMT8B SMAT8B**	**80**	Hollow shaft *Albero cavo* **AC14*** **AC19*** **AC24*** **AC28*** **AC38***							
		120								
		155								
GR 60	**SMT8B SMAT8B**	**210**								
		300								
		380								

* Please, check the table at page 5 / *Consultare la tabella a pagina 5.*
** Please, check the table at page 13 / *Consultare la tabella a pagina 13.*
*** Please, check below chapter / *Consultare il capitolo seguente.*

Drain configurations codes / Codici configurazioni drenaggio

D1

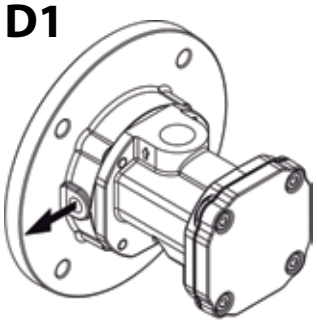

D2

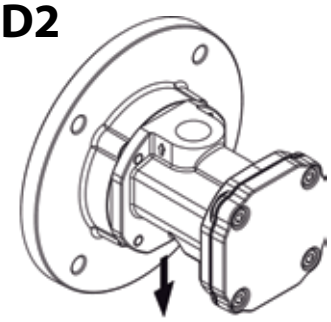

D3

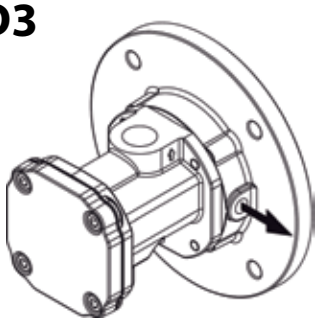

D4

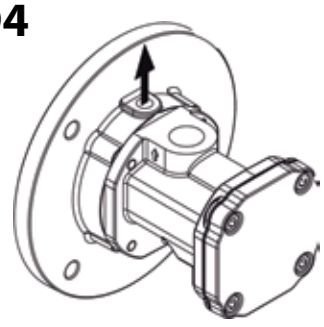

SETTIMA® research & innovation, always

Grampelhuber GmbH | www.grampelhuber.at
A-4810 Gmunden/Österreich
T: +43 (0)7612-64902-0 office@grampelhuber.at

SMT8B male shaft / SMT8B albero maschio

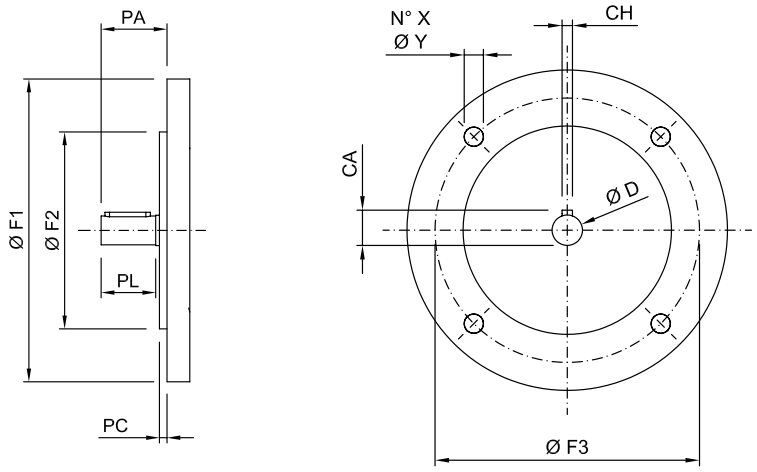

Type *Tipo*	Flange / *Flangia*				Shaft / *Albero*			Pump / *Pompa*
	ØF2	ØY	ØF3	ØF1	PL	ØD	CH	PA
GR 32	100	11	125	150	35	19	6	41
GR 40	125	14	160	188	36	19	6	42.5
GR 45	125	14	160	188	55	32	10	64.5
GR 60	160	18	200	235	55	32	10	65.5

SMT8B double shaft / SMT8B doppio albero

Possibility to have hollow shaft from one side (motor side) and shaft from the other side, see below picture.
Disponibile anche con albero cavo (lato motore) e albero maschio dal lato opposto come da immagini seguenti.



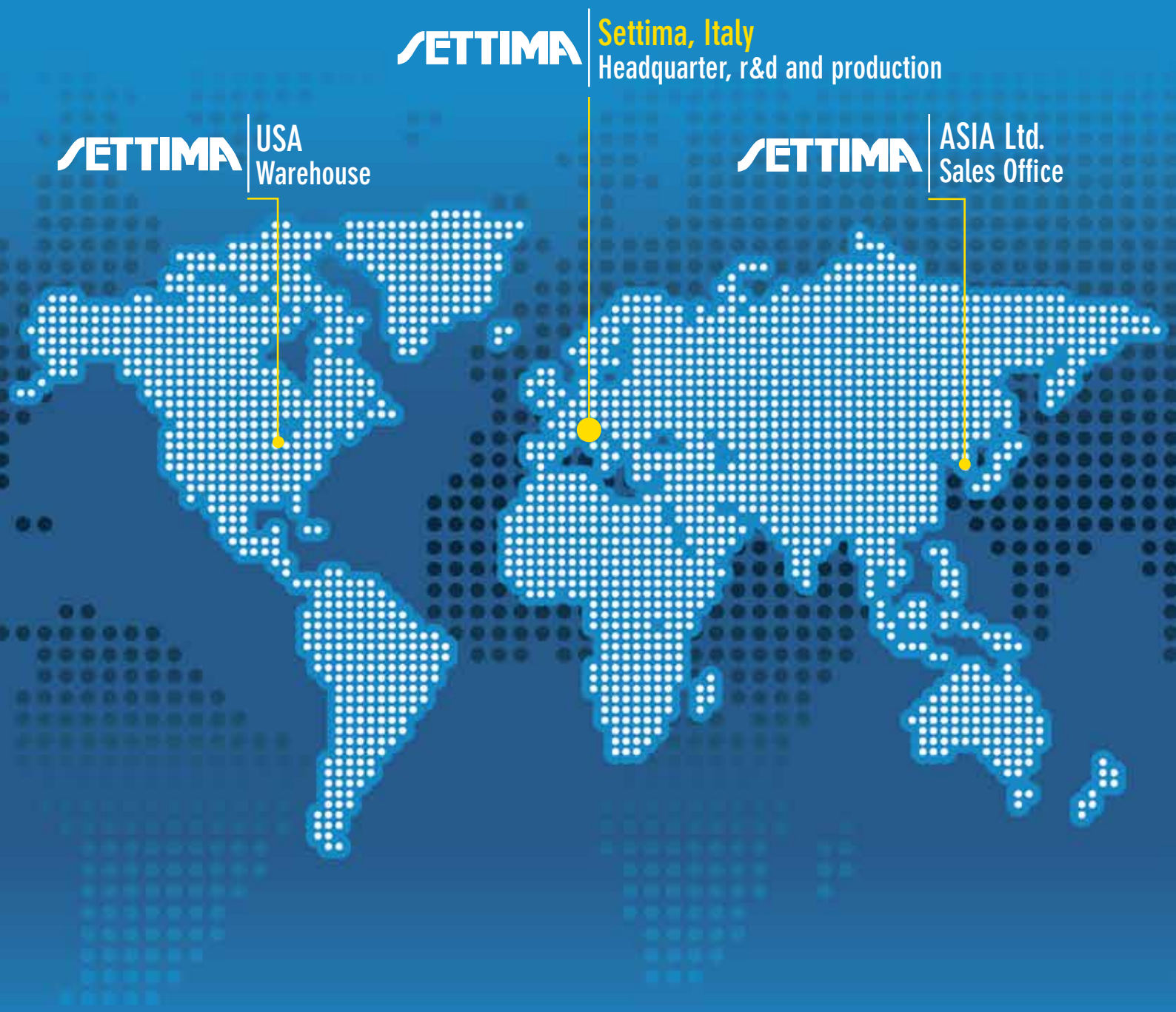

Settima Meccanica Srl
Settima - 29020 Piacenza (Italia)
tel. +39 0523.3650
fax +39 0523.3650299
www.settima.it
info@settima.it

SETTIMA
research & innovation, always

APR2015

Grampelhuber GmbH | www.grampelhuber.at
A-4810 Gmunden/Österreich
T: +43 (0)7612-64902-0 office@grampelhuber.at