Low Speed, High Torque Motors

Spool Valve: J, H, S, T, and W Series
Disc Valve: 2,000, 4,000 Compact, Delta, 4,000, 6,000, and 10,000 Series
VIS: VIS 40, and VIS 45 Series

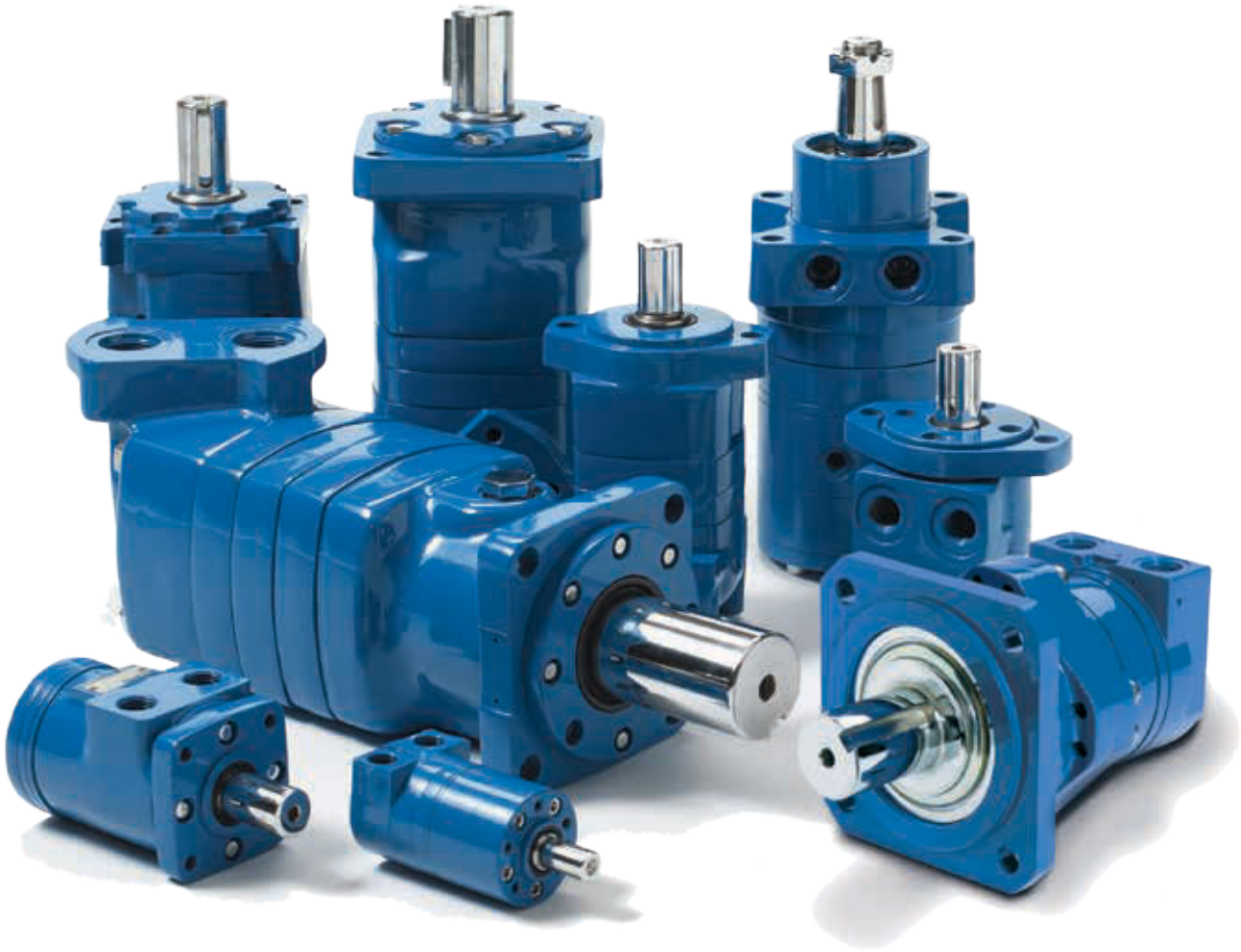

EATON
Powering Business Worldwide

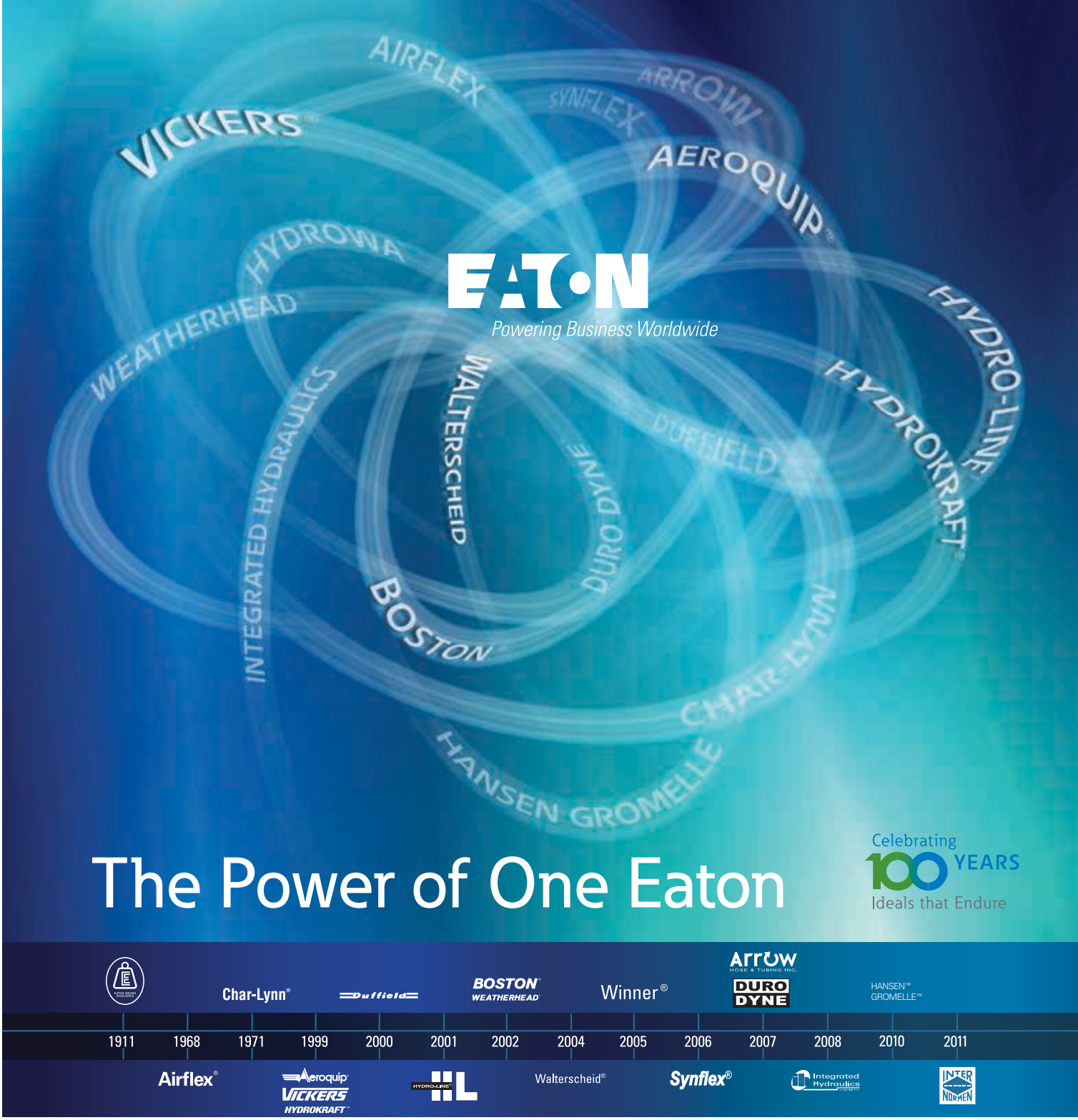

EATON
Powering Business Worldwide

There's a certain energy at Eaton. It's the power of integrating the competencies of some of the world's most respected names to build a brand you can trust to meet every power management need. The energy created supports our commitment to powering business worldwide.

As the world's demand for high-efficiency hydraulic systems for mobile and stationary applications increase, Eaton is helping to solve these challenges more reliably, efficiently, and sustainably. Our goal is simple; to provide unique solutions across a wide range of markets that keep businesses on the leading edge of change. Visit Eaton.com/hydraulics/fusion.

That's the power of One Eaton.

Serving eight key segments - sharing one focus



Alternative Energy

Making energy sources technically practical and economically sound requires the kind of control made possible by high-quality components. When Eaton is on the inside, you will experience the reliable, consistent performance to create and capture energy—making renewable energy an every-day energy.



Discrete Manufacturing

Produce at peak efficiency with the superior precision and repeatability of Eaton products. Eaton hydraulic components provide the precise control and consistent operation required for virtually every step in your manufacturing operation. With Eaton, we'll help you redefine the meaning of raw productivity.



Oil & Gas

As the oil & gas industry continues to face further globalization and consolidation, large-scale organizations that can meet your needs in every corner of the world are more difficult to find. At Eaton, our portfolio of products is only surpassed by our tremendous reach.



Processing

Whatever your industry, no matter which processes you manage, Eaton parts and systems help keep you up and running. Our components make equipment more efficient and easier to use, so you get optimal machine performance and maximum productivity.



Agriculture & Forestry

There's a reason farming and forestry are called "working the land." These segments involve some of the hardest work and longest hours of any sector in the economy. Your productivity and profitability depend on the way you manage time and tasks.



Commercial Vehicles

Eaton technologies can make your driving operation more successful. Greater comfort and productivity help increase driver retention, while reduced emissions, leaks, and noise improve environmental performance. Increased efficiencies overall mean lower costs and higher net revenue.



Material Handling

Eaton hydraulic systems provide the precise control and consistent operation required for material handling and utility work. With a broad selection of products and solutions built in, Eaton helps make you a master of your domain.



Construction & Mining

When you work on a large scale, even the details are big. You need to trust every part of the equipment that lets you handle construction and mining jobs. For reliable components that deliver consistent performance in extreme conditions, turn to Eaton.

Eaton is a leading diversified power management company

Eaton provides reliable, efficient and safe power management for a growing number of industries.

Understanding and helping our customers succeed

- Listening and understanding to requirements and business drivers
- Delivering solutions with value propositions to solve the critical business needs

Knowing what's important to our customers and integrating that knowledge into the fabric of our business

- ...to deliver innovative, quality products
- ...to respond fast
- ...to provide dedicated customer service and support around the globe

Our strength is global reach with local responsiveness and support

- Customers served in more than 150 countries
- Diverse channels ensure reliable availability and support
- Design and engineering teams provide support for standard products and custom solutions
- Eaton experts offer efficient product and application training

Contents

	SECTION	PRODUCT NUMBER PREFIX	PAGE
	Introduction to Eaton Motors		A-3
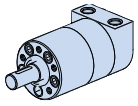	J Series	(129-)	B-1-1
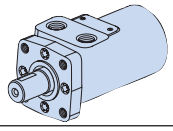	H Series	(101-)	B-2-1
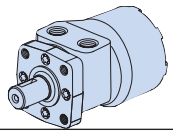	S Series	(103-)	B-3-1
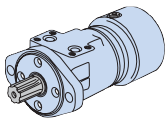	T Series & "T" Series w/Parking Brake	(158-) (185-)	B-4-1
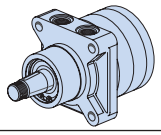	W Series & W Series w/Parking Brake	(162-)	B-5-1
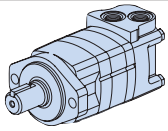	2000 Series	(104-, 105-, 106-, 193-)	C-1-1
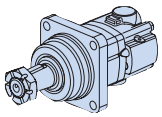	4000 Compact Series	(167-,169-, 170-)	C-2-1
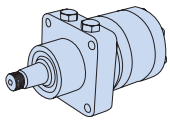	Delta Series	(184-)	C-3-1
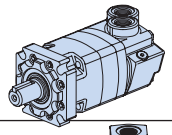	4000 Series	(109-, 110-, 111-)	C-4-1
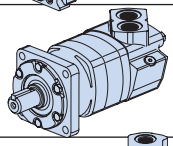	6000 Series	(112-,113-,114-)	C-5-1
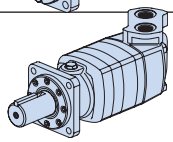	10,000 Series	(119-, 120-, 121-)	C-6-1
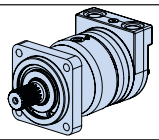	VIS 40 & VIS 40 w/Parking Brake	(168-,176-, 177-, 178-, 180-, 182-)	D-1-1
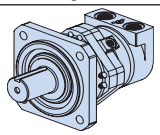	VIS 45	(155-,156-, 157-, 173-, 174-, 183-)	D-2-1

Contents

Char-Lynn, Hydraulic Motors	A-3
Circuits	A-4
Design Flexibility	A-5
Motor Application Information	A-6
Optional Features	A-8
Two Speed Motors	A-11
Seal Guard	A-12
Viton Seals	A-12
High Pressure Seals	A-13
Braking Solution	A-14
Free Running Geroler Sets/Gerotor Sets	A-15
Speed Sensors	A-16
Shuttle Valve	A-17
Case Porting	A-18
Low Speed Valving	A-19
Nickle Plating Option	A-20
Integral Valves for 2000 Series	A-21
Bolt-On Valve Solutions for Char-Lynn Motors	A-22
Overcenter Packages for H&T Series Motors	A-23
Overcenter Packages (w/shuttle) for H&T Series Motors	A-25
Cross-Over Relief Packages for H&T Series Motors	A-27
Overcenter Packages for 2000 Series Motors	A-28
Overcenter Packages (w/shuttle) for 2000 Series Motors	A-30
Cross-Over Relief Packages for 2000 Series Motors	A-32
ATEX Certification	A-33
Fluid Recommendations	A-34

Char-Lynn, Hydraulic Motors

Introduction

For the past 45 years, the Char-Lynn®, brand has been recognized as the industry leader in low-speed, high-torque (LSHT) hydraulic motor technology. The name Char-Lynn was coined by one of the original pioneers in the hydraulic industry, the late Mr. Lynn Charlson. The hydraulic motor designs developed by Lynn Charlson and his team use what is termed as the Orbit principle. This principal is the center of the designs pioneered by the Char-Lynn team and is based on the fact that a gerotor or Geroler®, star orbits multiple times (typically 6 to 8 times depending on specific star and ring geometry) for each complete single revolution within the outer ring. This principle is what gives Char-Lynn motors their reliable high power density and extremely compact size. Only three primary moving components are needed to transmit torque through the motor: star, drive and output shaft. Shaft rotation can be instantly reversed by changing inlet / outlet flow while generating equal torque in either direction. A variety of displacement sizes are available in each motor family that provide a wide variety of speeds and torque ranges from any series of motors. The results are compact, modular, economical designs that can be easily customized to suit a wide variety of application needs.

Motor options include:

- Displacement size (cubic inches or cc's per revolution)
- Output shaft size and type
- Mounting flange type
- Porting interface
- A wide selection of special features such as integrated brakes, sensors, integrated cross-over relief valves, 2-speed capability, manifold valve packages, and environmental protection suited for corrosive environments.

Char-Lynn motors are extremely reliable, compact, and have tremendous power density. They provide a way to meet many needs for cost-effective power transmission requirements. Multiple motors can be driven by a single power source (pump) and controlled using a wide array of valves and variable displacement pump controls. Motors can even be configured with electronic sensors to provide digital feedback for sensing both motor direction and output speed.

The Char-Lynn motor range consists of three major types based on the type of valving used to distribute fluid through the Orbit gear set (geroler or gerotor). These three types are:

- **Spool Valve**
- **Disc Valve**
- **VIS (Valve-in-Star)**

Migration from one valve technology to the next enhances motor performance in terms of efficiency, pressure rating, displacements, and motor output torque capability.

To help guide you to proper product selection, a quick guide is provided below. In addition, you will find product highlights, summaries of motor option features and benefits, application formulas, and detailed specifications for each motor family.

MOTOR QUICK-GUIDE (BASED ON MAXIMUM CONTINUOUS RATINGS)

Type	Output Torque Nm [lb-in]	Pressure bar [psi]	Flow lpm [gpm]	Side Load kg [lbs]
Spool Valve	441 [3905]	165 [2400]	62 [18]	725 [1600]
Disc Valve	2700 [24000]	205 [3000]	170 [45]	4500 [10000]
VIS (valve-in-star)	4520 [40000]	345 [5000]	170 [45]	8640 [19000]

Hydraulic Circuit

Hydraulic drives can be divided into two basic types: 1) Traction Drives and 2) Non-Traction drives. Traction drives (also referred to as propel drives) are used to propel a wheeled or track-driven vehicle. Non-traction drives (also referred to as work drives) are used for some other vehicle function such as a winch, auger, conveyor or rotate function for a boom or crane.

These rotary drive systems can also be classified as either open loop or closed-loop circuits.

Open Loop Circuit

In an open loop circuit, oil is returned to a reservoir before returning to the motor. The motor/pump circuit is open to atmosphere. In an open loop circuit, the drive speed of a motor may be controlled by, varying the flow with a valve, changing pump input speed (engine or pump input speed), or varying flow using a variable displacement pump. Often these circuits use counter-balance valves to accomplish dynamic braking functions, and provide a flow (pressure) source to release a spring-applied, hydraulic release brake. It is common to use a shuttle valve for directing flow to release the spring-applied pressure-release brake. A shuttle valve is basically a double check valve that directs flow from the A or B side of the loop and is often the source of flow to create the pressure to release a brake.

Typical applications using open loop circuits include:

- Truck-Mounted Booms and cranes (boom – rotate function)
- Aerial Work Platforms (boom – rotate function)
- Winches
- Conveyors
- Grapples
- Others

Closed Loop Circuit

In a closed loop circuit, there is no reservoir between the inlet and outlet of the motor and pump. The pump outlet is connected directly to the motor inlet and the motor outlet is connected directly to the pump inlet. This circuit is, in theory, closed to atmosphere. Motor speed is typically controlled using a variable displacement pump. This pump can also control motor output shaft direction (CW or CCW rotation).

These systems provide dynamic control of flow through the closed loop of the motor/pump circuit. They are, however, subject to some inherent internal leakage that results in the inability of the loop to hold a load over time. This is why a static brake is typically found in such systems to mechanically hold the load. Brakes used include mechanical caliper, disc or ball-ramp type brakes. In addition, spring-applied, hydraulic release brakes are used. The T Series Motor w/ Parking Brake meets this need.

Typical applications using closed loop circuits include:

- Vehicle traction drives (propel function)
- Conveyors
- Winches
- Others

Design Flexibility

Char-Lynn motors are truly built for high torque low speed. A lot of power is derived from this small package. This power advantage provides the designer with a product that can be used for overall compactness in addition to taking full advantage of the high pressure ratings typical of present day hydraulic components.

Char-Lynn hydraulic motors allow the designer to put the power where it is needed. Furthermore, the motors can be mounted directly on the driven device away from the original power source which eliminates the need for other mechanical linkages such as chains, sprockets, belts, pulleys, gears, rotating drive shafts, and universal joints. Several motors can be driven from the same power source and can be connected in series or parallel to each other.

Durability

The design and method of manufacture of three critical drive train components: valve drive, shaft drive, and output shaft, give these motors durability. Consequently, the motors stand up against high hydraulic pressures.

Performance Rating

Our method of rating these motors recognizes that at slower speeds and flow, higher pressures and torque are permitted. Hence, our performance data shows the complete flow range (down to 1 liter per minute or 1/4 gallon per minute) and speed range (down to one revolution per minute depending on application).

Controllable Speeds

Char-Lynn motors operate at low speeds that remain very near constant even when load varies. Shaft speed is varied smoothly, easily and economically using simple inexpensive controls. Also, these motors are reversible. Consequently, direction of shaft rotation can be changed instantly with equal output torque in either direction.

Dependable Performance

Highly precise manufacturing of parts provide consistent, dependable performance and long life even under varying conditions.

Reliability

Char-Lynn motors are self contained, with hydraulic fluid providing lubrication. These motors are completely sealed so they can operate safely and reliably in hostile environments such as dust, dirt, steam, water, and heat and provide reliable performance.

High Efficiencies

Char-Lynn motors efficiently convert the supplied hydraulic fluid's pressure and flow into a low speed high torque rotational output. This efficiency minimizes the rate of hydraulic system heat generation and maximizes shaft horsepower.

Case Drain and Shuttle Valve Options

Many hydraulic systems can benefit from the use of a system case drain. Char-Lynn motors provide this feature built in. One of the advantages for case drain flow is that contamination is flushed from the system. This flushing also aids in cooling the system and lowering the case pressure which will extend motor seal life. With a case drain line in place, oil pressure in the gear box (Bearingless motor applications) can also be controlled. In applications where more system cooling and flushing is required, a shuttle valve option is available in W series, 2000, 4000 Compact, 4000, 6000 series, VIS 30, VIS 40 and VIS 45 series motors.

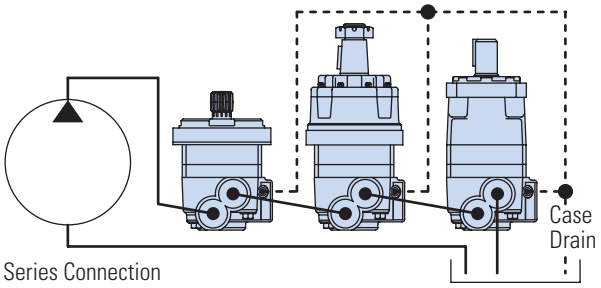

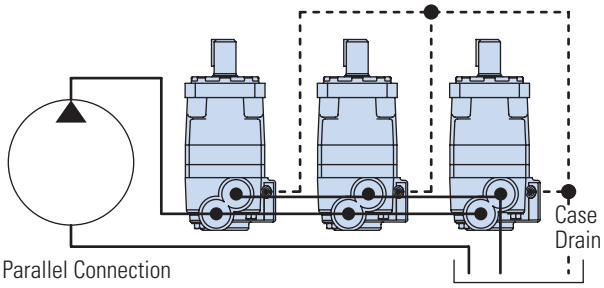

Motor Application Information

Vehicle Drive Calculations

Step One — Calculate Motor Speed (RPM)

$$RPM = \frac{2.65 \times KPH \times G}{R_m} \qquad RPM = \frac{168 \times MPH \times G}{R_I}$$

where KPH = vehicle speed (kilometers per hour)
where MPH = vehicle speed (miles per hour)
R_m = rolling radius of tires (meter)
R_I = rolling radius of tires (inch)
G = gear reduction ratio (if any) between motors and wheels. If no gear box or other gear reduction devices are used G = 1.

If vehicle speed is expressed in m/second, multiply by 3.6 to convert to KPH. If vehicle speed is expressed in ft./second, divide by 1.47 to convert to MPH.

Step Two — Determine Rolling Resistance

Rolling resistance (RR) is the force required to propel a vehicle over a particular surface. The values in Table 1 are typical of various surfaces per 1000 lb. of vehicle weight.

$$RR = GVW \times \rho \text{ (kg) (lb)}$$

where GVW = gross (loaded) vehicle weight lb/Kg
ρ = value from Table 1

TABLE 1- ROLLING RESISTANCE COEFFICIENTS FOR RUBBER TIRES ON VARIOUS SURFACES

Surface	r
Concrete, excellent	.010
Concrete, good	.015
Concrete, poor	.020
Asphalt, good	.012
Asphalt, fair	.017
Asphalt, poor	.022
Macadam, good	.015
Macadam, fair	.022
Macadam, poor	.037
Snow, 2 inch	.025
Snow, 4 inch	.037
Dirt, smooth	.025
Dirt, sandy	.040
Mud	.037 to .150
Sand, Gravel	.060 to .150
Sand, loose	.160 to .300

Step Three — Tractive Effort to Ascend Grade

The largest grade a vehicle can ascend is called its "gradability." Grade is usually expressed as a percent rather than in degrees. A rise of one meter in ten meters or one footrise in ten feet of travel is a 1/10 or 10 percent grade.

$$GR = GVW (\sin \theta + \rho \cos \theta)$$

TABLE 2

Comparison Grade (%)	Table Slope (Degrees)
1%	0° 35′
2%	1° 9′
5%	2° 51′
6%	3° 26′
8%	4° 35′
10%	5° 43′
12%	6° 5′
15%	8° 31′
20%	11° 19′
25%	14° 3′
32%	18°
60%	31°

Step Four — Determine Acceleration Force (FA)

The force (FA) required to accelerate from stop to maximum speed (KPH) or (MPH) in time (t) seconds can be obtained from the following equation:

$$FA = \frac{KPH \times GVW(kg)}{3.6\,t}$$

FA = Acceleration Force (Newton)
t = Time (Seconds)

$$FA = \frac{MPH \times GVW\ (lb)}{22\,t}$$

FA = Acceleration Force (lb)
t = Time (Seconds)

Step Five — Determine Drawbar Pull

Drawbar Pull (DP) is total force available at the drawbar or "hitch" after the above forces have been subtracted from the total propelling force produced by the hydraulic motors. This value is established as either:

1. A goal or objective of the designer.
2. A force required to pull a trailer (Repeat steps two through four above using trailer weight and add the three forces together to obtain DP).

Motor Application Information

Vehicle Drive Calculations

Step Six — Total Tractive Effort

The tractive effort (TE) is the total force required to propel the vehicle and is the sum of the forces determined in Steps 2 through 5.

TE = RR + GR + FA + DP (Kg. or lb.)

- RR — Force required to overcome rolling resistance
- GR — Force required to climb a grade
- FA — Force required to accelerate
- DP — Drawbar pull desired

Wind resistance forces can usually be neglected. However, it may be wise to add 10% to the above total to allow for starting resistances caused by friction in bearings and other mechanical components.

Step Seven — Calculate Hydraulic Motor Torque (T)

$$T = \frac{TE \times R_m}{N \times G \times Eg} \text{ (Nm / Motor)}$$

$$T = \frac{TE \times R_l}{N \times G \times Eg} \text{ (lb - in/Motor)}$$

Where: N = number of driving motors
Eg = gear box mechanical efficiency

Step Eight—Wheel Slip

If the torque required to slip the wheel (TS) is less than the torque calculated in Step 7, the performance objectives cannot be achieved.

$$TS = \frac{W \times f \times R_m}{G \times Eg} \text{ (Nm / Motor)}$$

$$TS = \frac{W \times f \times R_l}{G \times Eg} \text{ (lb - in/Motor)}$$

Where: f = coefficient of friction
W = loaded vehicle weight over drive wheel

	Coefficient of friction (f)
Steel on steel	0.15 to 0.20
Rubber tire on dirt	0.5 to 0.7
Rubber tire on asphalt	0.8 to 1.0
Rubber tire on concrete	0.8 to 1.0
Rubber tire on grass	0.4

It may be desirable to allow the wheel to slip to prevent hydraulic system overheating when excessive loads are imposed should the vehicle stall. In this case TS should be just slightly larger than T.

Step Nine — Motor Radial Load Carrying Capacity

When a motor is used to drive a vehicle with the wheel mounted directly on the motor shaft or rotating hub, the Total Radial Load (RL) acting on the motor shaft is the vector summation of two forces acting at right angles to each other.

Weight (W) supported by the wheel

Total radial load (RL) on motor shaft

Propelling Force $\frac{T}{R}$

$$RL = \sqrt{W^2 + \left(\frac{T}{R}\right)^2}$$

Refer to radial load rating of each motor series.

Shaft Torque (T)

$$\frac{T = q \ DP}{2 \ p}$$

$$\frac{\text{bar} \times \text{cm}^3/\text{rev}}{62.8} = \text{Nm}$$

$$\frac{\text{PSI} \times \text{in}^3/\text{rev}}{6.28} = \text{lb} - \text{in}$$

Shaft Speed (N)

$$N = \frac{\text{Flow}}{\text{Displacement}}$$

$$RPM = \frac{1000 \times \text{l/min}}{\text{cm}^3/\text{rev}} \qquad RPM = \frac{231 \times \text{GPM}}{\text{in}^3/\text{rev}}$$

Power (into motor)

$$Kw = \frac{\text{bar} \times \text{l/min}}{600} \qquad HP = \frac{\text{PSI} \times \text{GPM}}{1714}$$

Power (out of motor)

$$Kw = \frac{Nm \times RPM}{9549} \qquad HP = \frac{\text{lb-in} \times RPM}{63{,}025}$$

where:
Kw = Kilowatt
HP = Horsepower
LPM = Liters per Minute
GPM = Gallons per Minute
Nm = Newton Meters
lb-in = Pound inch
Bar = 10 Newtons per Square Centimeter
PSI = Pounds per Square Inch
q = Displacement

Optional Features

OPTIONAL FEATURE	BENEFIT
2 Speed motors	Allows motor to have two displacements (higher speed has lower torque)
Seal Guard	Prevents physical damage to shaft seal from foreign debris
High pressure Shaft Seal	More robust shaft seal that can withstand high case pressure spikes
Environmental protection	Epoxy coating for demanding application in harsh environment
Nickel Plated Shaft Nickel Plated Body	For highly corrosive environment or food/sanitary applications
Integrated Parking Brake	Spring applied hydraulic release brake
Mechanical Disc Brake	Bolt on caliper brake for wheel motor applications
Free running option	Improved mechanical efficiency at high-speed/high-flow conditions
Speed sensors	To collect speed and/or direction information from a motor and provide electric signal
Shuttle valve	Redirect some low pressure oil for increased cooling in closed loop applications
Case port	To increase lubrication and flushing of the motor and reduce case pressure , extend seal life
Internal check valves	Relieves the case pressure to the low pressure port
Low speed valving	For better efficiency and smooth running at low speed conditions (<200 RPM)
Vented Two-Stage seal	Extends shaft seal life
Viton seals	For higher temperature or chemical resistance applications
Integral cross over valving	Cost effective design that limits the differential pressure across the motor
Metric Shafts, Ports, & Mounts	EU specific threads
Reverse Rotation	Allows clockwise shaft rotation with B port pressurized
ATEX	Certifies motor to be used in explosive environments

Optional Features

OPTIONAL FEATURES	TYPICAL APPLICATIONS*													
	WINCH	SWING DRIVES	SWEEPER BRUSH DRIVES	AUGER	INDUSTRIAL CONVEYOR	CAR WASH	TURF PROPEL	IRRIGATION REELS	MIXERS/GRINDERS	PLASTIC INJECTION MOLDING	TRACTION DRIVES	TRENCHER CHAIN DRIVES	SALT SAND SPREADER	MARINE WINCHES
2 Speed Motors	x			x				x			x			x
Seal Guard			x				x		x			x		
Viton Seals					x					x				
High Pressure Shaft Seal	x								x					
Environmental protection					x	x							x	x
Nickel Plated Shaft					x	x							x	x
Nickel Plated Body					x									
Integrated Parking Brake	x	x			x			x			x			x
Mechanical Disc Brake							x				x			
Free running option		x												
Speed sensors					x			x	x	x		x	x	
Shuttle valve							x		x		x	x		
Case port	x	x	x	x	x		x		x		x	x		
Internal check valves					x	x	x							
Low speed valving		x			x		x				x		x	
Vented Two-Stage seal					x	x	x				x			
Integral cross over valving	x	x		x										x
Metric Shafts, Ports, & Mounts	x	x	x	x	x	x	x	x	x	x	x	x	x	x
Reverse Rotation					x									

* These features are not limited to these applications. Final configuration depends on individual application needs.

Optional Features

FEATURE DESCRIPTION	CATALOG PAGE NUMBER	SPOOL VALVE MOTORS					DISC VALVE MOTORS					VIS MOTORS	
		J Series	H Series	S Series	T Series	W series	2000 Series	4000 Compact Series	4000 Series	6000 Series	10000 Series	VIS 40	VIS 45
2 Speed motors	A-11	—	—	—	—	—	0	—	—	—	0	0	0
Seal Guard	A-12	—	0	0	0	—	0	0	0	0	0	0	0
Viton seals	A-12	0	0	0	0	0	0	0	0	0	0	0	0
High pressure Shaft Seal	A-13	—	0	0	0	—	0	0	—	—	—	—	—
Environmental protection	A-13	0	0	0	0	0	0	0	0	0	0	0	0
Nickel Plating Options	A-20	0	0	0	0	0	0	0	0	0	0	—	—
Integrated Parking Brake	A-14	—	—	—	0	0	—	—	—	—	—	0	0
Mechanical Disc Brake	A-14	—	—	—	—	0	0	0	—	—	—	—	—
Free running option	A-15	0	0	0	0	0	0	0	0	0	0	0	0
Speed sensors	A-16	0	0	0	0		0	0	0	0	0	—	—
Shuttle valve	A-17					0	0	0	0	0	—	0	0
Case port	A-18	0	0	0	0	0	S	S	S	S	S	S	S
Internal check valves	A-18	S	0	S	0	0	—	—	—	—	—	—	—
Low speed valving	A-19	—	0	0	0	S	—	—	—	—	—	—	—
Vented Two-Stage seal	A-20	—	0	0	0		—	—	—	—	—	—	—
Integral cross over valving	A-21	—	—	—	—		0	0	—	—		—	—
Metric Shafts, Ports, & Mounts	–	0	0	0	0	0	0	0	0	0	0	0	0
Reverse Rotation	–	0	0	0	0	0	0	0	0	0	0	0	0
ATEX Certification			0	0	0		0	0	0	0	0	0	0

0 Optional
S Standard
— Not applicable

Two Speed Motors

This option is available on all 2000, 10,000, VIS 40 and VIS 45 motors.

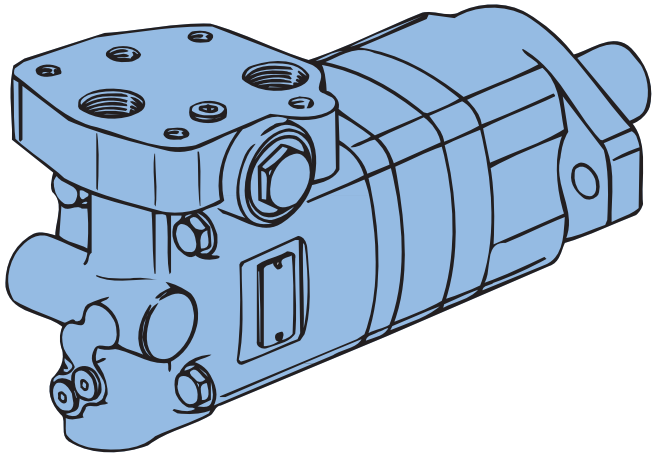

Features:

This option gives the user the ability to switch the displacement of the motor thus providing a different speed at a different torque without changing the input flow or pressure. An external three way valve is required for shifting the pilot pressure port between signal pressure (HSLT) and low pressure (LSHT).

Two speed motors are available with a return line closed center shuttle for closed circuit applications.

Benefits:

- Two operating speeds and torque levels with one motor
- Two selectable performance ranges in one motor package

Application:

- Conveyors
- Winches
- Traction drives
- Augers
- Irrigation/utility cable reels

Seal Guard

This option is available on H, S, T, 2000, 4000, 6000, 10,000, VIS 40 and VIS 45 series motors

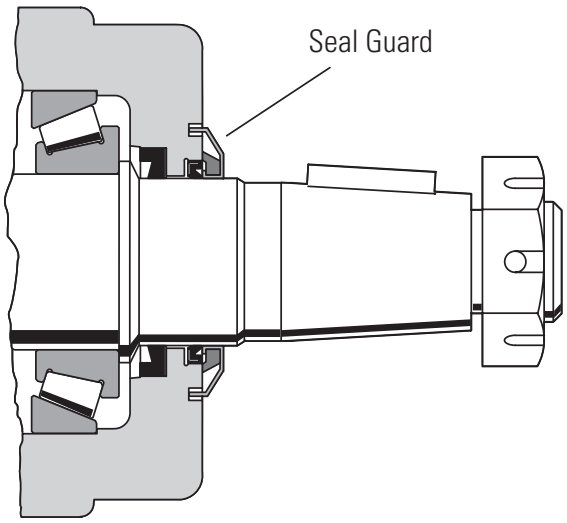

Features:

This option consists of a metal shield that protects an internal wiper seal. The shield is interference- fit on the output shaft and moves with the output shaft. For added protection, the shield is recessed into a groove in the bearing housing face.

Benefits:

Centrifugal force causes foreign debris to be forced away from the high pressure shaft and dust seal area. The seal does not seal hydraulic fluid, instead it protects the standard seals from damage caused by foreign debris.

Applications:

- Street sweepers
- Industrial sweepers
- Lawn and turf equipment (ZTR)
- Harvesting machinery
- Mining equipment

Viton Seals

This option is available on all Char-Lynn motors.

Features:

Higher chemical compatibility and temperature tolerance make Viton the material of choice for demanding application in extremely corrosive and harsh environments.

Benefits:

- Longer seal life in chemically aggressive environment
- Operating Temperature Range of -25°C to 200°C [-13°F to 392°F]

Applications:

- Industrial conveyors
- Plastic injection molding

Note: Minimum Viscosity Levels must still be maintined

High Pressure Seals

This option is available on H, S, T and 2000 series motors.

Features:

Eaton has introduced a high-pressure shaft seal option for its H, S, T and 2000 series motors. The seal geometry is optimized for applications that operate under extreme conditions. The seal geometry increases the clamping force of the sealing lip against the output shaft to prevent seal leakage at extreme pressure conditions. Case pressure forces the lip of the seal to clamp more tightly against the output shaft. The result is a seal the handles high pressure spike conditions without failure. The seal is designed to withstand case pressures up to 200 bar [2900 PSI] at 150 rpm.

For reference, the standard seal can withstand case pressure up to:

- 100 bars (1500 PSI) for H, S, T motors
- 140 bars (2000PSI) for 2000 Series
- 100 bars (1500 PSI) for 4000 Series
- 70 bars (1000 PSI) for 6000 Series
- 20 bars (300 PSI) for the 10,000 Series
- 20 bars (300 PSI) for VIS 40, 45

Benefits:

- Increases ability to handle high-pressure spike conditions.
- Eliminates the use of case port line in application with intermittent extreme operating conditions.
- Can be an effective alternative to additional case port plumbing.
- Operating Temperature -40°C to 150°C [-40°F to 300°F]

Special Notes:

1. Intermittent operation is defined as 10% of every minute.
2. The standard seal with case port option is preferred for maximum life – especially for continuous duty at high pressure conditions.
3. Seal kits are available to convert motors with the standard shaft seal to the high pressure shaft seal. (complete motor seal kits include high pressure shaft seal).
4. Minimum Viscosity Levels must be maintained.

Applications:

- Harvesters
- Sweepers
- Turf Equipment
- Wood Chippers
- Stump Grinders
- Skid Steer Loader Attachments (often loaders have no case line available)
- Any application with extreme intermittent operating conditions or where no case return line is available.

Part Numbers:

H Series – Kit No. 60572-000

S Series – Kit No. 60578-000

T Series – Kit No. 60579-000

Shaft Seal – Part No. 14778-001

2000 Series – Kit No. 61329-000.

Shaft Seal – No. 14857-001

Brake Solutions

Integrated brake options are available for all T, W, and VIS 40 series motors. Mechanical bolt-on packages are available for all W, 2000 and 4000 Compact series motors.

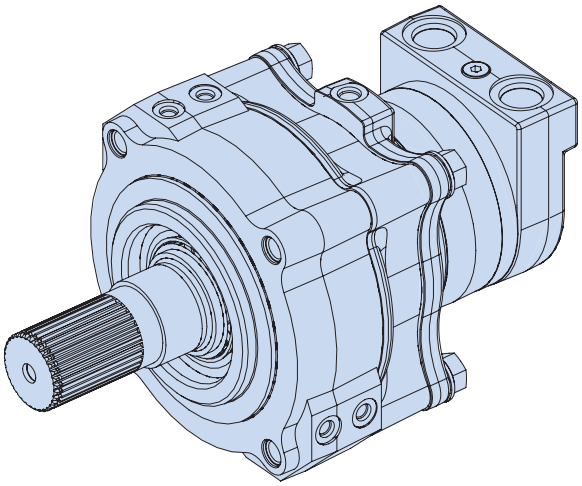

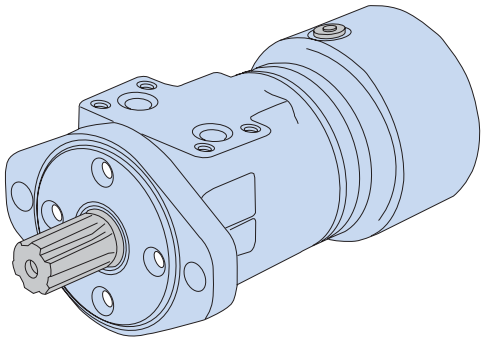

Features:

Eaton continues to develop and bring new brake solutions to market that are performance matched to each motor series. These include:

- T Series with Integrated Parking Brake
- W Series with Integrated Parking Brake
- VIS Series with Integrated Parking Brake

In addition, Eaton brake motors can be mated with bolt-on valve packages to provide dynamic braking hydraulically using state of the art counter-balance valve technology.

There are also a variety of bolt-on mechanical brake options including Hayes brake system. This compact brake package can be used on 2000 Series and W Series wheel motors.

Benefits:

- Complete compact system package
- Performance-matched brake / motor solution
- Increases design flexibility
- Reduces assembly costs and simplifies service requirements
- Streamlines inventory and order processing.
- Ability to direct port release pressure (eliminate brake release hose correction)

Applications:

- Aerial Work Platforms
- Boom Lifts
- Track Cranes
- Forestry Grapples
- Winches
- Traction Drives
- Anywhere load holding is a requirement in a LSHT motor application

Free Running Geroler Sets/Gerotor Sets

This feature is available in all Char-Lynn motors.

Features:

The free running option is accomplished using a specially precision-machined gerotor/geroler assembly. This feature increases the clearance between the star and mating ring, allowing the motor to turn more freely with less mechanical drag. The increased clearance also improves lubrication across the wear surfaces of the gerotor star and ring and provides a greater pressure-relieving flow path reducing pressure spikes. Flow is by-passed internally across the star tips, reducing shock loads to the main drive components. This feature provides an effective method for reducing shock loads to the main drive components.

Benefits:

- Suited for applications with rapid stop/start or rapid reversals.
- Reduces starting pressure and increases starting torque efficiency.
- Reduces pressure spikes through the orbit gear set.
- Also suited for applications with high-pressure spikes from rapid reversals.

Applications:

- Harvesters
- Stump Grinders
- Skid Steer Loader Attachments
- Machine Tools
- Especially suited for continuous high speed/ high flow applications.

Special Notes:

Volumetric Efficiency will be reduced with the free-running option.

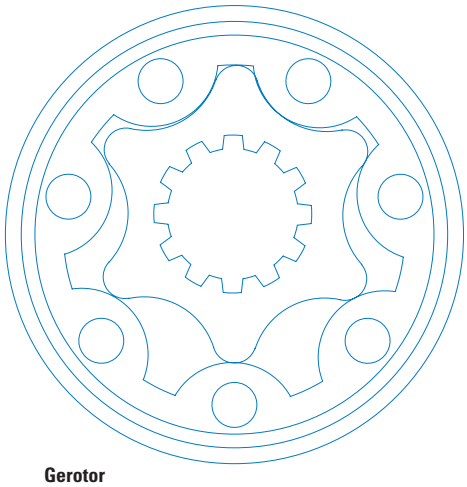

Gerotor

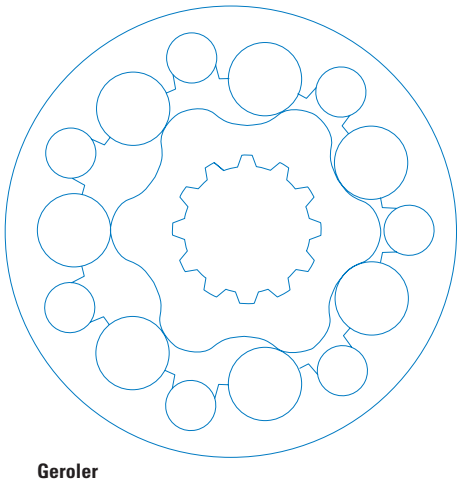

Geroler

Gerotor or Geroler?

The H series motor uses a Gerotor while the rest of the Char-Lynn motors use a Geroler. The difference is shown in the picture below:

Essentially a Geroler, has rolls added to the lobes of the outer ring of the Orbit gear set. These rolls act as a roller bearing and reduce friction, increase mechanical efficiency and reduce wear in systems with low fluid viscosity. In addition, the Geroler type typically provides smoother performance at low speed conditions. The basic formula and guideline to determine whether a gerotor or Geroler should be used is as follows:

20 x psi / RPM = SUS (use this formula to determine minimum fluid viscosity)

RPM = speed of output shaft in revolutions per minute

SUS = minimum viscosity measured in SUS.

The recommended viscosity limits are as follows:

1) A Gerotor Orbit gear set requires a minimum fluid viscosity of 100 SUS or the value calculated by the formula 20 psi/RPM = SUS.
2) A Geroler Orbit gear set requires a minimum fluid viscosity of 70 SUS.

In addition, applications running at less than 100 rpm should consider using a Geroler motor.

Speed Sensors

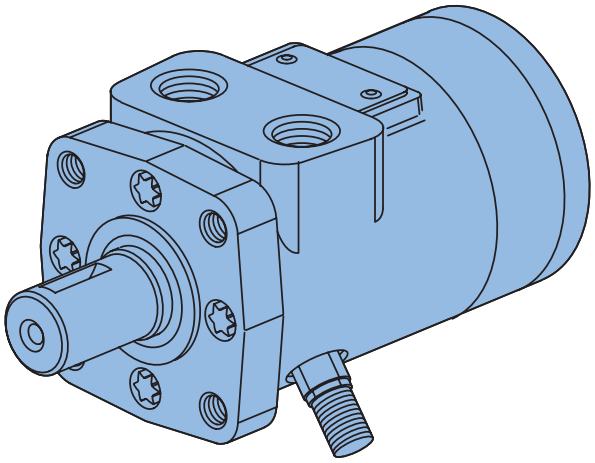

Note:

The speed sensor option does NOT include read-out display. Possible sources for read-out display include:

Eaton Corporation Durant Products 901 South 12 Street Watertown, WI 57094 — Phone 1-800-289-3866.

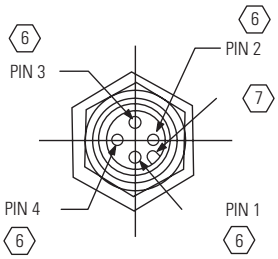

M12 Connector, PIN Detail

Features:

Eaton has developed speed sensors specifically designed for LSHT motors.

The single output speed sensor:

This design is rugged and fully protected against accidental reverse polarity or short circuit hook up. A built in pull up resistor simplifies installation with control systems. This sensor is fully compatible with the mobile vehicle electrical systems and gives a reliable digital on/off signal over a wide speed range and temperature range. The sensor is field-serviceable; no factory setting or shimming is required.

The dual output speed sensor:

This sensor provides both speed and direction information. Its design is based on the field proven technology of our standard sensor and is designed for off road environments. The new sensor is based on the principle of quadrature.

- The first version speed sensor has two output signals 90° out of phase. Each output provides one pulse per target.
- The second version has a speed signal that is twice the output pulses per revolution and it also has a direction signal. (Direction not available on spool motors)

Benefits:

These speed sensors provide vital information that can be collected and interpreted by a PLC or other device.

Applications:

- Salt/Sand Spreaders
- Irrigation Drives
- Machine Tools
- Mixers/Grinders
- Industrial Conveyors
- Food Processing Equipment
- Underground Boring Equipment

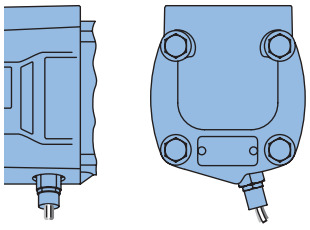

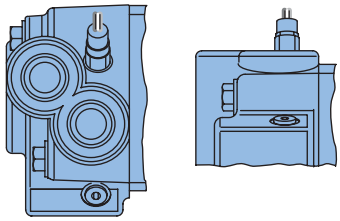

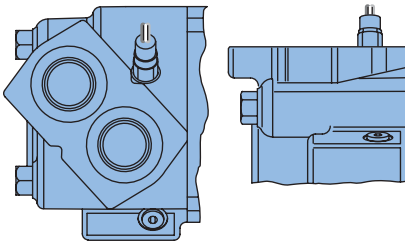

TECHNICAL INFORMATION

Motors	Speed Sensor Pulses Per Rev	Quadrature Pulses Per Rev
J,H,S,T,W	15	60
2000 series	30	60
4000 series	30	72
6000 series	30	80
10,000 series	30	60

Single and Two Outputs:

Supply Voltage: 8 to 24 Vdc (compatible with 12V vehicle systems

Supply Current: 20 mA max. (Vs) (including internal pull-up resistor)

Output Voltage: Low < .5 Vdc @ 10 mA; output is open collector with 10kW pull-up resistor

M12 Connector (version 1)

Pin 1 = Power supply

Pin 2 = Output one

Pin 3 = Common

Pin 4 = Output two

M12 Connector (version 2)

Pin 1= Power Supply

Pin 2 = Direction

Pin 3 = Common

Pin 4 = Speed signal

Shuttle Valve

Lubricating Shuttle

The shuttle valve option is available in W, 2000, 4000, 6000, and VIS series motors.

Features

Case Port allows for hydraulic oil to be flushed and cools the system. In applications where more system cooling and flushing is required.

Benefits

- Flushing
- Cooling
- Longer system life

Applications

- Turf Propel
- Mixers/Grinders
- Traction drives
- Trencher chain drives

Closed Loop Circuit

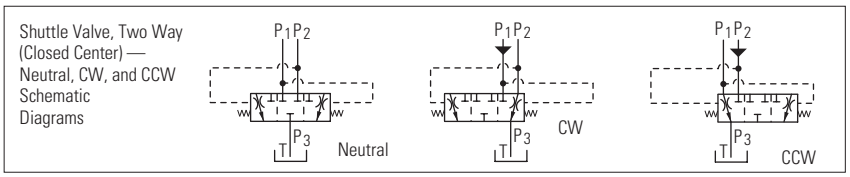

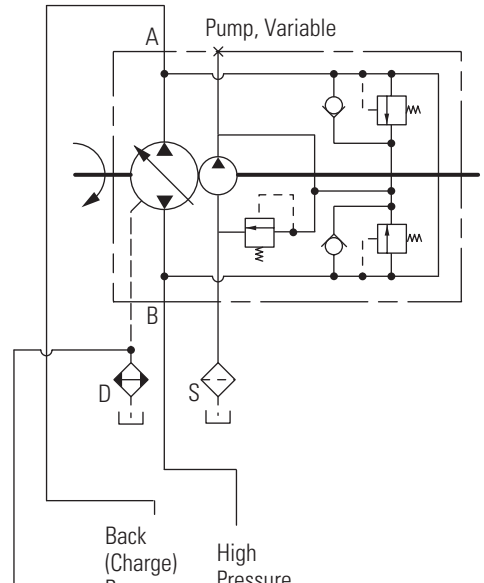

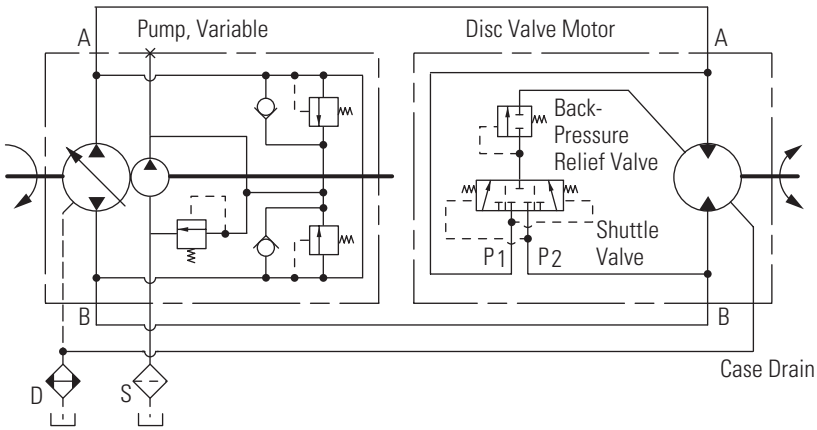

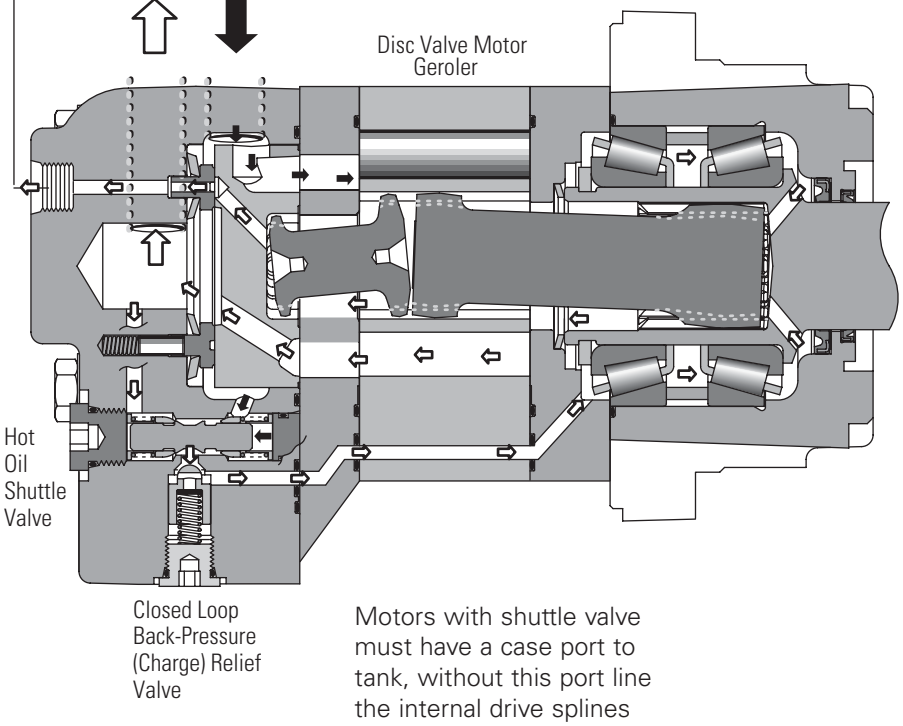

Motors with shuttle valve must have a case port to tank, without this port line the internal drive splines will not have adequate lubrication.

Typical Disc Valve Motor
Shuttle Flow with 4,5 bar [65 PSI]
Back-Pressure Relief Valve (Typical Data)
Due to Machining Tolerances, Flow May be More or Less

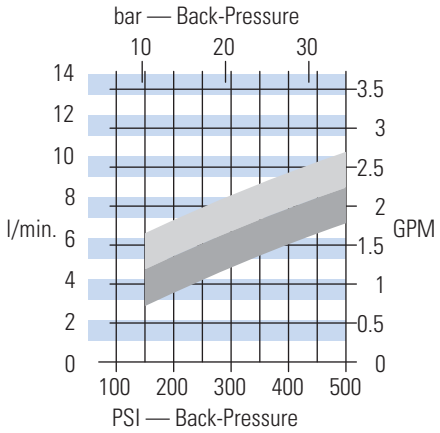

4000 Series and 6000 Series
2000 Series and 4000 Compact Series

Case Porting

This option is available on all Char-Lynn Motors.

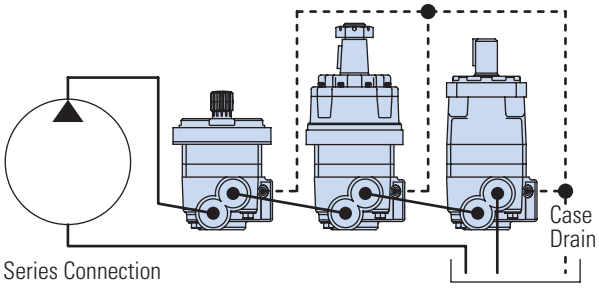

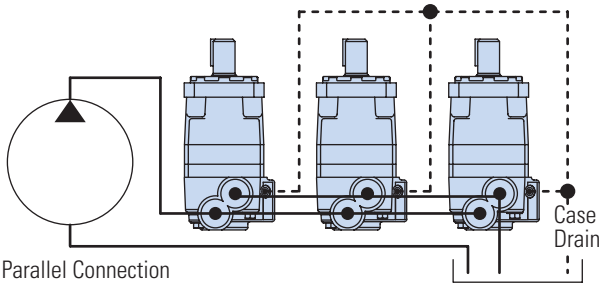

Features:

This feature provides for connection of a port line connected to the motor case.

A port is located in the motor direct to motor case pressure that allows the case pressure to be returned directly to tank. Internal leakage to the motor case cavity can be drained directly which reduces case pressure and provides flushing of the system circuit.

Benefits:

- Extends shaft seal life
- Extends thrust bearing life
- Reduces shaft seal leakage problems
- Improves flushing of the circuit to reduce system contaminates and cooling the system.

Applications:

- Especially suited for continuous running industrial applications and where motors are operating under high back pressure conditions (e.g. series circuit applications).
- Conveyers
- Car wash
- Harvesters
- Recommended for applications running with high case pressure conditions

Low Speed Valving

This option is available on H, S, T and W series motors.

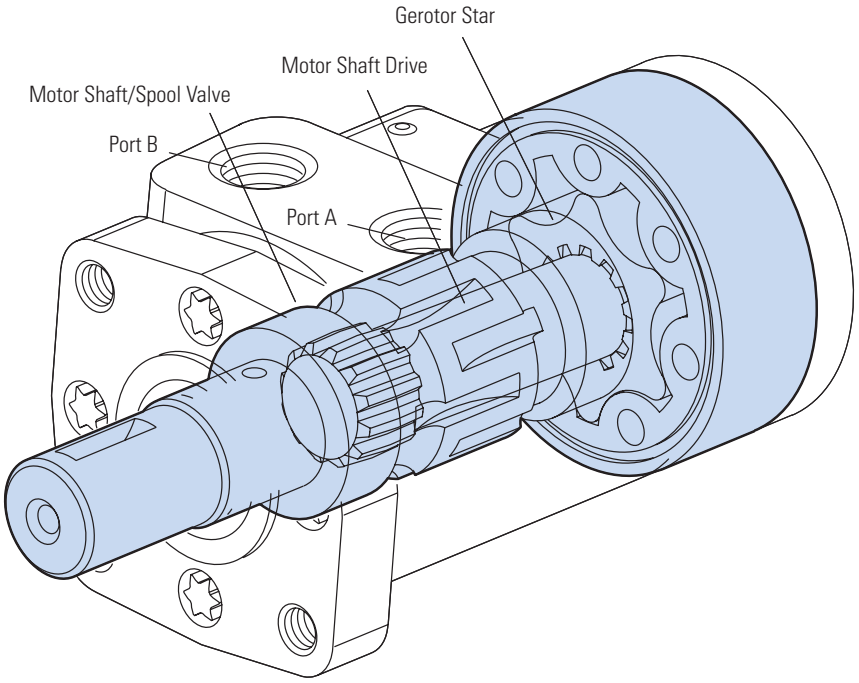

Features:

This feature optimizes the motor for low-speed performance. It greatly improves smooth operation at speeds below 200 rpm. The valving is optimized with increased sealing and tighter clearances. Motors with this feature are designed to run continuously up to 200 rpm at standard rated pressures.

Benefits:

- Improves smoothness at low speed conditions (less than 200 rpm)
- Improves volumetric efficiency

Applications:

- Salt-sand spreaders
- Machine tools
- Irrigation drives
- Consider for applications running at low speed conditions below 200 rpm.

Notes:

Motors with this valving are not intended for low pressure applications (A minimum of 300 psi delta must be maintained between A port pressure and and case pressure)

Nickel Plating Options

Full Body Nickel Plating

This option is available on H, S, T, 2K, 4K, 6K motors.

Features:

Eaton is offering full body nickel plating for Char Lynn Motors for protection against wash down environments (Note: this does not offer protection against salt water environments and the recommended option for that is epoxy paint). In order to meet the different requirements, Eaton is now offering two different nickel plating options shown below:

Benefits:

- Protection in heavy and frequent washdown environments
- Single source plating at a competitive prices
- Warranty from Eaton on nickel plating

Applications:

- Food Processing: Industrial Conveyors

Choosing the options in the model code:

- H, S, T Motors - Choose Option Y in Paint / Packaging Options
- 2000, 4000, 6000 Series - Choose Option

OPTION	DESCRIPTION	APPLICATIONS
Electroless Nickel Plating (AMS 2404D specification)	Premium process offering extremely high quality corrosion resistance	Where water contact is extremely high+
Electrolytic Nickel Plating (AMS-QQ-N-290 specification)	Good quality process offering standard corrosion resistance	Where water contact is minimal+

+ Washdown applications only – does not include salt water applications

Nickel Plated Shafts

This option is available on H, S, T, motors.

Features:

Eaton is offering Electroless nickel plating on the shafts alone for corrosion protection primarily in wash down environments.

Benefits:

- Protection in heavy and frequent washdown environments
- Single source plating at a competitive prices
- Warranty from Eaton on nickel plating

Applications:

- Car Washes
- Fishing Winches / Marine applications

Environmental Protection

(epoxy paint)
(plated shafts)

This option is available on all Char-Lynn motors.

Features:

All motors are available with a corrosion resistant coating for use in hostile environments. The Char-Lynn line is also available with the output shaft plated, or with plated shaft and entire motor exterior coating.

Benefits:

This coating protects the motor from salt water and various chemicals.

Motor output shaft plating helps eliminate seal damage caused by caustic or acidic materials.

Applications:

- Marine
- Food processing,
- Cleansing
- Fishing and agricultural applications

Integral Valves for 2000 Series

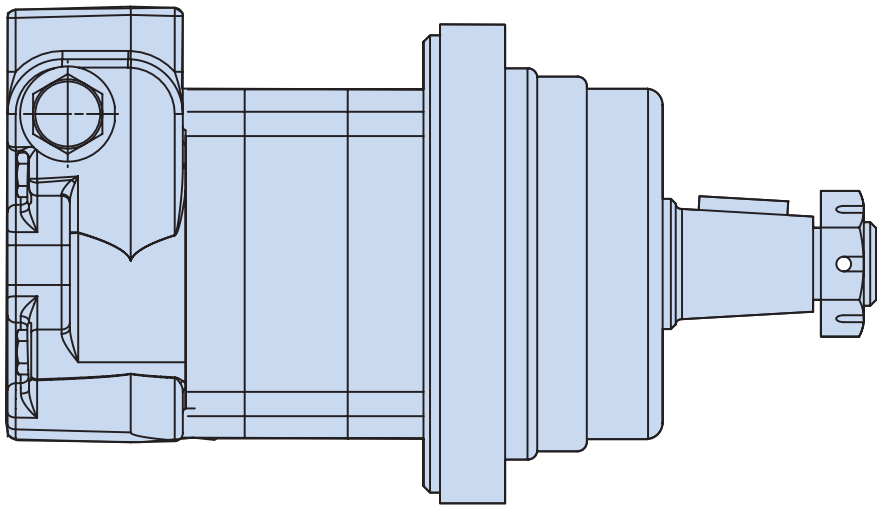

Features:

- Complete packaged system solution, single source for motors with relief valve capability
- Relief valves as close to Geroler as possible, providing added protection
- Eliminate leak points from in-line or bolt-on relief's
- Valves capable of full motor pressure
- Provides added flexibility to system design by allowing motors to have individual relief valve settings
- Simplifies assembly, purchasing and system design requirements

Benefits:

- This compact and efficient package offers increased value and cost effectiveness to designing Eaton into your applications.
- Minimizing the use of hoses, tubing and fittings will reduce production and assembly time significantly.

Applications:

- Skid-steer attachments
- Swing motors
- Brush cutters & Mowers
- Harvesting equipment
- Directional boring
- Winch
- Auger

Any place where pressure relief is optimal for system or motor performance and life

Replacement cartridges can be obtained by ordering the Item part number as listed below.

REPLACEMENT CARTRIDGES

Item part #	Item desc.	Relief valve setting
02-199291	RV5A-10-F-0-35/15	1500 PSI
02-199292	RV5A-10-F-0-35/17.5	1750 PSI
02-199293	RV5A-10-F-0-35/20	2000 PSI
02-199295	RV5A-10-F-0-35/22.5	2250 PSI
02-198563	RV5A-10-F-0-35/25	2500 PSI
02-199294	RV5A-10-F-0-35/27.5	2750 PSI
02-199296	RV5A-10-F-0-35/30	3000 PSI

Special Housings Bolt on Solutions

Cartridge Valves & Manifolds for Spool & Disk Valve Motors

We Manufacture Solutions

Designing hydraulic systems with Eaton-Vickers Cartridge Valves & Manifolds is a cost effective way of bringing your design into production well within the most demanding of production schedules. Minimizing the use of hoses, tubing and fittings will reduce production and assembly time significantly.

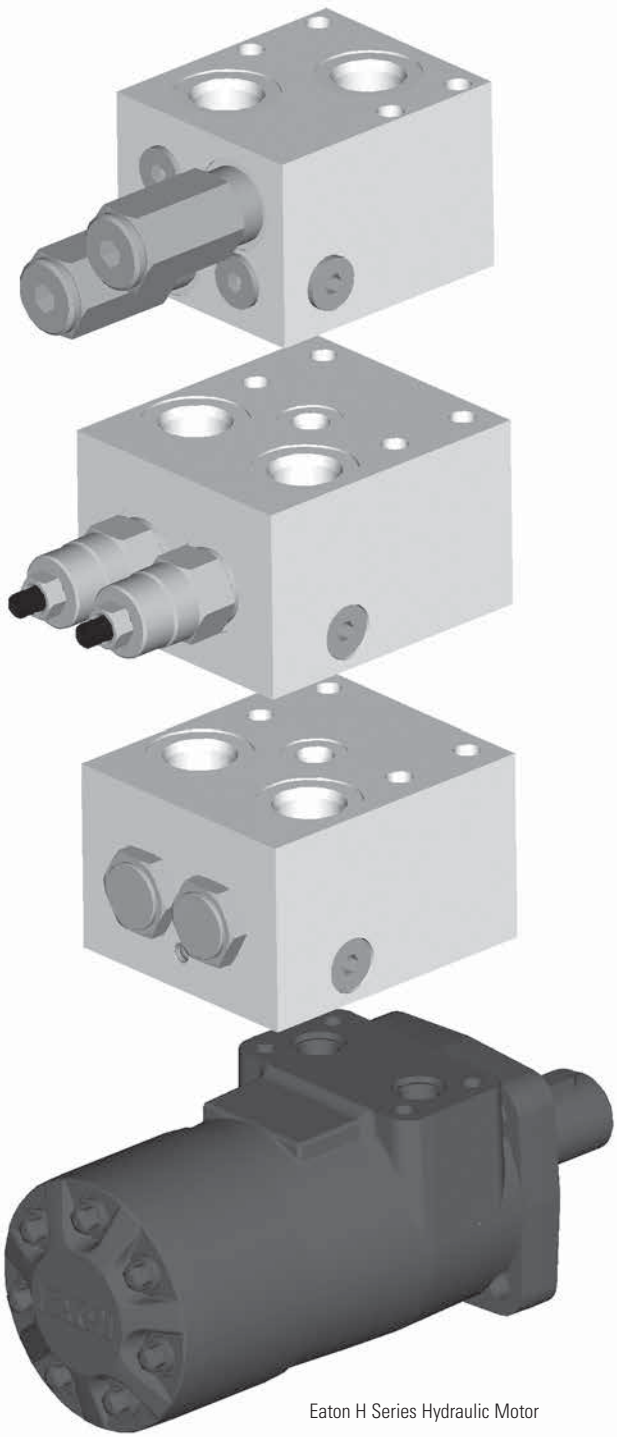

Eaton H Series Hydraulic Motor

Features

- Compatible with Eaton H & T series spool valve motors, and most 2000 series disk valve motors
- Aluminum Manifolds Anodized Black
- Pre-set cartridges to your specifications
- 100% production tested assembly
- Wide range of settings available
- Intelligent model code
- Manifolds are available with out cartridge valves, or pre-assembled and tested to your specifications
- Manifolds and motors can be supplied as a pre-assembled package
- Dual counterbalance valve (with integral shuttle valve), dual pilot operated check valve and dual cross port relief valve packages are available

1CEHT35/1CEEHT35 - Motor Mounted Valves

H & T Mounting Pattern Single and Dual Overcenter Valves

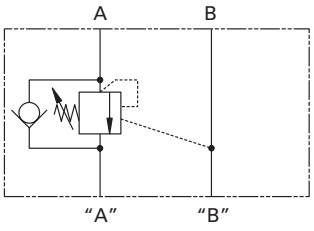

1CEHT35*A

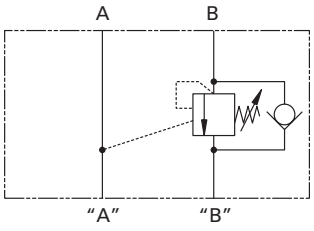

1CEHT35*B

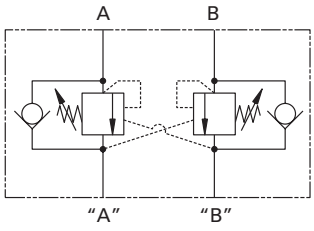

1CEEHT35

Description

Overcenter valves give static and dynamic control of loads by regulating the flow into and out of hydraulic actuators. When installed close to or within an actuator, the overcenter valve will stop runaway in the event of hose burst and if open center directional control valves are used, will allow thermal expansion relief of the hydraulic fluid. The overcenter cartridge is ideal for mounting directly into a cavity machined in the body of the cylinder, motor or rotary actuator.

The cartridge can also be mounted directly to the ports via a specifically machined body as part of a Hydraulic Integrated Circuit or single unit, or contained within one of our standard line bodies.

Single overcenter valves are normally used when the load is unidirectional, for example an aerial platform or crane and dual overcenter valves are used for controlling loads in both directional for motor applications or for cylinders going over center.

Operation

The check section allows free flow into the actuator then holds and locks the load against movement. The pilot assisted relief valve section will give controlled movement when pilot pressure is applied. The relief section is normally set to open at a pressure at least 1.3 times the maximum load induced pressure but the pressure required to open the valve and allow movement depends on the pilot ratio of the valve. For optimization of load control and energy usage, a choice of pilot ratios is available.

The pressure required to open the valve and start actuator movement can be calculated as follows:

$$\text{Pilot Pressure} = \frac{\text{(Relief Setting) - (Load Pressure)}}{\text{Pilot Ratio}}$$

Pilot Ratios

2.5:1 Best suited for extremely unstable applications such as long booms or flexible frameworks.

5:1 Best suited for applications where load varies (Standard) and machine structure can induce instability

10:1 Best suited for applications where the load remains relatively constant.

Performance Data

Ratings and Specifications

Figures based on: Oil Temp = 40°C Viscosity = 32 cSt (150 SUS)			
Rated flow			30 L/min (8 USgpm)
Max setting		Max load induced Pressure:	270 bar (4000 psi)
		Relief setting:	350 bar (5000 psi)
Cartridge material			Working parts hardened & ground steel External surface zinc plated
Body material			Standard aluminium (up to 210 bar*) Steel (up to 350 bar)
Mounting position			Unrestricted
Cavity Number			A6610 (See section M)
Torque cartridge into cavity			45 Nm (33 ibs ft)
Weight (inc cartridges)		1CEOMP35	1.6 kg (3.52 lbs)
		1CEEOMP35	1.66 kg (3.65 lbs)
Seal kit number	1CEHT35	9900834-000 (Buna-N)	9900835-000 (Viton)
	1CEEHT35	9900836-000 (Buna-N)	9900837-000 (Viton)
Recommended filtration level			BS5540/4 Class 18/13 (25 micron nominal)
Operating Temp			-30°C to +90°C (-22° to 194°F)
Leakage			0.3 milliL/min nominal (5 dpm)
Nominal viscosity range			5 to 500 cSt
Installation Kit (includes cap screws, washers, and o-rings)			9900828-000 (Buna-N) 9900829-000 (Viton)

1CEHT35/1CEEHT35 - Motor Mounted Valves

H & T Mounting Pattern Single and Dual Overcenter Valves

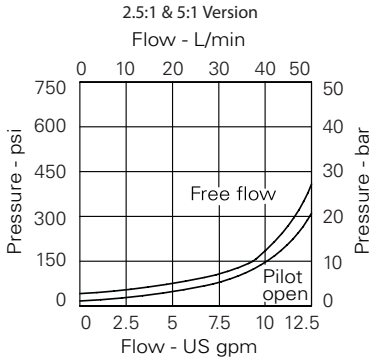

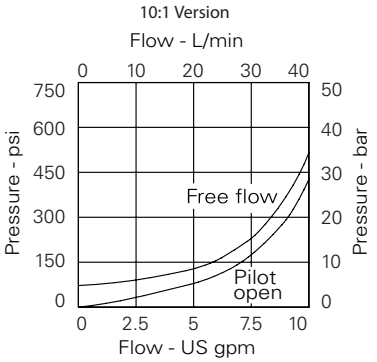

1CEEHT35 - F - A 10H - AG - 35 0 - 35 0 - S - 5

1 2 3 4 5 6 7 8 9 10 11

1 Basic Code

1CEEHT35 - Double Cartridge and Body
1CEHT35*A - Single overcenter in line A-"A"
1CEHT35*B - Single overcenter in line B-"B"

2 Adjustment Means

F – Screw Adjustment

3 Housing Material

A – Aluminum
S – Steel

4

Code	Port Size "A" & "B"	Dual Housing Number Aluminum	Steel
4W	1/2" BSP	6024221-001	6024221-003
10H	SAE 10	6024221-002	
10T	SAE 10		6024221-04

5 Port Acted Upon

A – A Port
B – B Port
AB – A & B Ports (dual)

6 Pressure Range (Cart A)

Note: Code Based on pressure in bar.

20 – (2.5:1 and 5:1): 70-210 bar. Std setting 100 bar.
(10:1): 100-210 bar. Std setting 100 bar.

35 – (2.5:1 and 5:1): 100-350 bar. Std setting 210 bar.
(10:1): 120-350 bar. Std setting 210 bar.

7 Pressure Setting (Cart A)

0 – Std factory setting
1500 – 1500 psi

8 Pressure Range (Cart B)

Note: Code Based on pressure in bar.

20 – (2.5:1 and 5:1): 70-210 bar. Std setting 100 bar.
(10:1): 100-210 bar. Std setting 100 bar.

35 – (2.5:1 and 5:1): 100-350 bar. Std setting 210 bar.
(10:1): 120-350 bar. Std setting 210 bar.

9 Pressure Setting (Cart B)

0 – Std factory setting
1500 – 1500 psi

10 Seals

S – Buna-N
SV – Viton

11 Pilot Ratio

2 – 2.5:1
5 – 5:1
10 – 10:1

Cavity plug part number

Nitrile - AXP13032-01-N
Viton - AXP13032-01-V

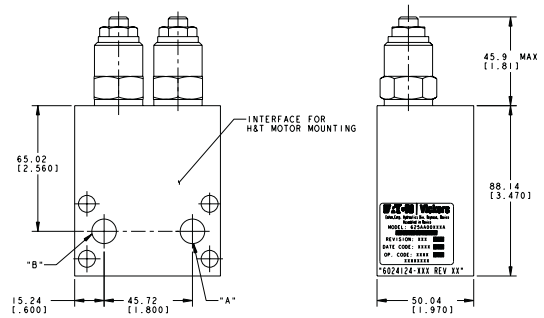

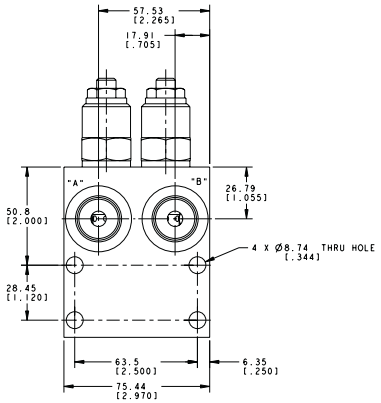

Note: For applications over 210 bar (3000 psi), please consult our technical department or use the steel body option. Tightening torque of "F" adjuster locknut - 20 to 25 Nm Check motor mounting compatibility before specifying.

1CESHHT35/1CEESHHT35 - Motor Mounted Valves

H & T Mounting Pattern Single and Dual Overcenter Valve with Brake Release Shuttle

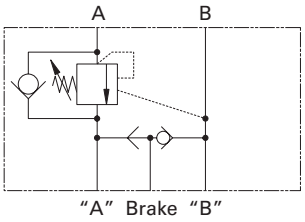

1CESHHT35*A

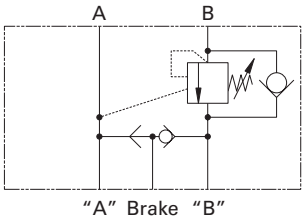

1CESHHT35*B

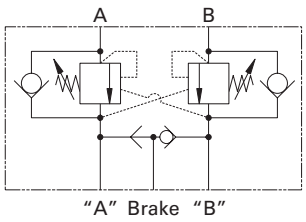

1CEESHHT35

Description

Overcenter Valves give static and dynamic control of loads by regulating the flow into and out of hydraulic actuators. When installed close to or within an actuator, the overcenter valve will stop runaway in the event of hose burst and if open center directional control valves are used, will allow thermal expansion relief of the hydraulic fluid.

These dual overcenter valves also contain a brake release shuttle valve which ensures that pressure is applied to a brake release circuit regardless of whether pressure is applied to ports "A" or "B". These multifunction valves are normally used for the static and dynamic control of systems using motors or semi-rotary-actuators.

Operation

The check section allows free flow into the actuator then holds and locks the load against movement. The pilot assisted relief valve section will give controlled movement when pilot pressure is applied. The relief section is normally set to open at a pressure at least 1.3 times the maximum load induced pressure but the pressure required to open the valve and allow movement depends on the pilot ratio of the valve. For optimization of load control and energy usage, a choice of pilot ratios is available.

The pressure required to open the valve and start actuator movement can be calculated as follows:

$$\text{Pilot Pressure} = \frac{\text{(Relief Setting) - (Load Pressure)}}{\text{Pilot Ratio}}$$

Pilot Ratios

- 2.5:1 Best suited for extremely unstable applications such as long booms or flexible frameworks.
- 5:1 Best suited for applications where load varies (Standard) and machine structure can induce instability
- 10:1 Best suited for applications where the load remains relatively constant.

Performance Data

Ratings and Specifications

Figures based on: Oil Temp = 40°C Viscosity = 32 cSt (150 SUS)			
Rated flow			30 L/min (8 USgpm)
Max setting		Max load induced Pressure:	270 bar (4000 psi)
		Relief setting:	350 bar (5000 psi)
Cartridge material			Working parts hardened & ground steel External surface zinc plated
Body material			Standard aluminium (up to 210 bar*) Steel (up to 350 bar)
Mounting position			Unrestricted
Cavity Number			A6610 (See section M)
Torque cartridge into cavity			45 Nm (33 ibs ft)
Weight (inc cartridges)		1CESHHT35	2.29 kg (5.04 lbs)
		1CEESHHT35	2.34 kg (5.15 lbs)
Seal kit number	1CESHHT35	9900834-000 (Buna-N)	9900835-000 (Viton)
	1CEESHHT35	9900836-000 (Buna-N)	9900837-000 (Viton)
Recommended filtration level			BS5540/4 Class 18/13 (25 micron nominal)
Operating Temp			-30°C to +90°C (-22° to 194°F)
Leakage			0.3 milliL/min nominal (5 dpm)
Nominal viscosity range			5 to 500 cSt
Installation Kit (includes cap screws, washers, and o-rings)			9900828-000 (Buna-N) 9900829-000 (Viton)

1CESHHT35/1CEESHHT35 - Motor Mounted Valves

H & T Mounting Pattern Single and Dual Overcenter Valve with Brake Release Shuttle

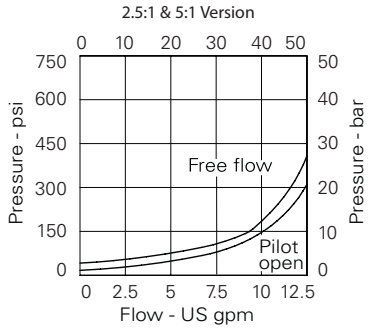

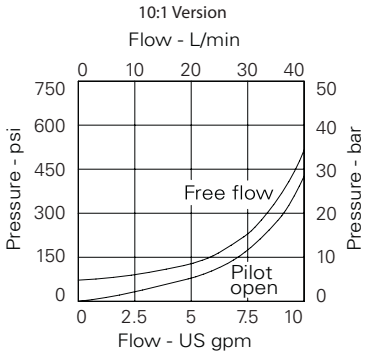

1CE*SHHT35 - F - A 10H - AG - 35 0 - 35 0 - S - 5

1 2 3 4 5 6 7 8 9 10 11

1 Basic Code

1CEESHHT35 – Double Cartridge and Body
1CESHHT35*A – Single overcenter in line A-"A"
1CESHHT35*B – Single overcenter in line B-"B"

2 Adjustment Means

F – Screw Adjustment

3 Housing Material

A – Aluminum
S – Steel

4

Code	Port Size "A" & "B"	Brake	Dual Housing Number Aluminum	Steel
4W	1/2" BSP	1/4" BSP	6025216-001	6025216-003
10H	SAE 10	SAE 4	6025216-002	
10T	SAE 10	SAE 4		6025216-004

5 Port Acted Upon

A – A Port
B – B Port
AB – A & B Ports (dual)

6 Pressure Range (Cart A)

Note: Code Based on pressure in bar.

20 – (2.5:1 and 5:1): 70-210 bar. Std setting 100 bar.
(10:1): 100-210 bar. Std setting 100 bar.

35 – (2.5:1 and 5:1): 100-350 bar. Std setting 210 bar.
(10:1): 120-350 bar. Std setting 210 bar.

7 Pressure Setting (Cart A)

0 – Std factory setting
1500 – 1500 psi

8 Pressure Range (Cart B)

Note: Code Based on pressure in bar.

20 – (2.5:1 and 5:1): 70-210 bar. Std setting 100 bar.
(10:1): 100-210 bar. Std setting 100 bar.

35 – (2.5:1 and 5:1): 100-350 bar. Std setting 210 bar.
(10:1): 120-350 bar. Std setting 210 bar.

9 Pressure Setting (Cart B)

0 – Std factory setting
1500 – 1500 psi

10 Seals

S – Buna-N
SV – Viton

11 Pilot Ratio

2 – 2.5:1
5 – 5:1
10 – 10:1

Cavity plug part number

Nitrile - AXP13032-01-N
Viton - AXP13032-01-V

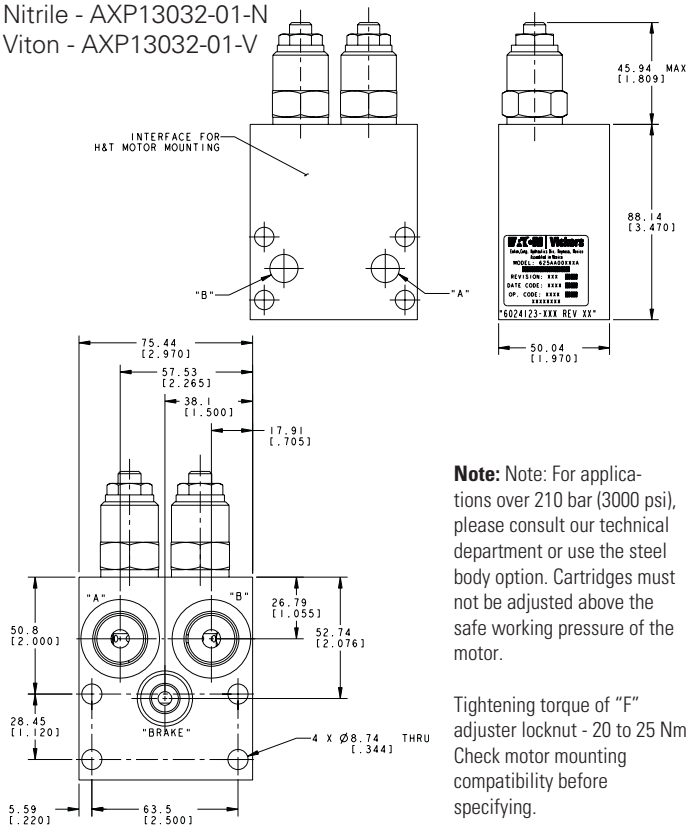

Note: Note: For applications over 210 bar (3000 psi), please consult our technical department or use the steel body option. Cartridges must not be adjusted above the safe working pressure of the motor.

Tightening torque of "F" adjuster locknut - 20 to 25 Nm
Check motor mounting compatibility before specifying.

Dual Cross-over Relief Package for H&T Series Motors

Cartridge valves & manifolds for spool valve motors

Dual Crossover Relief Valve Assembly

This valve assembly provides motor over-pressure protection in both directions of rotation, while supplying the return or lower pressure side of the motor with makeup oil. If closed center valving is used, an additional function is controlled braking.

Typical applications are vehicle propulsion and motor work circuits in which pressure limiting is required.

How to Order

Complete pre-assembled packages are specified using the RV3A-10 model code. Option "A" must be selected for the cage seals, position 6 of the model code is "H". To order the manifold separately, without the two RV3A cartridges, order the part number 4997062-001.

RATINGS AND SPECIFICATIONS

Rated flow	76 L/min(20USgpm)
Rated pressure	210 bar (3000psi)
Internal leakage (maximum)	less than 5 drops/min @ 85% of nominal setting
Manifold sub-assembly only	4997062-001
Installation kit (includes cap screws, washers and o-rings)	4997242-001

For detailed specifications refer to the RV3A-10 data sheet

Dimensions

mm (inch)

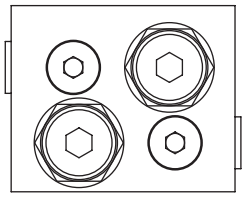

Port Sizes

"A", "B" – SAE10

"Brake" – SAE4

Functional Symbol

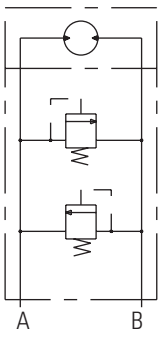

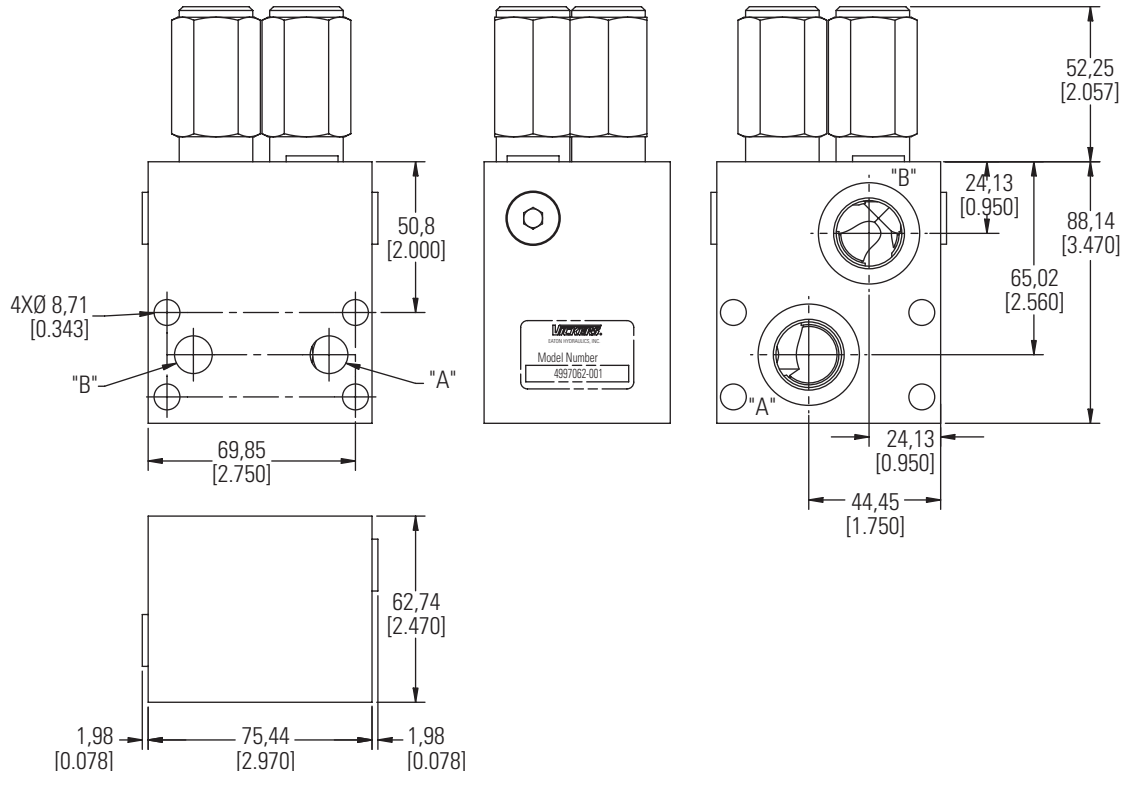

1CE2K95/1CEE2K95 - Motor Mounted Valves

2K Mounting Pattern Single and Dual Overcenter Valves

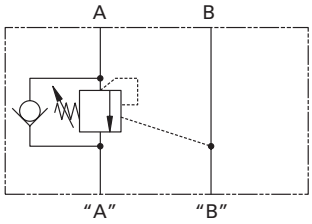

1CE2K95*A

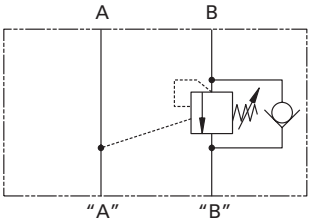

1CE2K95*B

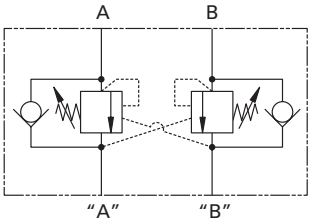

1CEE2K95

Description

Overcenter valves give static and dynamic control of loads by regulating the flow into and out of hydraulic actuators. When installed close to or within an actuator, the overcenter valve will stop runaway in the event of hose burst and if open center directional control valves are used, will allow thermal expansion relief of the hydraulic fluid.

The overcenter cartridge is ideal for mounting directly into a cavity machined in the body of the cylinder, motor or rotary actuator. The cartridge can also be mounted directly to the ports via a specifically machined body as part of a Hydraulic Integrated Circuit or single unit, or contained within one of our standard line bodies.

Single overcenter valves are normally used when the load is unidirectional, for example an aerial platform or crane and dual overcenter valves are used for controlling loads in both directional for motor applications or for cylinders going over center.

Operation

The check section allows free flow into the actuator then holds and locks the load against movement. The pilot assisted relief valve section will give controlled movement when pilot pressure is applied. The relief section is normally set to open at a pressure at least 1.3 times the maximum load induced pressure but the pressure required to open the valve and allow movement depends on the pilot ratio of the valve. For optimization of load control and energy usage, a choice of pilot ratios is available.

The pressure required to open the valve and start actuator movement can be calculated as follows:

$$\text{Pilot Pressure} = \frac{\text{(Relief Setting) - (Load Pressure)}}{\text{Pilot Ratio}}$$

Pilot Ratios

4:1 Best suited for applications where load varies and machine structure can induce instability

8:1 Best suited for applications where the load remains relatively constant.

Other ratios available upon request

Performance Data

Ratings and Specifications

Figures based on: Oil Temp = 40°C Viscosity = 32 cSt (150 SUS)		
Rated flow		90 L/min (23 USgpm)
Max setting		Max load induced Pressure: 270 bar (4000 psi) Relief setting: 350 bar (5000 psi)
Cartridge material		Working parts hardened & ground steel External surface zinc plated
Body material		Standard aluminium (up to 210 bar*) Steel (up to 350 bar)
Mounting position		Unrestricted
Cavity Number		A12336 (See section M)
Torque cartridge into cavity		60 Nm (44 ibs ft)
Weight (inc cartridges)		1CE2K95 2.16 kg (4.75 lbs) 1CEE2K95 2.26 kg (4.97 lbs)
Seal kit number	1CE2K95	9900830-000 (Buna-N) 9900831-000 (Viton)
	1CEE2K95	9900832-000 (Buna-N) 9900833-000 (Viton)
Recommended filtration level		BS5540/4 Class 18/13 (25 micron nominal)
Operating Temp		-30°C to +90°C (-22° to 194°F)
Leakage		0.3 milliL/min nominal (5 dpm)
Nominal viscosity range		5 to 500 cSt
Installation Kit (includes cap screws, washers, and o-rings)		9900826-000 (Buna-N) 9900827-000 (Viton)

1CE2K95/1CEE2K95 Motor Mounted Valves

2K Mounting Pattern Single and Dual Overcenter Valves

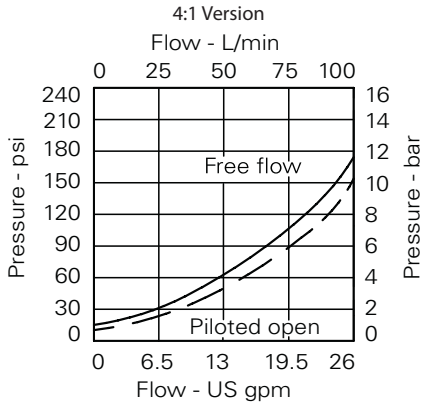

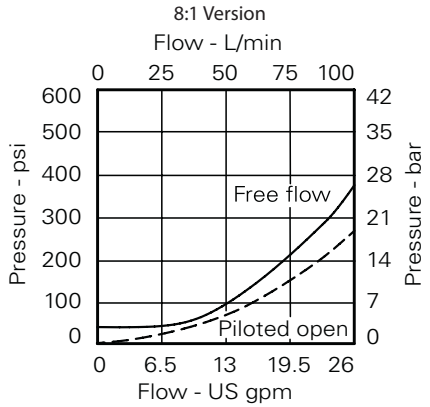

1CEE2K95 - F - A 10H - AG - 35 0 - 35 0 - S - 5

1 2 3 4 5 6 7 8 9 10 11

1 Basic Code

1CEE2K95 Double Cartridge and Body
1CE2K95*A Single overcenter in line A-"A"
1CE2K95*B Single overcenter in line B-"B"

2 Adjustment Means

F – Screw Adjustment

3 Housing Material

A – Aluminum
S – Steel

4

Code	Port Size "A" & "B"	Dual Housing Number Aluminum	Steel
4W	1/2" BSP	6025185-001	6025185-003
10H	SAE 10	6025185-002	
10T	SAE 10		6025185-004

5 Port Acted Upon

A – A Port
B – B Port
AB – A & B Ports (dual)

6 Pressure Range (Cart A)

Note: Code Based on pressure in bar.

20 – 70-225 bar. Std setting 100 bar.
35 – 200-350 bar. Std setting 210 bar.

7 Pressure Setting (Cart A)

0 – Std factory setting
1500 – 1500 psi

8 Pressure Range (Cart B)

Note: Code Based on pressure in bar.

20 – 70-225 bar. Std setting 100 bar.
35 – 200-350 bar. Std setting 210 bar.

9 Pressure Setting (Cart B)

0 – Std factory setting
1500 – 1500 psi

10 Seals

S – Buna-N
SV – Viton

11 Pilot Ratio

4 – 4:1
8 – 8:1

Cavity plug part number

Nitrile - AXP14434-02-N
Viton - AXP14434-02-V

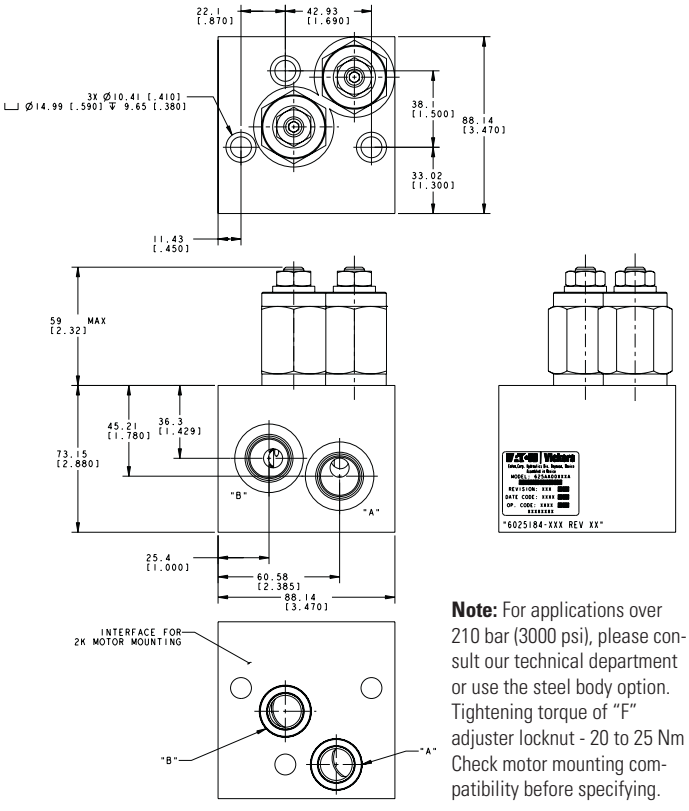

Note: For applications over 210 bar (3000 psi), please consult our technical department or use the steel body option. Tightening torque of "F" adjuster locknut - 20 to 25 Nm Check motor mounting compatibility before specifying.

1CESH2K95/1CEESH2K95 - Motor Mounted Valves

2K Mounting Pattern Single and Dual Overcenter Valves with Brake Release Shuttle

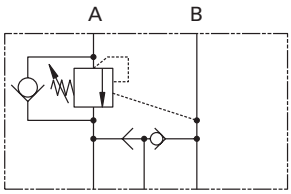

"A" Brake "B"

1CESH2K95*A

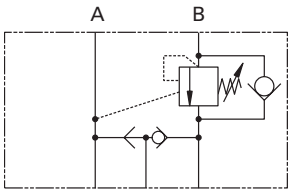

"A" Brake "B"

1CESH2K95*B

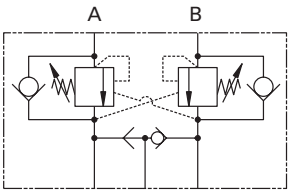

"A" Brake "B"

1CEESH2K95

Description

Overcenter Valves give static and dynamic control of loads by regulating the flow into and out of hydraulic actuators. When installed close to or within an actuator, the overcenter valve will stop runaway in the event of hose burst and if open center directional control valves are used, will allow thermal expansion relief of the hydraulic fluid.

These dual overcenter valves also contain a brake release shuttle valve which ensures that pressure is applied to a brake release circuit regardless of whether pressure is applied to ports "A" or "B". These multifunction valves are normally used for the static and dynamic control of systems using motors or semi-rotary actuators.

Operation

The check section allows free flow into the actuator then holds and locks the load against movement. The pilot assisted relief valve section will give controlled movement when pilot pressure is applied. The relief section is normally set to open at a pressure at least 1.3 times the maximum load induced pressure but the pressure required to open the valve and allow movement depends on the pilot ratio of the valve. For optimization of load control and energy usage, a choice of pilot ratios is available.

The pressure required to open the valve and start actuator movement can be calculated as follows:

$$\text{Pilot Pressure} = \frac{\text{(Relief Setting) - (Load Pressure)}}{\text{Pilot Ratio}}$$

Pilot Ratios

4:1 Best suited for applications where load varies and machine structure can induce instability

8:1 Best suited for applications where the load remains relatively constant.

Other ratios available upon request

Performance Data

Ratings and Specifications

Figures based on: Oil Temp = 40°C Viscosity = 32 cSt (150 SUS)			
Rated flow			90 L/min (23 USgpm)
Max setting		Max load induced Pressure:	270 bar (4000 psi)
		Relief setting:	350 bar (5000 psi)
Cartridge material			Working parts hardened & ground steel External surface zinc plated
Body material			Standard aluminium (up to 210 bar*) Steel (up to 350 bar)
Mounting position			Unrestricted
Cavity Number			A12336 (See section M)
Torque cartridge into cavity			60 Nm (44 ibs ft)
Weight (inc cartridges)		1CESH2K95	2.32 kg (5.10 lbs)
		1CEESH2K95	2.42 kg (5.32 lbs)
Seal kit number	1CESH2K95	9900834-000 (Buna-N)	9900835-000 (Viton)
	1CEESHT35	9900836-000 (Buna-N)	9900837-000 (Viton)
Recommended filtration level			BS5540/4 Class 18/13 (25 micron nominal)
Operating Temp			-30°C to +90°C (-22° to 194°F)
Leakage			0.3 milliL/min nominal (5 dpm)
Nominal viscosity range			5 to 500 cSt
Installation Kit (includes cap screws, washers, and o-rings)			9900828-000 (Buna-N) 9900829-000 (Viton)

1CESH2K95/1CEESH2K95 - Motor Mounted Valves

2K Mounting Pattern Single and Dual Overcenter Valves with Brake Release Shuttle

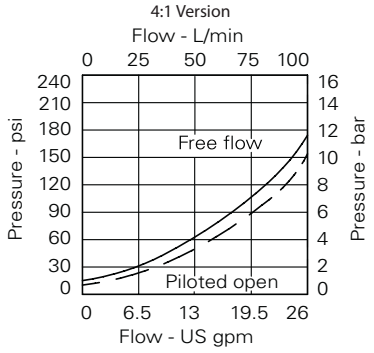

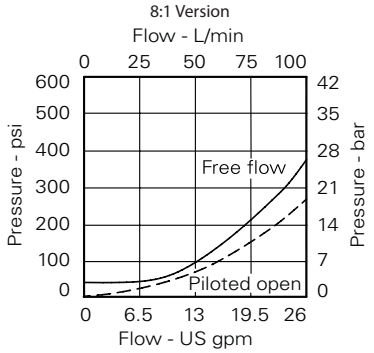

1CEESH2K95 - F - A 10H - AG - 35 0 - 35 0 - S - 5

1 2 3 4 5 6 7 8 9 10 11

1 Basic Code

1CEESH2K95 - Double Cartridge and Body
1CESH2K95*A - Single overcenter in line A-"A"
1CESH2K95*B - Single overcenter in line B-"B"

2 Adjustment Means

F – Screw Adjustment

3 Housing Material

A – Aluminum
S – Steel

4

Code	Port Size "A" & "B"	Brake	Dual Housing Number Aluminum	Steel
4W	1/2" BSP	1/4" BSP	6025134-001	6025134-003
10H	SAE 10	SAE 4	6025134-003	
10T	SAE 10	SAE 4		6025134-004

5 Port Acted Upon

A – A Port
B – B Port
AB – A & B Ports (dual)

6 Pressure Range (Cart A)

Note: Code Based on pressure in bar.

20 – 70-225 bar. Std setting 100 bar.
35 – 200-350 bar. Std setting 210 bar.

7 Pressure Setting (Cart A)

0 – Std factory setting
1500 – 1500 psi

8 Pressure Range (Cart B)

Note: Code Based on pressure in bar.

20 – 70-225 bar. Std setting 100 bar.

35 – 200-350 bar. Std setting 210 bar.

9 Pressure Setting (Cart B)

0 – Std factory setting
1500 – 1500 psi

10 Seals

S – Buna-N
SV – VitoN

11 Pilot Ratio

4 – 4:1
8 – 8:1

Cavity plug part number

Nitrile - AXP13032-01-N
Viton - AXP13032-01-V

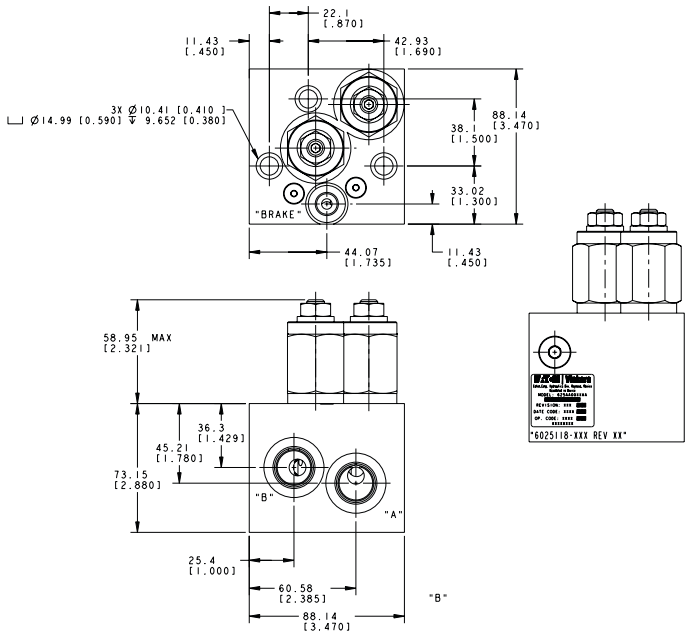

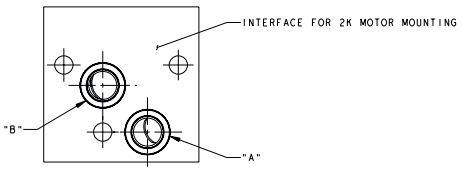

Note: For applications over 210 bar (3000 psi), please consult our technical department or use the steel body option. Tightening torque of "F" adjuster locknut - 20 to 25 Nm Check motor mounting compatibility before specifying.

Dual Cross-over Relief Package for 2000 Series Disc Valve Motors

Cartridge valves & manifolds for disc valve motors

Dual Crossover Relief Valve Assembly

This valve assembly provides motor over-pressure protection in both directions of rotation, while supplying the return or lower pressure side of the motor with makeup oil. If closed center valving is used, an additional function is controlled braking.

Typical applications are vehicle propulsion and motor work circuits in which pressure limiting is required.

How to Order

Complete pre-assembled packages are specified using the RV3A-10 model code. Option "A" must be selected for the cage seals, position 6 of the model code is "2K". To order the manifold separately, without the two RV3A cartridges, order 4997060-001

RATINGS AND SPECIFICATIONS

Rated flow	76 L/min(20USgpm)
Rated pressure	210 bar (3000psi)
Internal leakage (maximum)	less than 5 drops/min @ 85% of nominal setting
Manifold sub-assembly only	4997060-001
Installation kit (includes cap screws, washers and o-rings)	02-372492

For detailed specifications refer to the RV3A-10 data sheet.

Dimensions

mm (inch)

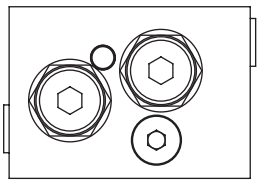

Port Sizes

"A", "B" – SAE10

"Brake" – SAE4

Warning

This manifold package may not be suitable for application with all 2000 series motors - please check installation dimensions carefully.

Functional Symbol

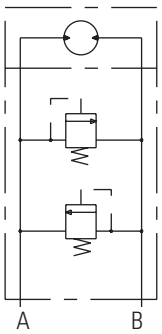

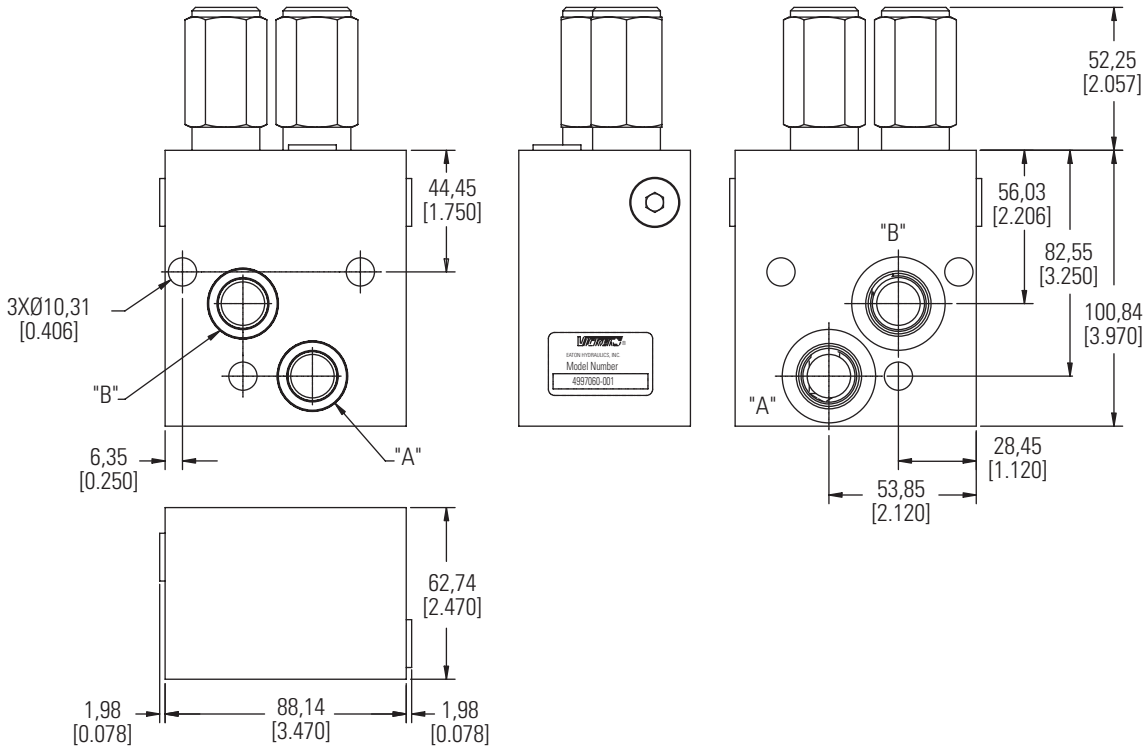

ATEX Certification

This option is available on H,S,T, 2000 series, 4000 series,4000 Compact series, 6000 series, 10,000 series, VIS 40, VIS 45 and HP 30 Motors



What is ATEX Certification?

ATEX certification is a certification that allows our motors to be used in certain types of explosive environments. It derives its name from the French title of the European Union ATEX directive - **AT**mosphères**EX**plosives.

Benefits

ATEX certification on our motors allows our motors to be used in certain types of explosive environments. When you order an ATEX certified motor, you receive:

- An ATEX certified motor that has the ATEX marking on the label.
- An operating instructions manual
- EC Declaration of Conformity (ATEX Certificate)

Applications

As mentioned above, it can be any application that operates in explosive environments. Typically, this includes Oil and Gas applications, Mining applications and applications in the rubber industry.

How to configure an ATEX certified Motor in the model code?

To specify an ATEX certified motor, you will need to select the 'EX' option from the Special features (Hardware) section of the model code for the above motors.

Fluids Recommendations

Product Line	Viscosity Minimum	Viscosity Best Range	ISO Cleanliness Requirements
J-2, S, W, T Series	70 SUS 13 cst	100-200 SUS 20-43 cst	20/18/13
H Series	100 SUS 20 cst	100-200 SUS 20-43 cst	20/18/13
Disc Values Series	70 SUS 13 cst	100-200 SUS 20-43 cst	20/18/13
VIS Series	70 SUS 13 cst	100-200 SUS 20-43 cst	20/18/13

Introduction

Hydraulic fluids are one of the vital components of hydraulic system. Proper selection of oil assures satisfactory life and operation of system components. The purpose of this section is to provide readers with the knowledge required to select the appropriate fluids for use in systems that employ Eaton hydraulic components.

Viscosity and Temperature

Viscosity is the measure of a fluid's resistance to flow. The most important characteristic to consider when choosing a fluid to be used in a hydraulic system is viscosity. The fluid must be thin enough to flow easily but thick enough to maintain adequate lubricating film between component and to maintain proper sealing at the operating temperatures of the hydraulic system. For viscosity requirements see table. Viscosity of any fluid is relative to temperature, as the fluid warms the viscosity decreases and vice versa. When choosing a fluid,, it is important to consider the start-up and operating temperatures of the hydraulic system. A high VI fluid shows relatively small change of viscosity with temperature. Lubricants used for hydraulic applications may contain viscosity index improvers (VII). They refer to these fluids as viscosity index improved, or multi-viscosity fluids. The viscosity of these fluids may drop down in use due to the shearing of VI improvers used in the formulations. Anti-wear hydraulic oils containing polymeric thickeners (Viscosity Index Improvers [VII]) are generally used for wide band operating temperature applications. These fluids experience temporary and permanent viscosity loss during use in hydraulic system. Check the extent of viscosity loss (shear stability) to avoid hydraulic service below the recommended minimum viscosity. Oil with good shear stability is recommended for wide band temperature applications. Multi-grade engine oils, ATFs, UTTOs, etc., also contain VIIs, and viscosity loss will be encountered during use.

Cleanliness

Cleanliness of the fluid in a hydraulic system is extremely important. More than 70% of all failures are caused by contamination. Eaton recommends that the fluids used in its hydraulic components be maintained per ISO 4406. Cleanliness level requirements varies with the hydraulic components. The cleanliness of a hydraulic system is dictated by the cleanliness requirement of the most stringent component in the system. Cleanliness requirements for specific products are given in the table. OEMs and distributors who use Eaton hydraulic components in their products should provide for these requirements in their design. A reputable filter supplier can supply filter information.

Fluid Maintenance

The condition of a fluid has a direct effect on the performance and reliability of the system. Maintaining proper fluid viscosity, cleanliness level, water content, and additive level is essential for excellent hydraulic system performance. Routine fluid condition monitoring is recommended.

Fluid Selection

Premium grade anti-wear (AW) petroleum based hydraulic fluids will provide the best performance in Eaton hydraulic components. Lubricants that pass Eaton Vickers® 35VQ25A high-pressure vane pump test (Eaton ATS-373 test procedure, ASTM Specification D-6973) are considered good quality, anti-wear hydraulic fluids. Automotive crankcase oils with American Petroleum Institute (API) letter designation SE, SF, SG, SH, or higher per SAE J183 classes of oils are recommended for applications using Eaton GG motors. Automotive crankcase oils generally exhibit less shear stability compared to industrial anti-wear hydraulic fluids, which can result in higher loss of viscosity during service life. Other mineral oil-based lubricants commonly used in hydraulic systems are automatic transmission fluids (ATFs) and universal tractor transmission oils (UTTOs). Synthetic hydrocarbon base stocks, such as polyalphaolefins (PAOs), are also used to formulate hydraulic fluids, engine oils, ATFs and UTTOs. Alternative fluids are recommended when specific properties, such as fire resistance, biodegradability, etc., are necessary for the application. Keep in mind that alternative fluids may differ from AW petroleum fluids in properties such as pressure viscosity coefficient, specific gravity, lubricity, etc. Hence, GG motors may need to be derated, some can be operated under full ratings, and other are not rated.

Additional Notes:

When choosing a hydraulic fluid, all the components in the system must be considered. Viscosity limitations has to meet the most stringent components requirements. For any system where the fluid is non petroleum oil, set the target one ISO range code cleaner for each particle size, than that of petroleum fluids. Keep adequate fluid level in the reservoir. Take fluid level reading when the system is cold. For more details, refer to Eaton Fluid Recommendation Document # 03-401-2010

Contact your Eaton representative if you have specific questions about the fluid requirements of Eaton hydraulic components.

Notes



Spool Valve motors incorporate the proven orbit motor principle to provide high torque at low speeds.

Spool Valve Motors

Highlights

Product Description

Char-Lynn spool valve motors distribute pressurized fluid into and out of the Orbit gear set (Gerotor or Geroler) via valve slots integrated into the output shaft. The spool valve motors incorporate both valving and hydrodynamic journal bearings into a common shaft design. The valve section (spool valve) can be optimized for low flow, low speed needs using a low speed spool option to enhance smooth running performance.

These motors incorporate the proven orbit motor principle to provide high torque at low speeds.

Motor shaft rotation can be instantly reversed by changing direction of input/output flow while generating equal torque in either direction. The displacements available provide a wide variety of speeds and torques from any spool valve motor series.

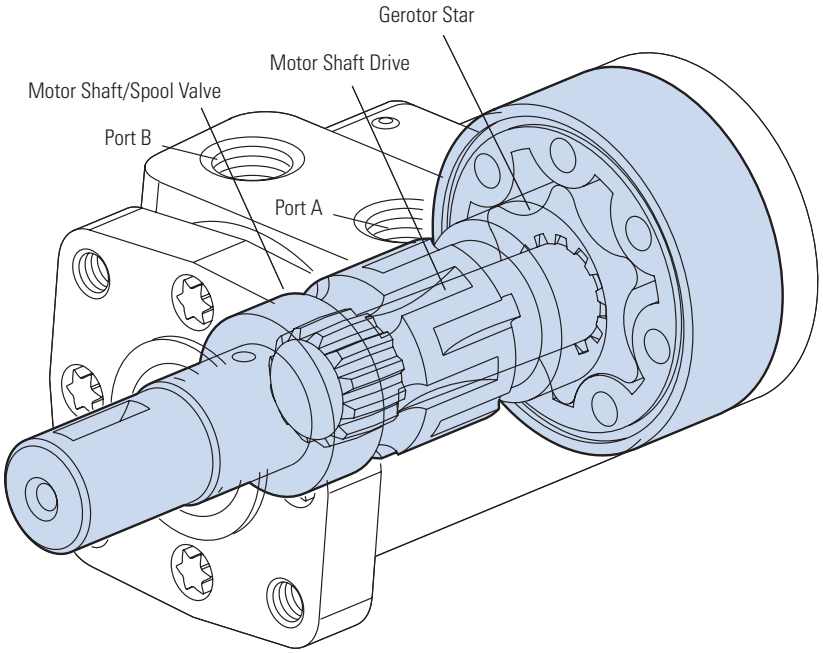

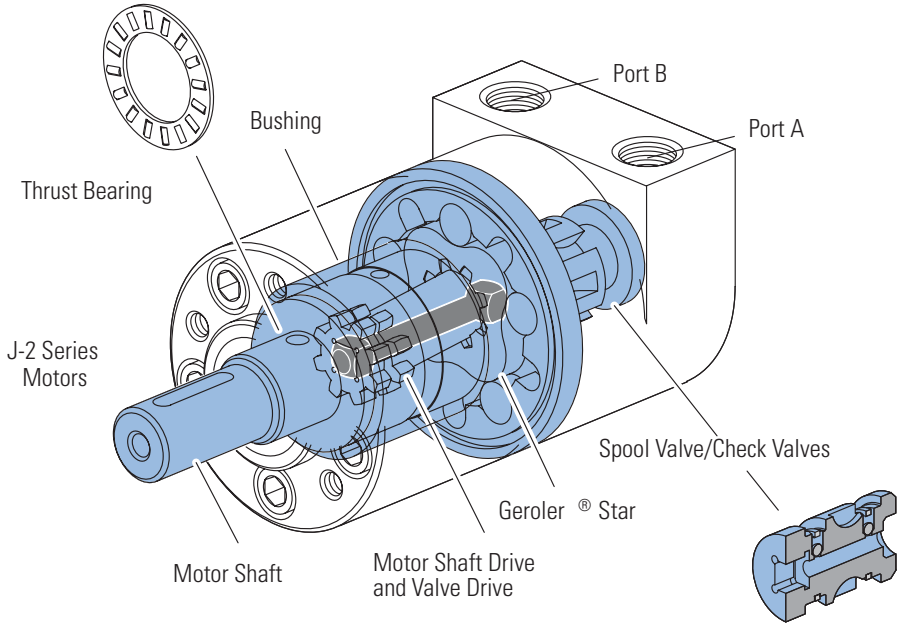

Features, Benefits, and Applications

Features

- Proven Orbit Motor Principle
- Hydrodynamic Journal Bearings
- Constant Clearance Geroler
- Three-Zone Pressure Design
- Reduced drive running-angle
- High-pressure seals
- Modular design

Benefits

- Compact, powerful package
- Infinite bearing life (at rated loads)
- High efficiency
- Increases shaft seal & bearing life
- Smooth operation, increases drive life
- Reduces leakage
- Design flexibility
- Economically tailored solutions

Applications

- Harvesters
- Augers
- Spreaders
- Machine tools
- Conveyors
- Winches
- Turf care equipment
- Food processing
- Aerial Work Platforms
- Anywhere a compact drive with high output torque is needed

Design Features

Spool valve technology is typically used where compact, economical solutions are most needed. Spool valve motors use a spool valve to precisely time and control flow through the orbit gear set (Gerotor or Geroler). Inlet flow is directed into and out of the orbit set via slots in the spool and passages through the motor housing. The result is a very cost-effective compact package suited to many application requirements. The three primary components in the motor are the orbit star, drive and output shaft. H, S and T Series incorporate the spool valve and hydrodynamic bearings in the motor shaft. The W series is similar except a ball bearing is used for the front bearing for increased side-load capacity. Due to its compact size and high speed capability, the J Series is unique and utilizes a separate dedicated spool and spool valve drive. All motors utilize Eaton's constant-clearance Geroler technology except the H Series, which continues to use the time-proven H motor gerotor set. These motors all use a three-zone pressure design consisting of three unique pressure areas: 1) inlet, 2) return, 3) case. This provides the capability to limit motor case pressure and allows the use of several case pressure options for extended shaft seal and thrust bearing life.

Below is a quick-guide to help select the proper motor for your application:

MOTOR QUICK-GUIDE (BASED ON MAXIMUM CONTINUOUS RATINGS)

Series	Output Torque Nm [lb-in]	Pressure bar [psi]	Flow lpm [gpm]	Side Load kg [lbs]
J Series	62 [550]	140 [2030]	21 [5.5]	196 [430]
H Series	407 [3607]	124 [1800]	57 [15]	635 [1400]
S Series	430 [3800]	135 [2000]	55 [15]	635 [1400]
T Series	450 [4000]	155 [2250]	55 [15]	635 [1400]
W Series	410 [3625]	165 [2400]	68 [18]	845 [1900]

* The above are provided as guidelines only. Actual ratings vary depending on final motor configuration

Table of Contents

Highlights	B-ii
Features, Benefits, and Applications	B-iii

J Series (129-)

Highlights	B-1-1
Specifications	B-1-2
Performance Data	B-1-3
Dimensions	B-1-5
Product Numbers	B-1-9
Shaft Side Load Capacity	B-1-10
Case Pressure and Case Drain	B-1-11
Model Code	B-1-12

H Series (101-)

Highlights	B-2-1
Specifications	B-2-2
Performance Data	B-2-3
Dimensions	B-2-9
Product Numbers	B-2-10
Model Code	B-2-11

S Series (103-)

Highlights	B-3-1
Specifications	B-3-2
Performance Data	B-3-3
Dimensions	B-3-8
Product Numbers	B-3-9
S Series with Low Speed Valving	B-3-10
Model Code	B-3-11

T Series (158-)

Highlights	B-4-1
Specifications	B-4-2
Performance Data	B-4-3
Dimensions	B-4-8
Product Numbers	B-4-9
Model Code	B-4-10

T Series with Parking Brake (185-)

Highlights	B-4-11
Application Information	B-4-12
Specifications	B-4-13
Dimensions	B-4-14
Brake Release and Motor Case Pressure	B-4-15
Product Numbers	B-4-16
Model Code	B-4-17

H, S and T Series (101-, 103-, 158-, 185-)

Side Load Capacity	B-4-18
Dimensions	B-4-19
Mounting Options	B-4-21

W Series (162-)

Highlights	B-5-1
Specifications	B-5-2
Performance Data	B-5-3
Dimensions	B-5-5
Dimensions Shafts	B-5-6
Shaft Side Load Capacity	B-5-7
Model Code	B-5-8

W Series with Parking Brake (162-)

Dimensions	B-5-9
Product Numbers	B-5-10
Model Code	B-5-11

J Series (129-)

Highlights

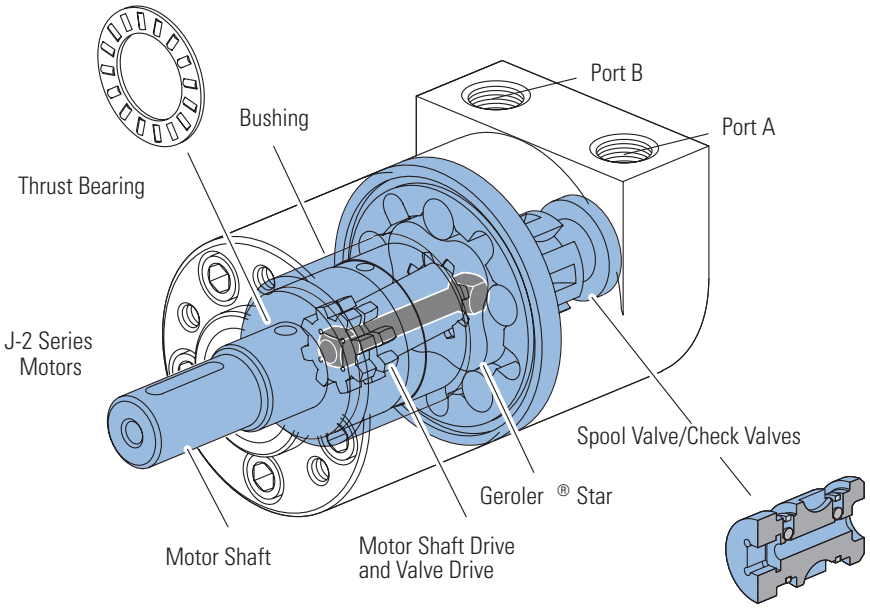

Description

Char-Lynn J Series motors provide a lot of power from a very small package. Up to 5 kW [6 1/2 HP] of power. These motors are 61 mm [2.4 in] in diameter and 104 to 130 mm [4.1 to 5.1 in] in length.

The J Series motor shaft and seal allows high case pressure up to 76 bar [1100 PSI] return line pressure without case drain line. When a case drain line is used a 220 bar [3190 PSI] peak pressure is allowed in the return line.

Specifications

Geroler Element	5 Displacements
Flow l/min [GPM]	21 [5.5] Continuous***
	25 [6.5] Intermittent**
Speed	Up to 1992 RPM Cont.
	Up to 2458 RPM Inter.
Pressure bar [PSI]	140 [2030] Cont.***
	165 [2400] Inter.**
Torque Nm [lb-in]	62 [549] Cont.***
	84 [743] Inter.**

*** Continuous— (Cont.) Continuous rating, motor may be run continuously at these ratings.
** Intermittent— (Inter.) Intermittent operation, 10% of every minute.

Features:

- Constant clearance Geroler set
- Integrated check valves
- Self-lubricating shaft bushing
- High-strength rigid components
- Increased valve seal lands
- High pressure seals
- Variety of displacements, shafts, mounts and special options

Benefits:

- High efficiency
- Extended leak-free performance
- Powerful compact package
- Design flexibility

Applications:

- Agricultural augers, harvesters, seeders
- Car wash tire spray wands and brushes
- Marine bow thrusters
- Food processing
- Railroad maintenance equipment
- Machine tools
- Conveyors
- Snow blower chute rotator
- Industrial sweepers and floor polishers
- Saw mill works
- Turf equipment reel drives
- Paint stripper
- Many more


Plastic Injection


Metal Forming


Food Processing


Ship-Boat Building

J Series (129-)

Specifications

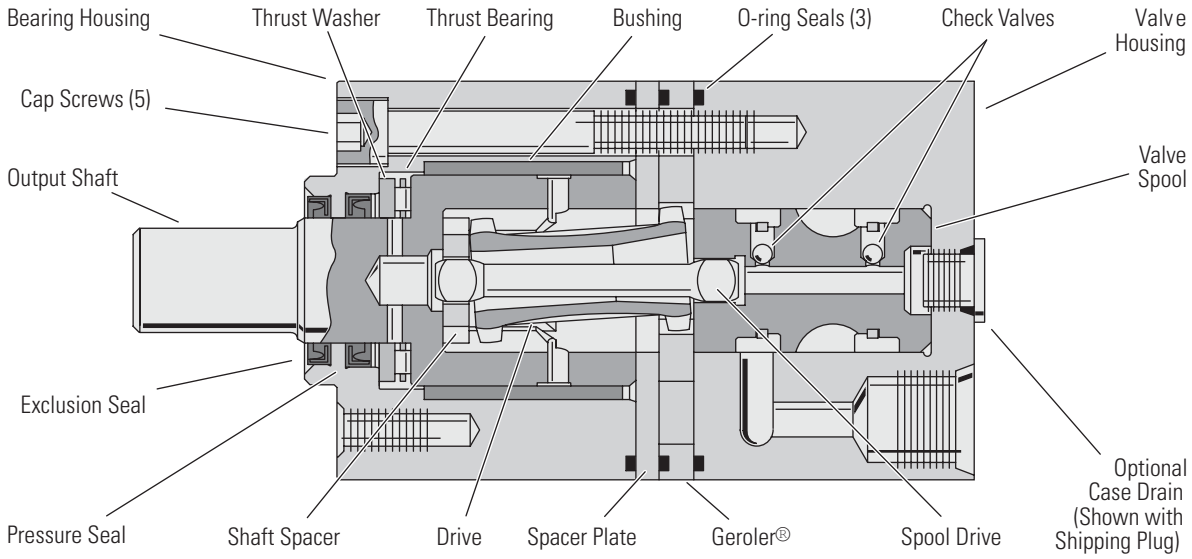

SPECIFICATION DATA — J MOTORS

Displ. cm^3/r [in^3/r]		8,2 [.50]	12,9 [.79]	19,8 [1.21]	31,6 [1.93]	50,0 [3.00]
Max. Speed (RPM) @ Continuous Flow		1992	1575	1043	650	393
Flow l/min [GPM]	Continuous	17 [4.5]	21 [5.5]	21 [5.5]	21 [5.5]	21 [5.5]
	Intermittent	21 [5.5]	25 [6.5]	25 [6.5]	25 [6.5]	25 [6.5]
Torque Nm [lb-in]	Continuous	16 [141]	25 [225]	38 [333]	50 [446]	62 [549]
	Intermittent	19 [164]	30 [263]	46 [405]	62 [546]	84 [743]
	Peak	22 [193]	36 [321]	48 [425]	83 [733]	86 [765]
Pressure	Continuous	140 [2030]	140 [2030]	140 [2030]	121 [1750]	97 [1400]
Δ bar [Δ PSI]	Intermittent	165 [2400]	165 [2400]	165 [2400]	150 [2175]	140 [2030]
	Peak	220 [3190]	220 [3190]	220 [3190]	190 [2756]	150 [2175]
Weight kg [lbs]		2 [4.4]	2,1 [4.6]	2,2 [4.8]	2,3 [5.0]	2,4 [5.4]

* Maximum pressure at motor inlet port is 220 Bar [3190 PSI] without regard to Δ bar [Δ PSI] and/or back pressure ratings or combination thereof.

Note:

To assure best motor life, run motor for approximately one hour at 30% of rated pressure before application to full load. Be sure motor is filled with fluid prior to any load applications.

Δ Pressure:

The true Δ bar [Δ PSI] difference between inlet port and outlet port.

See individual shafts for maximum torque recommendation. Splined shafts are recommended for those applications subject to frequent reversals.

Continuous Rating:

Motor may be run continuously at these ratings

Intermittent Operation:

10% of every minute

Peak Operation:

1% of every minute

Recommended Fluids:

Premium quality, anti-wear type hydraulic oil with a viscosity of not less than 70 SUS at operating temperature.

Recommended System Operating Temp.:

-34°C to 82°C
[-30°F to 180°F]

Recommended Filtration:

per ISO Cleanliness Code 4406, level 20/18/13

J Series (129-)

Performance Data

Motors run with high efficiency in all areas designated with a number for torque and speed. For best motor life select a motor to run with a torque and speed range shown in the light shaded area.

Performance data is typical at 120 SUS. Actual data may vary slightly from motor to motor in production.

8,2 cm^3/r [.50 in^3/r]

Flow LPM [GPM]	D Pressure Bar [PSI] Continuous [200] 14	[400] 28	[500] 34	[600] 41	[700] 48	[800] 55	[1000] 69	[1400] 97	[1500] 103	[2000] 138	[2030] 140	Max. Continuous [2400] 165	Max. Intermittent
[1] 3,8	[11] 1 456	[25] 3 444	[33] 4 437	[40] 5 429	[47] 5 422	[55] 6 412	[69] 8 394	[96] 11 347	[102] 12 332	[130] 15 250	[132] 15 239	[146] 16 170	
[2] 7,6	[9] 1 897	[24] 3 886	[31] 4 877	[38] 4 867	[46] 5 860	[53] 6 847	[68] 8 823	[97] 11 768	[105] 12 749	[139] 16 657	[141] 16 647	[163] 18 557	
[3] 11,4	[6] 1 1349	[20] 2 1331	[28] 3 1318	[35] 4 1309	[44] 5 1296	[51] 6 1285	[65] 7 1261	[94] 11 1198	[102] 12 1176	[137] 15 1070	[139] 16 1060	[164] 19 959	
[4.25] 16,0		[16] 2 1902	[23] 3 1885	[30] 3 1873	[36] 4 1858	[44] 5 1846	[60] 7 1817	[90] 10 1750	[97] 11 1721	[133] 15 1599	[135] 15 1585	[160] 18 1475	
Max. Continuous [4.5] 17,0		[16] 2 1992	[23] 3 1979	[29] 3 1964	[36] 4 1947	[43] 5 1929	[59] 7 1900	[89] 10 1833	[96] 11 1808	[131] 15 1684	[134] 15 1673	[160] 18 1553	
Max. Intermittent [5.5] 20,8		[12] 1 2458	[18] 2 2437	[26] 3 2420	[33] 4 2405	[40] 5 2387	[54] 6 2353	[83] 9 2272	[92] 10 2255	[124] 14 2134	[129] 15 2115	[154] 17 1994	

Continuous

Intermittent

12,9 cm^3/r [0.79 in^3/r]

Flow LPM [GPM]	D Pressure Bar [PSI] Continuous [200] 14	[400] 28	[500] 34	[600] 41	[700] 48	[800] 55	[1000] 69	[1400] 97	[1450] 100	[1500] 103	[2000] 138	2030] 140	Max. Continuous [2400] 165	Max. Intermittent
[1] 3,8	[19] 2 290	[43] 5 285	[54] 6 281	[65] 7 277	[76] 9 273	[88] 10 268	[109] 12 260	[154] 17 237	[159] 18 234	[164] 19 230	[214] 24 194	[217] 25 189	[250] 28 151	
[2] 7,6	[16] 2 573	[39] 4 566	[51] 6 561	[63] 7 555	[74] 8 549	[86] 10 544	[109] 12 534	[155] 18 501	[160] 18 496	[165] 19 490	[221] 25 442	[225] 25 437	[263] 30 396	
[3] 11,4	[11] 1 859	[35] 4 849	[47] 5 843	[58] 7 838	[70] 8 832	[82] 9 825	[105] 12 810	[152] 17 777	[157] 18 771	[163] 18 763	[219] 25 708	[223] 25 701	[263] 30 652	
[4] 15,1	[6] 1 1153	[30] 3 1140	[41] 5 1135	[53] 6 1129	[64] 7 1124	[76] 9 1117	[99] 11 1101	[146] 16 1060	[152] 17 1051	[157] 18 1044	[214] 24 982	[217] 25 975	[260] 29 924	
Max. Continuous [5.5] 20,8		[19] 2 1575	[30] 3 1566	[42] 5 1556	[54] 6 1547	[65] 7 1539	[89] 10 1521	[136] 15 1473	[142] 16 1466	[148] 17 1457	[205] 23 1396	[209] 24 1387	[251] 28 1330	
Max. Intermittent [6.5] 24,6		[11] 1 1859	[23] 3 1851	[35] 4 1842	[46] 5 1831	[56] 6 1820	[81] 9 1804	[130] 15 1755	[135] 15 1743	[140] 16 1734	[198] 22 1670	[202] 23 1663	[243] 27 1599	

[42] 5 1556 } Torque [lb-in] Nm Speed RPM

J Series (129-)

Performance Data

Motors run with high efficiency in all areas designated with a number for torque and speed. For best motor life select a motor to run with a torque and speed range shown in the light shaded area.

Performance data is typical at 120 SUS. Actual data may vary slightly from motor to motor in production.

Continuous

Intermittent

19.8 cm³/r [1.21 in³/r]

Flow LPM [GPM]	D Pressure Bar [PSI] Continuous											Max. Continuous	Max. Intermittent
	[200] 14	[400] 28	[500] 34	[600] 41	[700] 48	[800] 55	[1000] 69	[1400] 97	[1450] 100	[1500] 103	[2000] 138	[2030] 140	[2400] 165
[1] 3,8	[32] 4 189	[67] 8 187	[85] 10 186	[102] 12 185	[119] 13 183	[136] 15 182	[170] 19 179	[236] 27 172	[244] 28 170	[253] 29 169	[321] 36 141	[325] 37 138	[374] 42 114
[2] 7,6	[30] 3 379	[65] 7 375	[83] 9 373	[101] 11 370	[119] 13 368	[136] 15 366	[172] 19 361	[223] 25 351	[248] 28 349	[257] 29 347	[328] 37 312	[333] 38 309	[388] 44 285
[3] 11,4	[21] 2 569	[57] 6 565	[75] 8 563	[93] 11 560	[111] 13 558	[128] 14 556	[163] 18 551	[231] 26 529	[240] 27 526	[248] 28 523	[325] 37 487	[330] 37 484	[405] 46 459
[4] 15,1	[12] 1 761	[47] 5 758	[65] 7 754	[83] 9 751	[101] 11 749	[119] 13 746	[154] 17 741	[221] 25 717	[230] 26 711	[239] 27 707	[316] 36 660	[320] 36 656	[382] 43 628
Max. Continuous [5.5] 20,8		[31] 4 1043	[49] 6 1040	[67] 8 1035	[84] 9 1033	[101] 11 1028	[137] 15 1021	[202] 23 997	[211] 24 993	[218] 25 990	[295] 33 938	[299] 34 934	[365] 41 899
Max. Intermittent [6.5] 24,6		[21] 2 1226	[38] 4 1222	[56] 6 1219	[74] 8 1215	[91] 10 1211	[126] 14 1204	[189] 21 1179	[196] 22 1174	[206] 23 1169	[278] 31 1121	[283] 32 1117	[347] 39 1079

31.6 cm³/r [1.93 in³/r]

Flow LPM [GPM]	D Pressure Bar [PSI] Continuous											Max. Continuous	Max. Intermittent
	[200] 14	[400] 28	[500] 34	[600] 41	[700] 48	[800] 55	[1000] 69	[1400] 97	[1450] 100	[1500] 103	[1750] 121	[2175] 150	
[1] 3,8	[51] 6 118	[106] 12 116	[133] 15 115	[160] 18 113	[187] 21 112	[213] 24 111	[265] 30 107	[362] 41 91	[372] 42 85	[383] 43 81	[439] 50 70		
[2] 7,6	[46] 5 236	[103] 12 234	[132] 15 232	[159] 18 230	[187] 21 228	[214] 24 225	[269] 30 221	[362] 41 187	[374] 42 179	[387] 44 175	[446] 50 165	[546] 62 145	
[3] 11,4	[36] 4 355	[94] 11 352	[122] 14 349	[149] 17 347	[177] 20 345	[205] 23 342	[259] 29 336	[351] 40 296	[364] 41 292	[377] 43 287	[440] 50 273	[542] 61 245	
[4] 15,1	[24] 3 474	[79] 9 472	[107] 12 469	[135] 15 466	[162] 18 462	[190] 21 460	[246] 28 452	[337] 38 404	[349] 39 397	[362] 41 393	[425] 48 373	[528] 60 346	
Max. Continuous [5.5] 20,8		[55] 6 650	[83] 9 647	[111] 13 645	[139] 16 640	[167] 19 636	[221] 25 629	[307] 35 584	[320] 36 580	[334] 38 575	[400] 45 550	[505] 57 513	
Max. Intermittent [6.5] 24,6		[35] 4 767	[64] 7 764	[93] 11 760	[121] 14 755	[150] 17 751	[204] 23 742	[279] 32 712	[294] 33 707	[308] 35 701	[378] 43 675	[485] 55 637	

50.0 cm³/r [3.00 in³/r]

Flow LPM [GPM]	D Pressure Bar [PSI] Continuous											Max. Continuous	Max. Intermittent
	[200] 14	[400] 28	[500] 34	[600] 41	[700] 48	[800] 55	[1000] 69	[1100] 76	[1200] 83	[1300] 90	[1400] 97	[2030] 140	
[1] 3,8	[82] 9 75	[167] 19 72	[211] 24 72										
[2] 7,6	[70] 8 149	[156] 18 147	[201] 23 145	[243] 28 144	[286] 32 143	[327] 37 142							
[3] 11,4	[53] 6 221	[140] 16 220	[184] 21 218	[227] 26 217	[271] 31 215	[311] 35 213	[396] 45 209	[441] 50 205	[484] 55 201	[521] 59 200	[549] 62 191		
[4] 15,1	[30] 3 296	[120] 14 292	[162] 18 289	[204] 23 286	[250] 28 284	[292] 33 282	[374] 42 273	[419] 47 270	[460] 52 265	[501] 57 263	[541] 61 259	[743] 84 213	
Max. Continuous [5.5] 20,8		[81] 9 393	[127] 14 392	[170] 19 389	[214] 24 387	[254] 29 383	[339] 38 377	[379] 43 372	[422] 48 369	[463] 52 364	[506] 57 358	[702] 79 302	
Max. Intermittent [6.5] 24,6		[47] 5 465	[90] 10 462	[133] 15 460	[176] 20 458	[219] 25 455	[307] 35 448	[345] 39 445	[385] 43 440	[429] 48 435	[467] 53 430	[685] 77 364	

[81] 9 393 } Torque [lb-in] Nm Speed RPM

J Series (129-)

Dimensions

Standard Rotation Viewed from Shaft End

Port A Pressurized — CW

Port B Pressurized — CCW

9/16 Inch End Port

9/16 -18 UNF - 2B O-Ring Ports, M14 x 1,5 - 6H O-Ring Ports — Metric Motor or G 1/4 (BSP) Ports (2 Ports each)

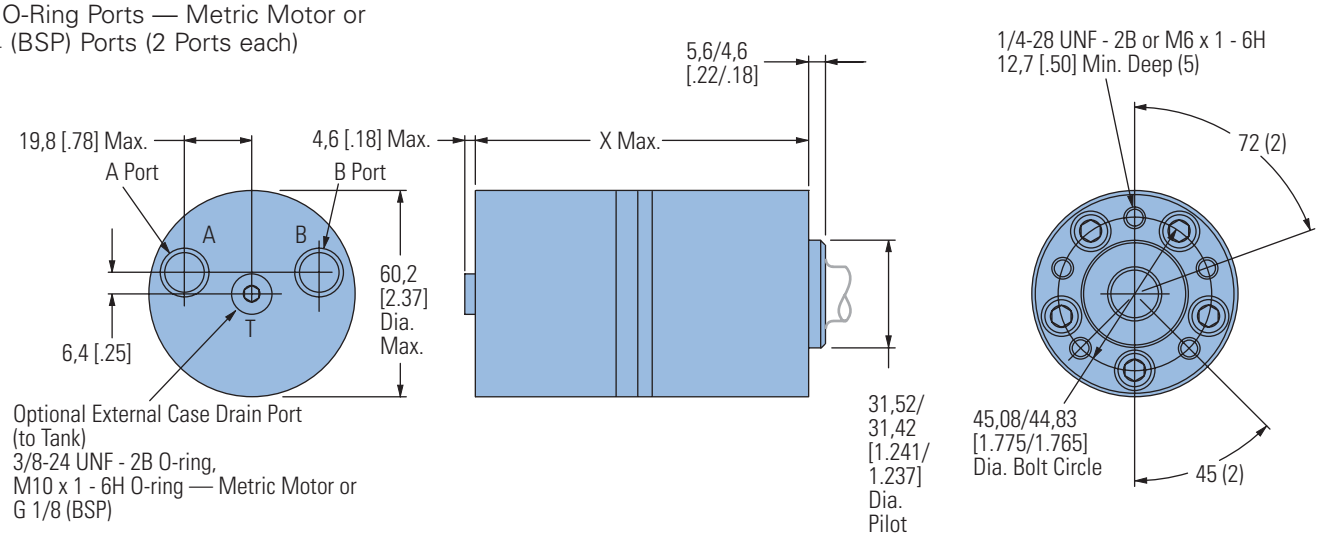

END PORT DIMENSIONS

Displacement cm³/r [in³/r]	X mm [inch]
8,2 [.50]	103,9 [4.09]
12,9 [.79]	106,9 [4.21]
19,8 [1.21]	112,5 [4.38]
31,6 [1.93]	118,9 [4.68]
50,0 [3.00]	130,3 [5.13]

3/8 Inch End Port

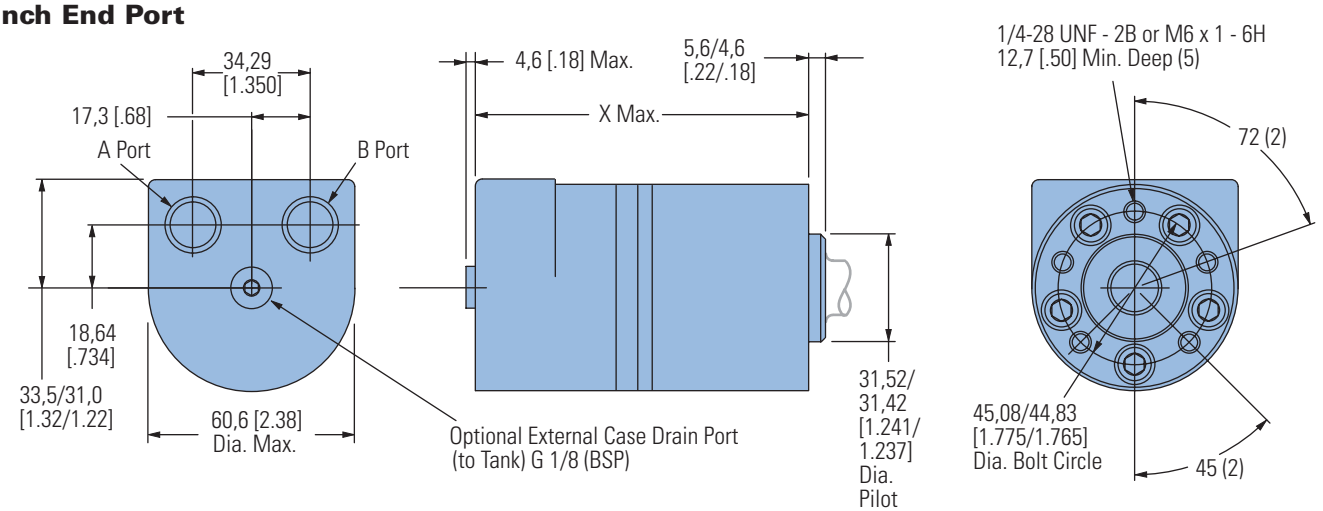

END PORT DIMENSIONS

Displacement cm³/r [in³/r]	X mm [inch]
8,2 [.50]	103,9 [4.09]
12,9 [.79]	106,9 [4.21]
19,8 [1.21]	112,5 [4.38]
31,6 [1.93]	118,9 [4.68]
50,0 [3.00]	130,0 [5.12]
160,5 [6.32]	132,3 [5.21]

J Series (129-)

Dimensions

Ports

9/16 -18 UNF - 2B O-Ring Ports,
M14 x 1,5 -6H O-Ring Ports — Metric Motor,
G 3/8 or G 1/4 (BSP) Ports (2)

Standard Rotation Viewed from Shaft End

Port A Pressurized — CW
Port B Pressurized — CCW

Side Port

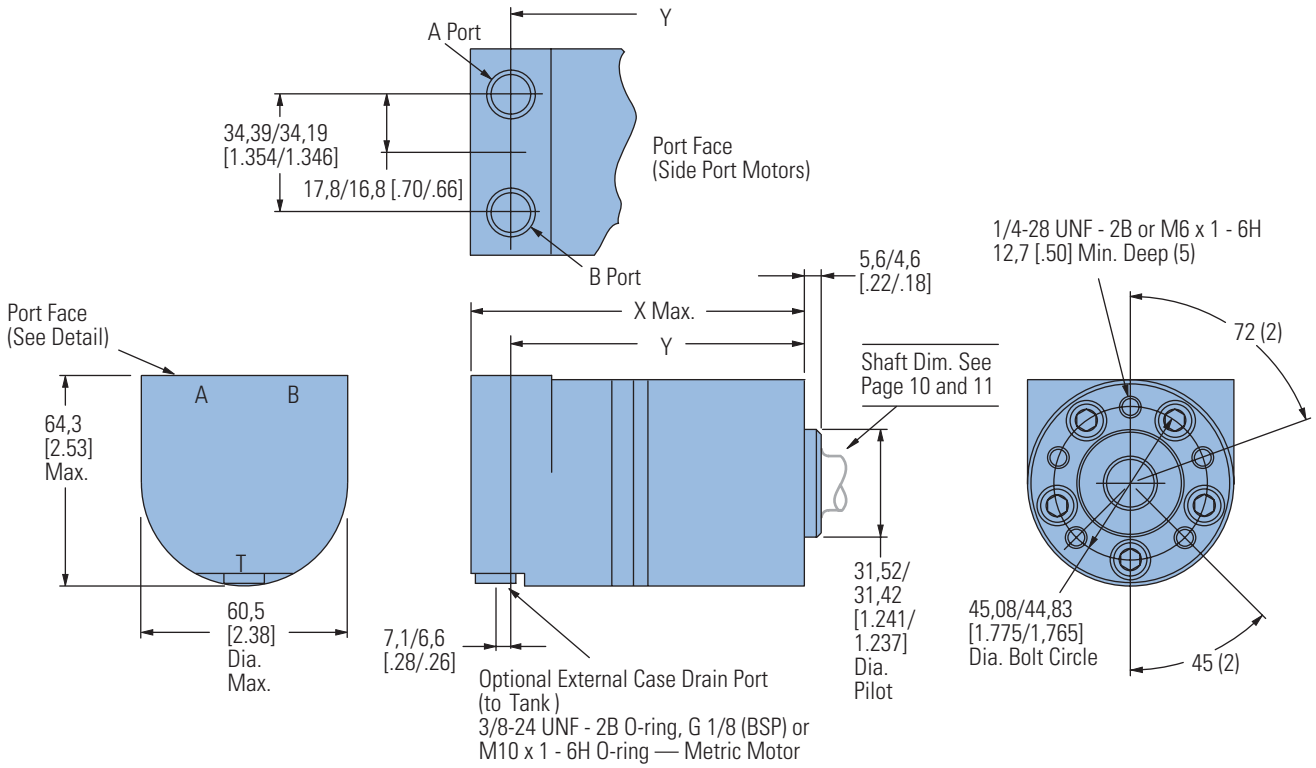

SIDE PORT MOTORS

Displacement cm^3/r [in^3/r]	X mm [inch]	Y mm [inch]
8,2 [.50]	103,9 [4.09]	89,4/ 87,4 [3.52/3.44]
12,9 [.79]	106,9 [4.21]	92,5/ 90,4 [3.64/3.56]
19,8 [1.21]	112,5 [4.38]	96,8/ 94,7 [3.81/3.73]
31,6 [1.93]	118,9 [4.68]	104,4/102,4 [4.11/4.03]
50,0 [3.00]	130,0 [5.12]	115,7/113,9 [4.56/4.48]

5/8 Inch Straight Keyed

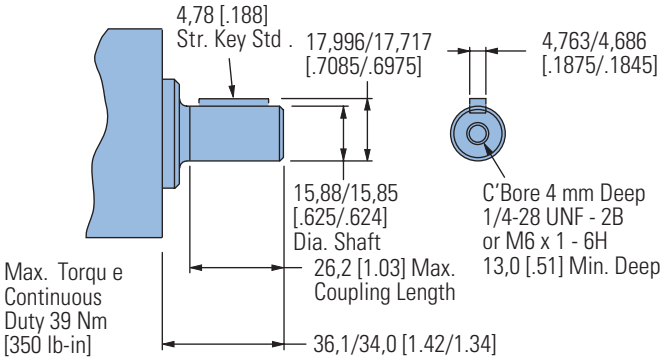

11/16 Inch Straight Keyed

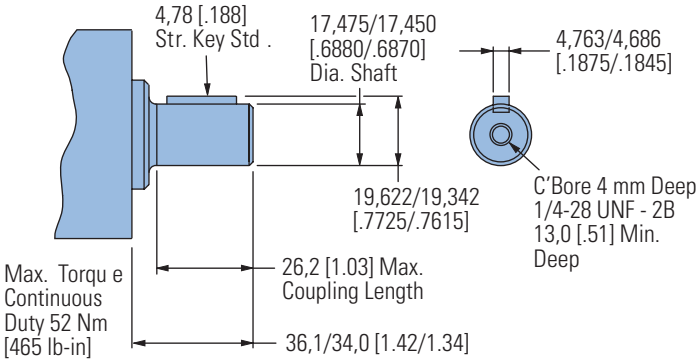

5/8 Inch Straight Keyed w/ Crosshole

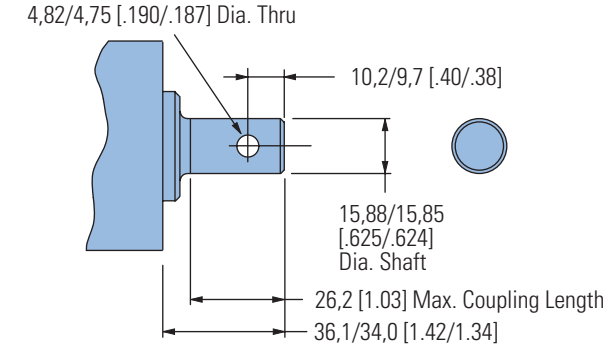

3/4 Inch Tapered

(Tapered Shaft End Per SAE J744

Except as Specified — 1.5 : 12 Ratio)

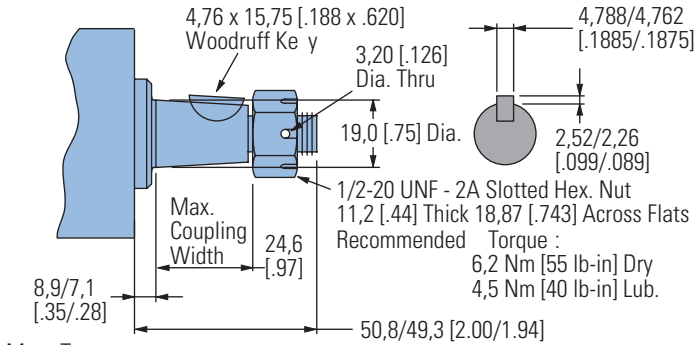

16 mm Straight Keyed

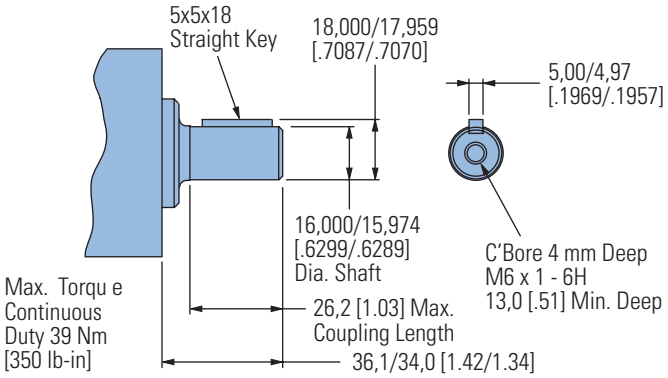

18 mm Straight Keyed

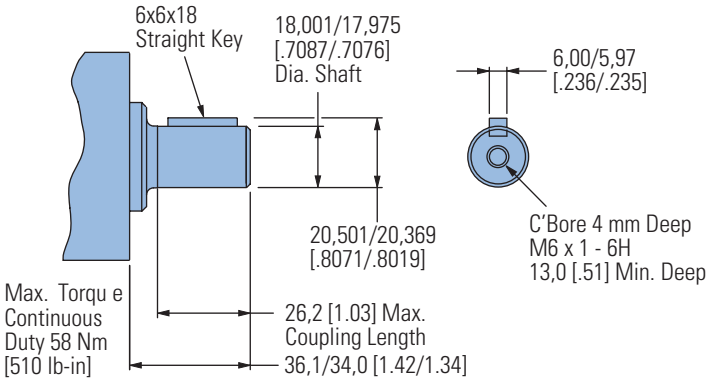

Involute 9T Splined — Metric

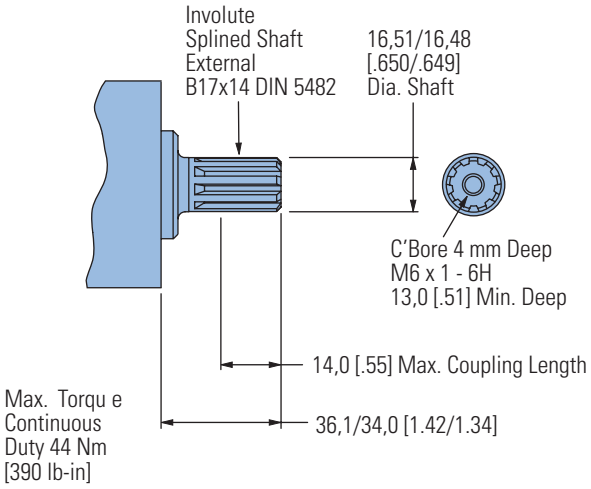

2 Bolt Flange Kits (2)

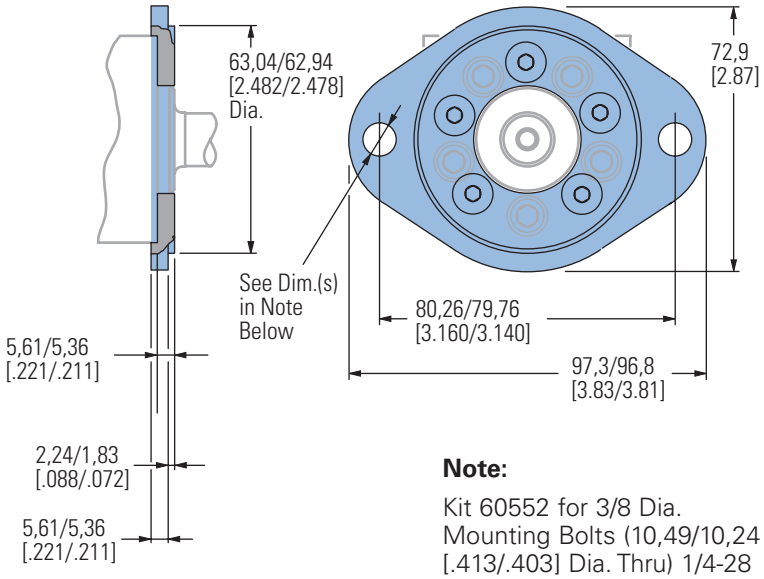

Note:

Kit 60552 for 3/8 Dia. Mounting Bolts (10,49/10,24 [.413/.403] Dia. Thru) 1/4-28 UNF screws for attaching flange to motor (5)

Kit 60553 for M8 Dia. Mounting Bolts (9,12/8,86 [.359/.349] Dia. Thru) M6 x 1 -6H screws for attaching flange to motor (5)

J Series (129-)

Product Numbers

Use digit prefix — 129- plus four digit number from charts for complete product number— Example 129-0479.

Orders will not be accepted without three digit prefix.

End Port

MOUNTING	SHAFT	PORT SIZE	DISPL. cm^3/r [in^3/r] / PRODUCT NUMBER				
			8,2 [.50]	12,9 [.79]	19,8 [1.21]	31,6 [1.93]	50,0 [3.00]
1/4-28 UNF 2B	5/8 inch Straight	9/16 -18 UNF 2B O-Ring (2)	129-0291	-0292	-0293	-0294	-0458
	11/16 inch Straight		129-0295	-0296	-0297	-0298	-0459
	Splined — Metric		129-0299	-0300	-0301	-0302	-0460
	3/4 inch Tapered		129-0480				
M6 x 1 - 6H	16 mm Straight	M14 x 1,5 - 6H O-Ring (2)	129-0303	-0304	-0305	-0306	-0461
	18 mm Straight		129-0307	-0308	-0309	-0310	-0462
	Splined — Metric		129-0311	-0312	-0313	-0314	-0463
	16 mm Straight	G 1/4 (BSP) (2)	129-0315	-0316	-0317	-0318	-0464
	18 mm Straight		129-0319	-0320	-0321	-0322	-0465
	Splined — Metric		129-0323	-0324	-0325	-0326	-0466
	16 mm Straight	G 3/8 (BSP) (2)*	129-0327	-0328	-0329	-0330	-0467
	18 mm Straight		129-0331	-0332	-0333	-0334	-0468
	Splined — Metric		129-0335	-0336	-0337	-0338	-0469

*Note: The Same Casting used for Side Ports is Required for G 3/8 (BSP) End Ports

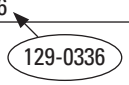

Side Port

MOUNTING	SHAFT	PORT SIZE	DISPL. cm^3/r [in^3/r] / PRODUCT NUMBER				
			8,2 [.50]	12,9 [.79]	19,8 [1.21]	31,6 [1.93]	50,0 [3.00]
1/4-28 UNF 2B	5/8 inch Straight	9/16 -18 UNF 2B O-Ring (2)	129-0339	-0340	-0341	-0342	-0470
	11/16 inch Straight		129-0343	-0344	-0345	-0346	-0471
	Splined — Metric		129-0347	-0348	-0349	-0350	-0472
	3/4 inch Tapered		129-0481				
M6 x 1 - 6H	16 mm Straight	M14 x 1,5 - 6H O-Ring (2)	129-0351	-0352	-0353	-0354	-0473
	18 mm Straight		129-0355	-0356	-0357	-0358	-0474
	Splined — Metric		129-0359	-0360	-0361	-0362	-0475
	16 mm Straight	G 1/4 (BSP) (2)	129-0363	-0364	-0365	-0366	-0476
	18 mm Straight						
	Splined — Metric		129-0367	-0368	-0369	-0370	-0477
	16 mm Straight	G 3/8 (BSP) (2)	129-0371	-0372	-0373	-0374	-0403
	18 mm Straight		129-0375	-0376	-0377	-0378	-0478
	Splined — Metric		129-0379	-0380	-0381	-0382	-0479

Two Bolt Mounting Flange Kit (for 3/8 inch Mounting Bolts) — Kit Number 60552 (includes 5 screws — 1/4 -28 UNF-2B)
Two Bolt Mounting Flange Kit (for M8 Mounting Bolts) — Kit Number 60553 (includes 5 screws — M6 x 1-6H)

J Series (129-)

Shaft Side Load Capacity

The hydrodynamic bearing has infinite life when shaft load ratings are not exceeded. Hence, the shaft side load capacity is more than adequate to handle most externally applied loads (such as belts, chains, etc.), providing the motor to shaft size is applied within its torque rating.

Allowable side load chart, shaft load location drawing (right) and load curves (below) are based on the side or radial loads being applied to shaft at locations A, B, and C, to determine the shaft side load capacity at locations other than those shown use the formula (shown below). For more information about shaft side loads on Char-Lynn motors contact your Eaton representative.

ALLOWABLE SIDE LOAD — KG [LB]

RPM	A	B	C
2300	29 [64]	24 [53]	20 [43]
1500	44 [98]	37 [82]	30 [66]
1250	54 [118]	44 [98]	36 [79]
1000	67 [147]	55 [122]	45 [99]
750	89 [196]	74 [163]	60 [132]
600	111 [245]	93 [204]	75 [165]
500	133 [294]	111 [245]	90 [198]
400	167 [368]	139 [306]	112 [248]
340	196 [432]	163 [360]	132 [291]

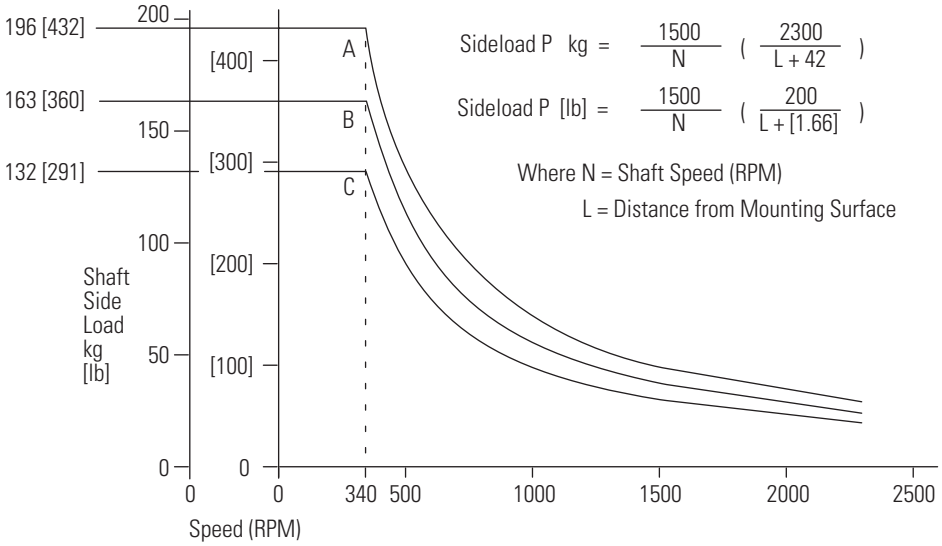

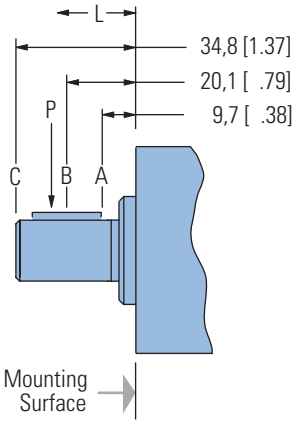

J Series (129-)

Case Pressure and Case Drain

The J Series now offers check valves in the motor as a standard feature. This addition reduces the case pressure in the motor to the return pressure of the system when the case drain is not used. For return pressures higher than the rated pressures (see chart) the external case drain can be connected. If the case drain line is needed, connect drain line to assure that the motor will always remain full of fluid.

Case Drain Advantage

In addition to providing lower case pressures for motors connected in series, there are advantages for adding an external case drain line to motors with normal case pressures as well. These advantages are:

Contamination Control — flushing the motor case.

Motor Cooler — exiting oil draws motor heat away.

Extend Motor Seal Life — maintain low case pressure with a preset restriction installed in the case drain line

Example:

A 14 Bar case pressure will cause a load of 40 kg, so the allowable thrust load will be 82 kg plus 40 = 120 kg kg pushing inward on shaft. Tension load is 82 kg under all case pressure conditions.

Example:

A 200 PSI case pressure will cause a load of 88 lbs, so the allowable thrust load will be 180 lbs plus 88 = 268 lbs pushing inward on shaft. Tension load is 180 lb under all case pressure conditions

Note:

J Series motors can be connected in parallel or in series.

Case pressure will add to the allowable compressive thrust load. Case pressure will push outward on the shaft at 20 kg/7 Bar [44 lb/100 PSI].

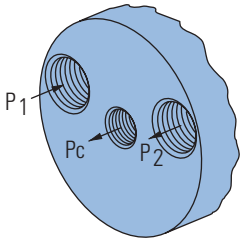

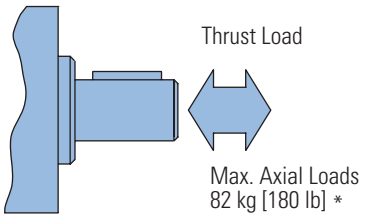

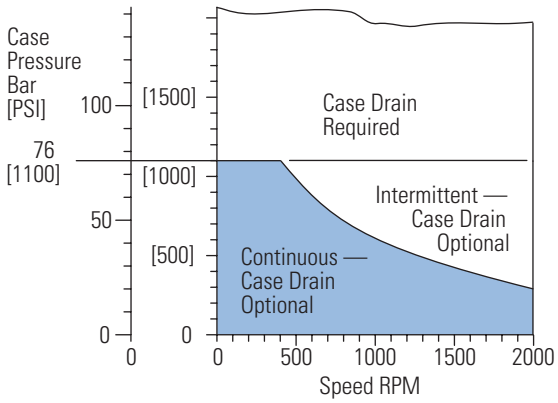

Case Pressure Seal Limitation

J Series (129-)

Model Code

The following 16-digit coding system has been developed to identify all of the configuration options for the J motor. Use this model code to specify a motor with the desired features. All 16-digits of the code must be present when ordering. You may want to photocopy the matrix below to ensure that each number is entered in the correct box.

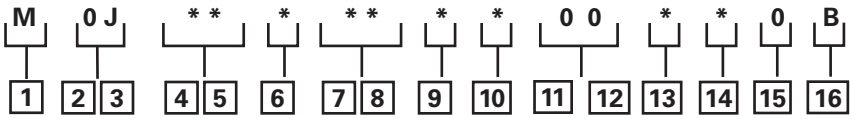

1 Product

M – Motor

2, 3 Series

0J – J Series

4, 5 Displacement cm³/r [in³/r]

05 – 8,2 [.50]

08 – 12,9 [.79]

12 – 19,8 [1.21]

19 – 31,6 [1.93]

30 – 50,0 [3.00]

6 Mounting Type

A – 5 Bolt: Dia. 31,47 [1.239] x 5,1 [.20] Pilot 1/4-28 UNF 2B Mounting Holes on 45 [1.77] Dia. Bolt Circle

B – 5 Bolt: Dia. 31,47 [1.239] x 5,1 [.20] Pilot M6 x 1- 6H Mounting Holes on 45 [1.77] Dia. Bolt Circle

C – 2 Bolt: Dia. 62,99 [2.480] x 2,0 [.08] Pilot 10,36[.408] Mounting Holes on 80,0 [3.150] Dia. Bolt Circle

D – 2 Bolt: Dia. 62,99 [2.480] x 2,0 [.08] Pilot 9,0 [.354] Mounting Holes on 80,0 [3.150] Dia. Bolt Circle

7, 8 Output Shaft

01 – 5/8 inch Dia. Straight with 4,72 [.186] Square Key and 1/4-28 UNF - 2B Threaded Hole

02 – 16 mm Dia. Straight with 5,00 [.197] Square Key with M6 x 1 - 6H Threaded Hole

04 – 11/16 inch Dia. Straight with 4,72 [.186] Square Key and 1/4-28 UNF - 2B Threaded Hole

05 – 18 mm Dia. Straight with 5,92 [.233] Square Key with M6 x 1 - 6H Threaded Hole

06 – Involute Splined 9T— Metric 16,50 [.650] Dia. (B17 x 14 DIN 5482) M6 x 1 - 6H Threaded Hole

07 – 5/8 inch Dia. Straight with 4,75 [.187] Dia. Crosshole

08 – 3/4 inch Tapered with Woodruff Key and Nut

09 – 5/8 inch Dia. Straight with 4,72 [.186] Sq. Key with 1/4-28 UNF -2B Threaded Hole (Plated for Corrosion Protection)

14 – 16 mm Dia. Straight with 5,00 [.197] Sq. Key with M6 x 1- 6H Threaded Hole (Plated for Corrosion Protection)

9 Ports

A – 9/16 -18 UNF - 2B O-Ring End Ported

B – G 1/4 (BSP) End Ported

C – M14 x 1,5 - 6H O-Ring Port, End Ported

D – 9/16 -18 UNF - 2B O-Ring Side Ported

E – G 3/8 (BSP) Side Ported

F – G 1/4 (BSP) Side Ported

H – G 3/8 (BSP) End Ported

10 Case Flow Options

0 – No Case Drain

1 – 3/8 -24 UNF - 2B O-Ring

2 – G 1/8 (BSP)

3 – M10 x 1 - 6H O-Ring

11, 12 Special Features (Hardware)

00 – None

13 Special Features (Assembly)

0 – None

1 – Reverse Rotation

14 Paint/Special Packaging

0 – No Paint, Individual Box

A – Low Gloss Black Primer, Individual Box

B – No Paint, Bulk Box Option

15 Eaton Assigned Code when Applicable

0 – Assigned Code

16 Eaton Assigned Design Code

B – Assigned Design Code

H Series (101-)

Highlights

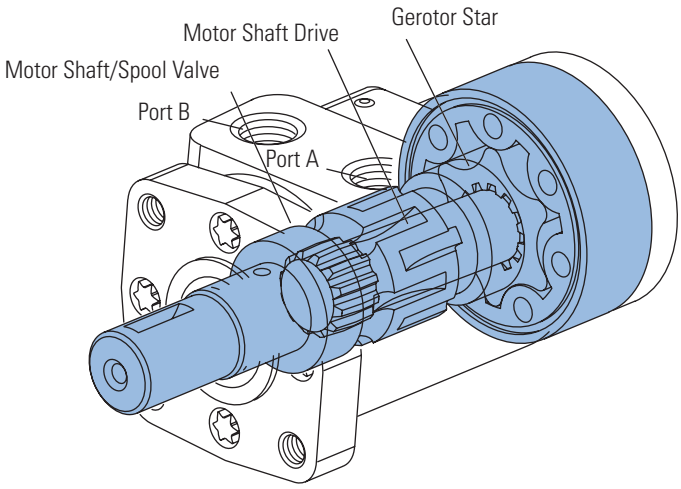

Description

Designed for medium duty applications, these motors use industry-proven spool valve technology combined with state-of-the-art gerotors. In addition, a wide variety of mounting flanges, shafts, Ports and valving options provide design flexibility. Direction of shaft rotation and shaft speed can be controlled easily and smoothly throughout the speed range of the motor, and equipment can be driven direct, eliminating costly mechanical components.

Specifications

Gerotor Element	13 Displacements
Flow l/min [GPM]	57 [15] Continuous***
	76 [20] Intermittent**
Speed	Up to 1100 RPM
Pressure bar [PSI]	125 [1800] Cont.***
	165 [2400] Inter.**
Torque Nm [lb-in]	407 [3604] Cont.***
	520 [4600] Inter.**

*** Continuous— (Cont.) Continuous rating, motor may be run continuously at these ratings.
** Intermittent— (Inter.) Intermittent operation, 10% of every minute.

Features:

- Time-tested Char-Lynn drive set
- Three moving components (gerotor-star, drive, and shaft)
- Optimized drive running angle
- Three-zone pressure design (inlet, return and case)
- Variety of displacements, shafts and mounts
- Special options to meet customer needs

Benefits:

- High efficiency
- Powerful compact package
- Design flexibility
- Extended leak-free performance

Applications:

- Agricultural augers, harvesters, seeders
- Car wash brushes
- Food processing
- Railroad maintenance equipment
- Machine tools
- Conveyors
- Industrial sweepers and floor polishers
- Saw mill works
- Turf equipment
- Concrete and asphalt equipment
- Skid steer attachments
- Many more


Conveyer


Combine


Sweeper


Salt and Sand Spreader

H Series (101-)

Specifications

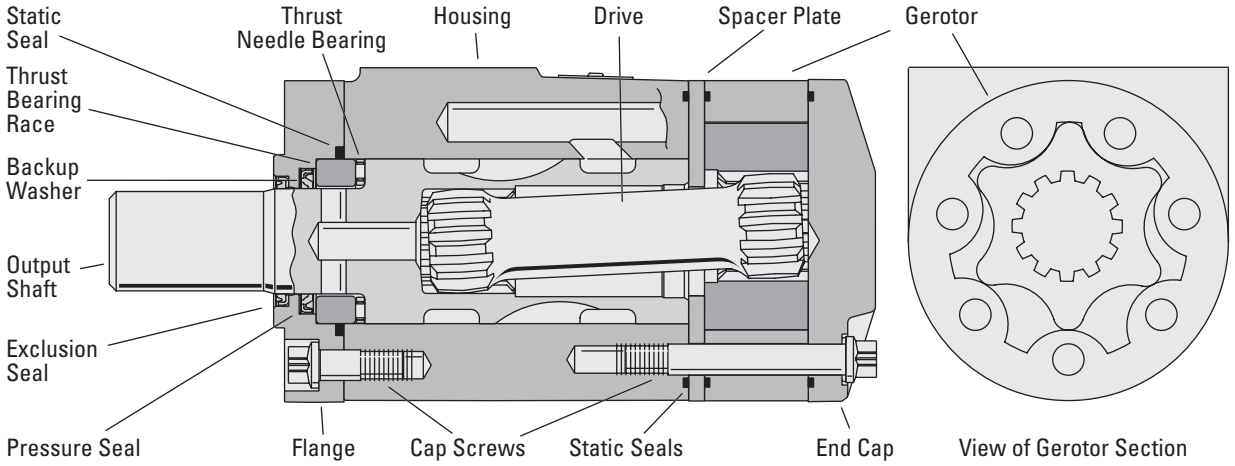

SPECIFICATION DATA — H MOTORS

Displ. cm^3/r [in^3/r]		36 [2.2]	46 [2.8]	59 [3.6]	74 [4.5]	97 [5.9]	120 [7.3]	146 [8.9]	159 [9.7]	185 [11.3]	231 [14.1]	293 [17.9]	370 [22.6]	739 [45.1]
Max. Speed (RPM) @ Continuous Flow		1021	969	953	760	585	469	385	353	304	243	192	152	74
Flow LPM [GPM]	Continuous	38 [10]	45 [12]	57 [15]	57 [15]	57 [15]	57 [15]	57 [15]	57 [15]	57 [15]	57 [15]	57 [15]	57 [15]	57 [15]
	Intermittent	38 [10]	53 [14]	64 [17]	68 [18]	68 [18]	76 [20]	76 [20]	76 [20]	76 [20]	76 [20]	76 [20]	76 [20]	76 [20]
Torque Nm [lb-in]	Continuous	56 [497]	73 [650]	91 [802]	118 [1044]	155 [1368]	192 [1699]	221 [1954]	233 [2059]	265 [2343]	302 [2669]	351 [3110]	407 [3604]	389 [3440]
	Intermittent	75 [668]	99 [876]	122 [1076]	158 [1401]	207 [1829]	257 [2278]	300 [2653]	319 [2824]	356 [3151]	415 [3671]	466 [4121]	484 [4283]	520 [4600]
Min. Starting Torque Nm [lb-in]	@ Cont. Pressure	46 [410]	59 [520]	76 [670]	95 [840]	124 [1100]	154 [1360]	176 [1560]	186 [1650]	211 [1870]	238 [2110]	282 [2500]	330 [2920]	316 [2800]
	@ Int. Pressure	63 [560]	81 [720]	104 [920]	130 [1150]	171 [1510]	2102 [1860]	46 [2180]	262] [2320	293 [2590]	339 [3000]	388 [3430]	408 [3610]	434 [3840]
Pressure ΔBar [Δ PSI]	Continuous	124 [1800]	124 [1800]	124 [1800]	124 [1800]	124 [1800]	124 [1800]	117 [1700]	114 [1650]	110 [1600]	100 [1450]	93 [1350]	86 [1250]	41 [600]
	Intermittent	165 [2400]	165 [2400]	165 [2400]	165 [2400]	165 [2400]	165 [2400]	159 [2300]	155 [2250]	148 [2150]	138 [2000]	124 [1800]	103 [1500]	55 [800]
End Ported Units Only														
Δ Bar [Δ PSI]	Cont. Pressure	83 [1200]	83 [1200]	76 [1100]	76 [1100]	76 [1100]	69 [1000]	69 [1000]	69 [1000]	62 [900]	55 [800]	48 [700]	57 [825]	27 [396]
	Intermittent	117 [1700]	117 [1700]	110 [1600]	110 [1600]	110 [1600]	103 [1500]	103 [1500]	103 [1500]	91 [1400]	90 [1300]	83 [1200]	68 [990]	36 [528]
Weight kg [lb]		5,1 [11.2]	5,1 [11.2]	5,2 [11.5]	5,2 [11.5]	5,4 [11.8]	5,5 [12.1]	5,6 [12.4]	5,7 [12.5]	5,8 [12.8]	6,0 [13.3]	6,3 [14.0]	6,7 [14.7]	8,4 [18,6]

A simultaneous maximum torque and maximum speed NOT recommended.

Note:

To assure best motor life, run motor for approximately one hour at 30% of rated pressure before application to full load. Be sure motor is filled with fluid prior to any load applications.

Note:

Δ pressure is derated for end ported units.

Maximum Inlet Pressure:

172 Bar [2500 PSI] without regard to Δ Bar [Δ PSI] and/or back pressure ratings or combination thereof.

6B splined or Tapered shafts are recommended whenever operation above 282 NM [2500 lb-in] of torque, especially for those applications subject to frequent reversals.

Δ Pressure:

The true Δ bar [Δ PSI] difference between inlet port and outlet port

Continuous Rating:

Motor may be run continuously at these ratings

Intermittent Operation:

10% of every minute

Recommended Fluids:

Recommended Fluids — Premium quality, anti-wear type hydraulic oil. Minimum oil viscosity (at operating temperature) should be the highest of the following:
100 SUS or

$$\left[\frac{300 \times \text{Bar}}{\text{RPM}} = \text{SUS}\right.$$

$$\left.\frac{20 \times \text{PSI}}{\text{RPM}} = \text{SUS}\right]$$

Recommended System Operating Temp.:

-34°C to 82°C [-30°F to 180°F]

Recommended Filtration:

per ISO Cleanliness Code 4406, level 20/18/13

H Series (101-)

Performance Data

Motors run with high efficiency in all areas designated with a number for torque and speed, however for best motor life select a motor to run with a torque and speed range printed in the light shaded area.

Performance data is typical at 120 SUS. Actual data may vary slightly from unit to unit in production.

Continuous

Intermittent

36 cm³/r [2.2 in³/r]

Δ Pressure Bar [PSI]

Flow LPM [GPM]	Continuous [200] 14	[400] 28	[600] 41	[800] 55	[1000] 69	[1200] 83	[1400] 97	[1600] 110	[1800] 124	Max. Continuous [2400] 165
[2]	[49]	[103]	[162]	[189]	[270]	[325]	[379]	[432]	[489]	[650]
	6	12	18	21	31	37	43	49	55	73
7,6	204	201	198	194	189	184	177	170	162	122
[4]	[47]	[106]	[160]	[191]	[274]	[327]	[384]	[439]	[495]	[654]
	5	12	18	22	31	37	43	50	56	74
15,1	408	407	402	399	394	387	381	373	365	323
[6]	[44]	[102]	[158]	[188]	[272]	[328]	[383]	[440]	[496]	[661]
	5	12	18	21	31	37	43	50	56	75
22,7	613	612	609	604	599	591	586	576	565	523
[8]	[40]	[97]	[153]	[184]	[270]	[326]	[383]	[440]	[497]	[668]
	5	11	17	21	31	37	43	50	56	75
30,3	817	817	814	807	799	793	785	776	762	721
Max. Continuous [10]	[36]	[90]	[148]	[180]	[265]	[322]	[380]	[438]	[495]	[664]
	4	10	17	20	30	36	43	49	56	75
37,9	1021	1021	1015	1008	1001	991	981	969	959	920

[90] Torque [lb-in]
10 Nm
1021 Speed RPM

46 cm³/r [2.8 in³/r]

Δ Pressure Bar [PSI]

Flow LPM [GPM]	Continuous [200] 14	[400] 28	[600] 41	[800] 55	[1000] 69	[1200] 83	[1400] 97	[1600] 110	[1800] 124	Max. Continuous [2400] 165
[2]	[64]	[136]	[212]	[284]	[355]	[426]	[497]	[567]	[641]	[852]
	7	15	24	32	40	48	56	64	72	96
7,6	161	158	156	153	148	145	139	133	127	95
[4]	[61]	[139]	[209]	[286]	[359]	[429]	[503]	[576]	[649]	[857]
	7	16	24	32	41	48	57	65	73	97
15,1	323	320	316	314	310	304	300	293	287	253
[6]	[58]	[134]	[207]	[282]	[356]	[430]	[502]	[577]	[650]	[867]
	7	15	23	32	40	49	57	65	73	98
22,7	486	481	479	475	471	464	461	453	444	410
[8]	[52]	[128]	[200]	[276]	[354]	[428]	[502]	[577]	[651]	[876]
	6	14	23	31	40	48	57	65	74	99
30,3	648	643	640	635	628	623	617	610	599	566
[10]	[47]	[118]	[194]	[269]	[347]	[423]	[498]	[575]	[649]	[871]
	5	13	22	30	39	48	56	65	73	98
37,9	808	803	798	793	787	779	771	761	753	722
Max. Continuous [12]	[36]	[109]	[188]	[260]	[340]	[417]	[492]	[567]	[643]	[864]
	4	12	21	29	38	47	56	64	73	98
45,4	969	964	960	952	946	938	931	922	914	877
Max. Intermittent [14]	[25]	[98]	[175]	[249]	[327]	[404]	[484]	[559]	[634]	
	3	11	20	28	37	46	55	63	72	
53,0	1127	1123	1115	1108	1100	1093	1086	1079	1068	

H Series (101-)

Performance Data

Motors run with high efficiency in all areas designated with a number for torque and speed, however for best motor life select a motor to run with a torque and speed range printed in the light shaded area.

Performance data is typical at 120 SUS. Actual data may vary slightly from unit to unit in production.

Continuous

Intermittent

59 cm³/r [3.6 in³/r]

Pressure Bar [PSI]

Continuous

Flow LPM [GPM]	[200] 14	[400] 28	[600] 41	[800] 55	[1000] 69	[1200] 83	[1400] 97	[1600] 110	[1800] 124	Max. Continuous	Max. Intermittent [2400] 165
[2] 7,6	[79] 9 127	[169] 19 125	[260] 29 123	[305] 34 121	[437] 49 117	[526] 59 114	[616] 70 109	[704] 80 103	[796] 90 96		[1055] 119 65
[4] 15,1	[76] 9 254	[168] 19 254	[257] 29 251	[307] 35 249	[441] 50 246	[529] 60 241	[620] 70 236	[710] 80 230	[800] 90 224		[1065] 120 193
[6] 22,7	[73] 8 381	[161] 18 381	[252] 28 380	[303] 34 377	[439] 50 373	[529] 60 368	[618] 70 364	[709] 80 358	[802] 91 349		[1069] 121 319
[8] 30,3	[64] 7 508	[151] 17 508	[243] 27 508	[294] 33 504	[428] 48 500	[519] 59 496	[609] 69 491	[701] 79 484	[794] 90 476		[1076] 122 446
[10] 37,9	[57] 6 635	[141] 16 635	[234] 26 634	[283] 32 630	[419] 47 626	[512] 58 621	[602] 68 614	[693] 78 608	[786] 89 601		[1071] 121 571
[12] 45,4	[45] 5 762	[131] 15 762	[227] 26 762	[274] 31 757	[409] 46 753	[505] 57 747	[593] 67 741	[684] 77 734	[778] 88 728		[1058] 120 694
[14] 53,0	[33] 4 889	[118] 13 889	[213] 24 887	[266] 30 882	[396] 45 877	[492] 56 872	[583] 66 866	[676] 76 860	[770] 87 851		[1055] 119 813
Max. Continuous [15] 56,8	[29] 3 953	[111] 13 953	[205] 23 951	[260] 29 945	[389] 44 940	[486] 55 935	[576] 65 929	[670] 76 921	[765] 86 913		[1055] 119 872
Max. Intermittent [20] 75,7	[17] 2 1080	[98] 11 1080	[192] 22 1077	[252] 28 1071	[377] 43 1067	[475] 54 1062	[567] 64 1055	[660] 75 1049	[757] 86 1040		

[111] 13 953 } Torque [lb-in] Nm / Speed RPM

74 cm³/r [4.5 in³/r]

Pressure Bar [PSI]

Continuous

Flow LPM [GPM]	[200] 14	[400] 28	[600] 41	[800] 55	[1000] 69	[1200] 83	[1400] 97	[1600] 110	[1800] 124	Max. Continuous	Max. Intermittent [2400] 165
[2] 7,6	[103] 12 101	[220] 25 99	[339] 38 98	[454] 51 96	[569] 64 93	[685] 77 90	[801] 91 86	[916] 103 81	[1036] 117 76		[1373] 155 51
[4] 15,1	[99] 11 203	[219] 25 201	[335] 38 199	[457] 52 197	[574] 65 194	[689] 78 191	[808] 91 187	[925] 105 182	[1042] 118 177		[1386] 157 153
[6] 22,7	[94] 11 305	[210] 24 303	[328] 37 301	[451] 51 298	[571] 65 296	[689] 78 292	[805] 91 288	[924] 104 283	[1044] 118 276		[1392] 157 252
[8] 30,3	[86] 10 406	[196] 22 404	[319] 36 402	[438] 49 399	[558] 63 396	[676] 76 393	[793] 90 388	[913] 103 383	[1033] 117 377		[1401] 158 352
[10] 37,9	[74] 8 507	[183] 21 505	[310] 35 502	[422] 48 499	[545] 62 496	[667] 75 492	[784] 89 486	[903] 102 482	[1024] 116 476		[1394] 158 452
[12] 45,4	[58] 7 608	[171] 19 606	[295] 33 603	[408] 46 600	[533] 60 596	[657] 74 591	[773] 87 587	[891] 101 581	[1013] 114 576		[1377] 156 549
[14] 53,0	[43] 5 709	[154] 17 706	[277] 31 702	[396] 45 698	[515] 58 694	[640] 72 691	[760] 86 686	[880] 99 681	[1002] 113 674		[1374] 155 643
Max. Continuous [15] 56,8	[36] 4 760	[145] 16 757	[268] 30 753	[387] 44 749	[506] 57 744	[632] 71 740	[750] 85 735	[873] 99 729	[996] 113 723		[1373] 155 690
Max. Intermittent [20] 75,7	[14] 2 904	[121] 14 902	[233] 26 898	[351] 40 895	[482] 54 891	[609] 69 887	[725] 82 882	[856] 97 877	[981] 111 869		

H Series (101-)

Performance Data

Motors run with high efficiency in all areas designated with a number for torque and speed, however for best motor life select a motor to run with a torque and speed range printed in the light shaded area.

Performance data is typical at 120 SUS. Actual data may vary slightly from unit to unit in production.

Continuous

Intermittent

97 cm³/r [5.9 in³/r]

Δ Pressure Bar [PSI]

Flow LPM [GPM]	Continuous [200] 14	[400] 28	[600] 41	[800] 55	[1000] 69	[1200] 83	[1400] 97	[1600] 110	[1800] 124	Max. Continuous [2400] 165
[2] 7,6	[134] 15 78	[292] 33 76	[442] 50 75	[593] 67 73	[746] 84 71	[899] 102 68	[1054] 119 65	[1209] 137 61	[1365] 154 55	[1806] 204 33
[4] 15,1	[131] 15 156	[281] 32 155	[436] 49 153	[596] 67 151	[750] 85 149	[903] 102 147	[1059] 120 143	[1212] 137 139	[1367] 154 134	[1828] 207 113
[6] 22,7	[126] 14 234	[269] 30 233	[425] 48 231	[588] 66 230	[747] 84 228	[900] 102 224	[1054] 119 221	[1206] 136 217	[1368] 155 210	[1823] 206 189
[8] 30,3	[110] 12 312	[246] 28 311	[408] 46 310	[566] 64 308	[718] 81 305	[873] 99 303	[1023] 116 300	[1177] 133 295	[1339] 151 291	[1829] 207 269
[10] 37,9	[96] 11 390	[231] 26 389	[392] 44 387	[539] 61 385	[699] 79 383	[859] 97 380	[1005] 114 376	[1156] 131 373	[1318] 149 368	[1821] 206 346
[12] 45,4	[77] 9 468	[218] 25 467	[378] 43 465	[522] 59 463	[681] 77 460	[844] 95 457	[990] 112 453	[1142] 129 449	[1301] 147 445	[1792] 202 421
[14] 53,0	[60] 7 546	[197] 22 544	[358] 40 542	[513] 58 539	[662] 75 537	[828] 94 535	[973] 110 531	[1131] 128 526	[1293] 146 521	[1776] 201 499
Max. Continuous [15] 56,8	[52] 6 585	[189] 21 583	[346] 39 581	[495] 56 578	[651] 74 575	[819] 93 573	[963] 109 569	[1126] 127 564	[1286] 145 559	[1778] 201 536
Max. Intermittent [20] 75,7	[25] 3 701	[157] 18 700	[311] 35 697	[455] 51 694	[625] 71 691	[790] 89 688	[941] 106 684	[1110] 125 681	[1272] 144 674	

[189] Torque [lb-in]
21 Nm
583 Speed RPM

120 cm³/r [7.3 in³/r]

Δ Pressure Bar [PSI]

Flow LPM [GPM]	Continuous [200] 14	[400] 28	[600] 41	[800] 55	[1000] 69	[1200] 83	[1400] 97	[1600] 110	[1800] 124	Max. Continuous [2400] 165
[2] 7,6	[162] 18 62	[357] 40 61	[544] 61 61	[736] 83 59	[927] 105 58	[1116] 126 55	[1305] 147 53	[1498] 169 49	[1687] 191 45	[2231] 252 26
[4] 15,1	[160] 18 125	[348] 39 124	[539] 61 123	[736] 83 121	[930] 105 120	[1119] 126 119	[1316] 149 116	[1506] 170 114	[1698] 192 110	[2268] 256 90
[6] 22,7	[155] 18 188	[338] 38 187	[530] 60 186	[729] 82 185	[923] 104 183	[1116] 126 180	[1310] 148 178	[1500] 169 175	[1699] 192 170	[2271] 257 152
[8] 30,3	[139] 16 250	[319] 36 250	[515] 58 249	[710] 80 247	[901] 102 245	[1094] 124 243	[1283] 145 241	[1476] 167 237	[1673] 189 233	[2278] 257 216
[10] 37,9	[121] 14 313	[303] 34 312	[497] 56 311	[686] 78 309	[883] 100 308	[1081] 122 306	[1267] 143 302	[1460] 165 300	[1655] 187 296	[2268] 256 278
[12] 45,4	[102] 12 375	[288] 33 374	[480] 54 373	[664] 75 371	[862] 97 370	[1060] 120 367	[1246] 141 365	[1440] 163 361	[1640] 185 358	[2232] 252 338
[14] 53,0	[78] 9 438	[263] 30 437	[458] 52 435	[652] 74 433	[841] 95 431	[1041] 118 430	[1228] 139 427	[1420] 160 423	[1616] 183 419	[2213] 250 401
Max. Continuous [15] 56,8	[67] 8 469	[253] 29 468	[446] 50 466	[632] 71 464	[828] 94 462	[1030] 116 460	[1214] 137 458	[1411] 159 454	[1608] 182 450	[2205] 249 430
Max. Intermittent [20] 75,7	[20] 2 626	[202] 23 624	[384] 43 621	[581] 66 618	[778] 88 617	[971] 110 614	[1169] 132 611	[1356] 153 609	[1559] 176 606	

H Series (101-)

Performance Data

Motors run with high efficiency in all areas designated with a number for torque and speed, however for best motor life select a motor to run with a torque and speed range printed in the light shaded area.

Performance data is typical at 120 SUS. Actual data may vary slightly from unit to unit in production.

Continuous

Intermittent

146 cm³/r [8.9 in³/r]

Δ Pressure Bar [PSI]

Flow LPM [GPM]	Δ Pressure Bar [PSI] Continuous								Max. Continuous	Max. Intermittent
	[200] 14	[400] 28	[600] 41	[800] 55	[1000] 69	[1200] 83	[1400] 97	[1600] 110	[1700] 117	[2300] 159
[2] 7,6	[198] 22 51	[435] 49 50	[664] 75 50	[897] 101 49	[1130] 128 47	[1361] 154 45	[1591] 180 43	[1827] 206 40	[1942] 219 39	[2611] 295 24
[4] 15,1	[196] 22 103	[424] 48 102	[657] 74 101	[898] 101 99	[1133] 128 99	[1365] 154 97	[1604] 181 95	[1836] 207 93	[1954] 221 92	[2648] 299 78
[6] 22,7	[189] 21 154	[412] 47 153	[646] 73 152	[889] 100 151	[1125] 127 150	[1361] 154 148	[1598] 181 146	[1829] 207 143	[1951] 220 141	[2653] 300 128
[8] 30,3	[169] 19 205	[389] 44 205	[628] 71 204	[866] 98 203	[1098] 124 201	[1333] 151 200	[1564] 177 197	[1799] 203 195	[1919] 217 193	[2649] 299 180
[10] 37,9	[148] 17 257	[369] 42 256	[605] 68 255	[836] 94 253	[1076] 122 252	[1318] 149 251	[1544] 174 248	[1780] 201 246	[1899] 215 244	[2789] 315 231
[12] 45,4	[125] 14 308	[351] 40 307	[586] 66 306	[810] 92 305	[1051] 119 303	[1293] 146 301	[1519] 172 299	[1756] 198 296	[1878] 212 295	[2606] 294 281
[14] 53,0	[95] 11 359	[321] 36 358	[558] 63 357	[795] 90 355	[1026] 116 354	[1290] 146 352	[1497] 169 350	[1731] 196 347	[1851] 209 346	[2580] 292 331
Max. Continuous [15] 56,8	[82] 9 85	[308] 35 384	[544] 61 383	[771] 87 381	[1010] 114 379	[1256] 142 378	[1480] 167 375	[1720] 194 373	[1840] 208 371	[2569] 290 356
Max. Intermittent [20] 75,7	[24] 3 513	[246] 28 512	[468] 53 509	[708] 80 507	[948] 107 506	[1184] 134 504	[1425] 161 501	[1653] 187 499	[1780] 201 498	

159 cm³/r [9.7 in³/r]

Δ Pressure Bar [PSI]

Flow LPM [GPM]	Δ Pressure Bar [PSI] Continuous								Max. Continuous	Max. Intermittent
	[200] 14	[400] 28	[600] 41	[800] 55	[1000] 69	[1200] 83	[1400] 97	[1600] 110	[1650] 134	[2250] 155
[2] 7,6	[209] 24 47	[465] 53 46	[715] 81 46	[973] 110 45	[1228] 139 44	[1478] 167 42	[1724] 195 40	[1981] 224 38	[2046] 231 37	[2764] 312 23
[4] 15,1	[210] 24 94	[460] 52 94	[710] 80 93	[971] 110 91	[1229] 139 91	[1480] 167 90	[1745] 197 89	[1996] 226 87	[2059] 233 87	[2813] 318 76
[6] 22,7	[205] 23 141	[454] 51 141	[704] 80 140	[965] 109 139	[1216] 137 138	[1477] 167 136	[1738] 196 134	[1991] 225 132	[2055] 232 132	[2824] 319 119
[8] 30,3	[186] 21 188	[440] 50 188	[693] 78 187	[951] 107 186	[1205] 136 185	[1461] 165 183	[1716] 194 181	[1973] 223 179	[2038] 230 178	[2808] 317 166
[10] 37,9	[164] 19 235	[422] 48 234	[671] 76 234	[930] 105 232	[1189] 134 232	[1451] 164 230	[1702] 192 228	[1965] 219 226	[2032] 230 225	[2789] 315 213
[12] 45,4	[144] 16 282	[404] 46 281	[652] 74 281	[900] 102 279	[1163] 131 279	[1421] 161 277	[1674] 189 275	[1937] 219 273	[2004] 226 272	[2770] 313 260
[14] 53,0	[109] 12 330	[374] 42 329	[623] 70 328	[883] 100 327	[1140] 129 325	[1396] 158 323	[1653] 187 322	[1900] 215 319	[1963] 222 319	[2727] 308 306
Max. Continuous [15] 56,8	[92] 10 353	[359] 41 352	[612] 69 351	[861] 97 350	[1123] 127 348	[1381] 156 347	[1633] 185 345	[1886] 213 343	[1950] 220 342	[2712] 306 330
Max. Intermittent [20] 75,7	[26] 3 471	[268] 30 470	[510] 58 467	[772] 87 465	[1034] 117 464	[1290] 146 462	[1553] 175 460	[1802] 204 458	[1865] 211 458	

[359] Torque [lb-in]
41 Nm
352 Speed RPM

H Series (101-)

Performance Data

Motors run with high efficiency in all areas designated with a number for torque and speed, however for best motor life select a motor to run with a torque and speed range printed in the light shaded area.

Performance data is typical at 120 SUS. Actual data may vary slightly from unit to unit in production.

Continuous

Intermittent

185 cm³/r [11.3 in³/r]

Δ Pressure Bar [PSI]
Continuous

Flow LPM [GPM]	[200] 14	[400] 28	[600] 41	[800] 55	[1000] 69	[1200] 83	[1400] 97	[1600] 110	Max. Continuous [2150] 148	Max. Intermittent
[2] 7,6	[257] 29 40	[554] 63 40	[847] 96 39	[1150] 130 38	[1447] 163 37	[1739] 196 36	[2035] 230 33	[2320] 262 29	[3103] 351 12	
[4] 15,1	[254] 29 81	[546] 62 81	[845] 95 80	[1145] 129 79	[1448] 164 78	[1744] 197 77	[2049] 232 76	[2343] 265 74	[3147] 356 63	
[6] 22,7	[246] 28 121	[540] 61 121	[834] 94 120	[1137] 128 120	[1434] 162 119	[1736] 196 117	[2036] 230 115	[2337] 264 112	[3151] 356 100	
[8] 30,3	[224] 25 162	[520] 59 162	[820] 93 161	[1117] 126 160	[1414] 160 159	[1716] 194 157	[2014] 228 155	[2315] 262 152	[3133] 354 140	
[10] 37,9	[202] 23 202	[499] 56 202	[793] 90 201	[1095] 124 201	[1394] 158 200	[1699] 192 198	[1997] 226 196	[2299] 260 193	[3112] 352 181	
[12] 45,4	[176] 20 243	[475] 54 242	[767] 87 242	[1063] 120 241	[1368] 155 240	[1664] 188 238	[1969] 222 236	[2268] 256 234	[3088] 349 222	
[14] 53,0	[140] 16 283	[443] 50 283	[735] 83 282	[1035] 117 281	[1340] 151 280	[1637] 185 279	[1936] 219 277	[2227] 252 274	[3051] 345 262	
Max. Continuous [15] 56,8	[120] 14 304	[425] 48 303	[719] 81 302	[1014] 115 301	[1320] 149 300	[1618] 183 299	[1914] 216 297	[2205] 249 294	[3023] 342 283	
Max. Intermittent [20] 75,7	[27] 3 405	[321] 36 404	[612] 69 402	[911] 103 401	[1211] 137 400	[1504] 170 398	[1795] 203 397			

231 cm³/r [14.1 in³/r]

Δ Pressure Bar [PSI]
Continuous

Flow LPM [GPM]	[200] 14	[400] 28	[600] 41	[800] 55	[1000] 69	[1200] 83	[1400] 97	[1450] 100	Max. Continuous [2000] 138	Max. Intermittent
[2] 7,6	[338] 38 32	[707] 80 32	[1074] 121 31	[1456] 165 30	[1827] 206 30	[2192] 248 28	[2572] 291 26	[2657] 300 25		
[4] 15,1	[328] 37 65	[695] 79 65	[1076] 122 64	[1447] 163 63	[1827] 206 62	[2201] 249 62	[2577] 291 60	[2669] 302 60	[3671] 415 50	
[6] 22,7	[317] 36 97	[687] 78 97	[1057] 119 97	[1434] 162 96	[1811] 205 95	[2186] 247 94	[2555] 289 92	[2650] 299 91	[3668] 414 80	
[8] 30,3	[289] 33 130	[659] 74 130	[1038] 117 130	[1406] 159 129	[1777] 201 128	[2160] 244 127	[2531] 286 124	[2625] 297 124	[3644] 412 112	
[10] 37,9	[265] 30 162	[631] 71 162	[1004] 113 162	[1381] 156 162	[1751] 198 160	[2131] 241 158	[2510] 284 156	[2602] 294 156	[3608] 408 145	
[12] 45,4	[230] 26 195	[599] 68 195	[968] 109 194	[1345] 152 194	[1722] 195 193	[2088] 236 192	[2480] 280 189	[2571] 290 189	[3571] 403 178	
[14] 53,0	[191] 22 227	[563] 64 227	[927] 105 227	[1299] 147 226	[1686] 190 226	[2058] 233 224	[2428] 274 222	[2519] 285 221	[3532] 399 212	
Max. Continuous [15] 56,8	[167] 19 243	[538] 61 243	[904] 102 243	[1279] 145 242	[1661] 188 242	[2030] 229 240	[2404] 272 238	[2493] 282 238	[3488] 394 229	
Max. Intermittent [20] 75,7	[29] 3 324	[411] 46 324	[785] 89 323	[1152] 130 322	[1520] 172 322	[1877] 212 320	[2222] 251 319	[2318] 262 318		

[538] 61 243 } Torque [lb-in] Nm
Speed RPM

H Series (101-)

Performance Data

Motors run with high efficiency in all areas designated with a number for torque and speed, however for best motor life select a motor to run with a torque and speed range printed in the light shaded area.

Performance data is typical at 120 SUS. Actual data may vary slightly from unit to unit in production.

Continuous

Intermittent

293 cm³/r [17.9 in³/r]

Δ Pressure Bar [PSI]

Flow LPM [GPM]	Continuous [200] 14	[400] 28	[600] 41	[800] 55	[1000] 69	[1200] 83	[1350] 93	Max. Continuous	Max. Intermittent [1800] 124
[2] 7,6	[427] 48 26	[893] 101 25	[1361] 154 25	[1829] 207 24	[2293] 259 22	[2672] 302 16	[2977] 336 13		
[4] 15,1	[419] 47 51	[886] 100 51	[1362] 154 51	[1833] 207 50	[2305] 260 49	[2771] 313 47	[3110] 351 44		[4107] 464 22
[6] 22,7	[402] 45 77	[872] 99 77	[1342] 152 76	[1819] 206 76	[2291] 259 74	[2757] 312 71	[3098] 350 68		[4121] 466 54
[8] 30,3	[367] 41 102	[838] 95 102	[1316] 149 102	[1785] 202 101	[2252] 254 100	[2723] 308 98	[3070] 347 95		[4086] 462 84
[10] 37,9	[332] 38 128	[803] 91 128	[1276] 144 128	[1749] 198 127	[2215] 250 126	[2684] 303 123	[3034] 343 120		[4061] 459 108
[12] 45,4	[289] 33 153	[760] 86 153	[1230] 139 153	[1706] 193 153	[2177] 246 151	[2634] 298 149	[2989] 338 146		[4012] 453 135
[14] 53,0	[241] 27 179	[712] 80 179	[1176] 133 179	[1650] 186 179	[2126] 240 177	[2592] 293 175	[2935] 332 172		[3963] 448 161
Max. Continuous [15] 56,8	[211] 24 192	[683] 77 192	[1149] 130 192	[1623] 183 191	[2096] 237 190	[2558] 289 188	[2905] 328 185		[3914] 442 174
Max. Intermittent [20] 75,7	[43] 5 256	[527] 60 256	[1001] 113 255	[1463] 165 255	[1919] 217 254	[2375] 268 252	[2720] 307 249		

370 cm³/r [22.6 in³/r]

Δ Pressure Bar [PSI]

Flow LPM [GPM]	Continuous [200] 14	[400] 28	[600] 41	[800] 55	[1000] 69	[1200] 83	[1250] 86	Max. Continuous [1500] 103	Max. Intermittent
[2] 7,6	[537] 61 20	[1121] 127 20	[1715] 194 20	[2285] 258 19	[2862] 323 16				
[4] 15,1	[532] 60 40	[1123] 127 40	[1715] 194 40	[2308] 261 39	[2893] 327 38	[3467] 392 36	[3604] 407 35	[4274] 483 27	
[6] 22,7	[508] 57 61	[1100] 124 61	[1693] 191 61	[2294] 259 60	[2884] 326 58	[3458] 391 55	[3598] 407 53	[4283] 484 47	
[8] 30,3	[463] 52 81	[1060] 120 81	[1661] 188 81	[2255] 255 80	[2840] 321 79	[3414] 386 76	[3557] 402 74	[4254] 481 68	
[10] 37,9	[414] 47 101	[1017] 115 101	[1613] 182 101	[2203] 249 101	[2788] 315 99	[3363] 380 96	[3506] 396 94	[4212] 476 88	
[12] 45,4	[363] 41 121	[960] 108 121	[1553] 175 121	[2152] 243 121	[2737] 309 119	[3305] 373 116	[3446] 389 115	[4152] 469 109	
[14] 53,0	[303] 34 142	[897] 101 142	[1484] 168 142	[2086] 236 142	[2667] 301 140	[3246] 367 137	[3386] 383 136	[4092] 462 130	
Max. Continuous [15] 56,8	[266] 30 152	[862] 97 152	[1452] 164 152	[2050] 232 152	[2630] 297 150	[3206] 362 148	[3347] 378 147	[4054] 458 140	
Max. Intermittent [20] 75,7	[61] 7 202	[671] 76 202	[1269] 143 202	[1847] 209 202	[2410] 272 202	[2987] 337 199	[3119] 352 198		

[862] 97 152 } Torque [lb-in] Nm Speed RPM

739 cm³/r [45.1 in³/r]

Δ Pressure Bar [PSI]

Flow LPM [GPM]	Continuous [200] 14	[400] 28	[600] 41	Max. Continuous	Max. Intermittent [800] 55
[2] 7,6	[1080] 122 10	[2250] 254 10	[3440] 389 10		[4570] 516 9
[4] 15,1	[1070] 121 20	[2250] 254 20	[3440] 389 19		[4600] 520 18
[6] 22,7	[1020] 115 30	[2200] 249 30	[3390] 383 29		[4590] 519 27
[8] 30,3	[945] 107 40	[2135] 241 40	[3330] 376 39		[4515] 510 37
[10] 37,9	[840] 95 50	[2050] 232 50	[3250] 367 48		[4430] 501 46
[12] 45,4	[740] 84 60	[1945] 220 59	[3130] 354 58		[4320] 488 55
[14] 53,0	[630] 71 69	[1820] 206 68	[3005] 340 68		[4195] 474 66
Max. Continuous [15] 56,8	[540] 61 74	[1735] 196 74	[2905] 328 73		[4130] 467 72
Max. Intermittent [20] 75,7	[143] 16 99	[1350] 153 98	[2565] 290 97		[3705] 419 96

H Series (101-)

Dimensions

(Refer to pages B-4-19 thru B-4-22 for shaft and port dimensions.)

Standard Rotation Viewed from Shaft End

Port A Pressurized — CW

Port B Pressurized — CCW

Note:

Mounting surface flatness requirement is ▱ ,13 mm [.005 inch] Max.

Note:

End ported motor pressure is derated. Reference page B-2-2 for ratings.

2 Bolt Flange

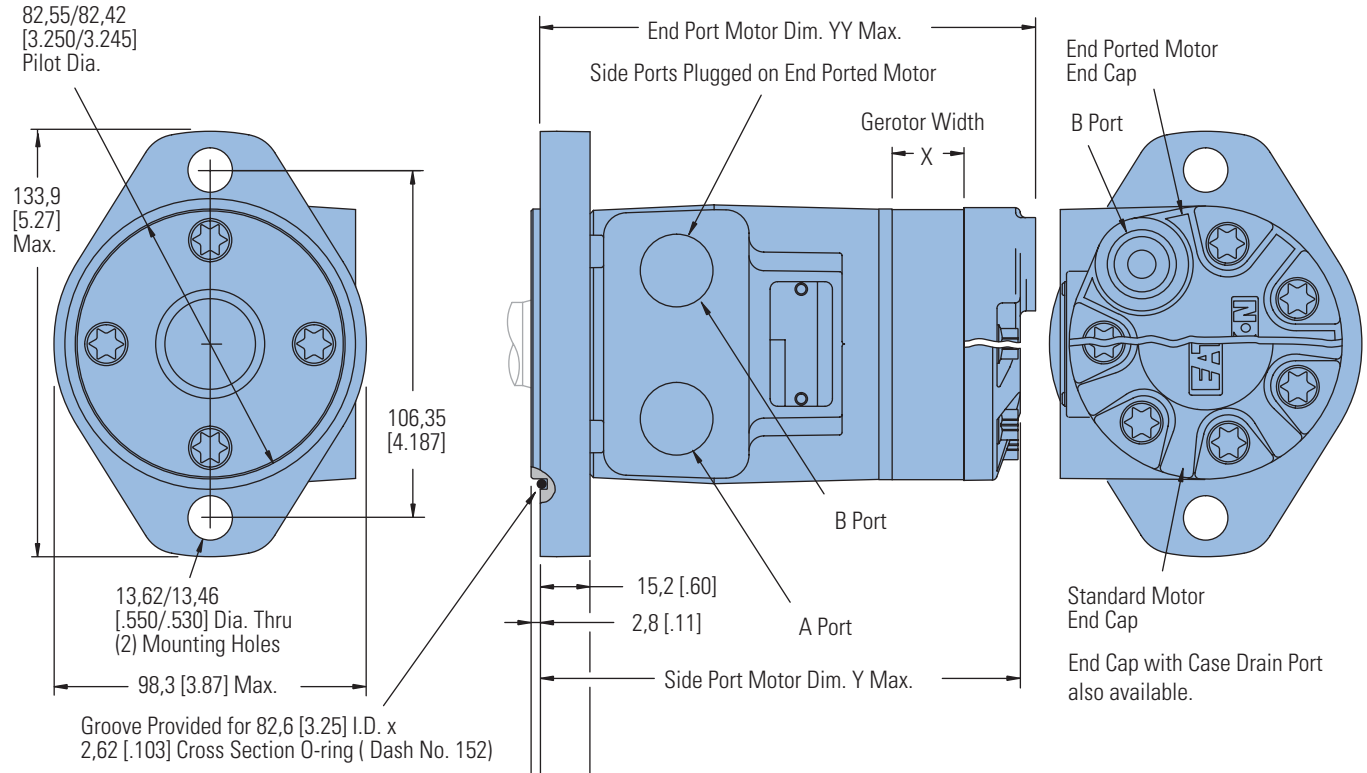

4 Bolt Flange

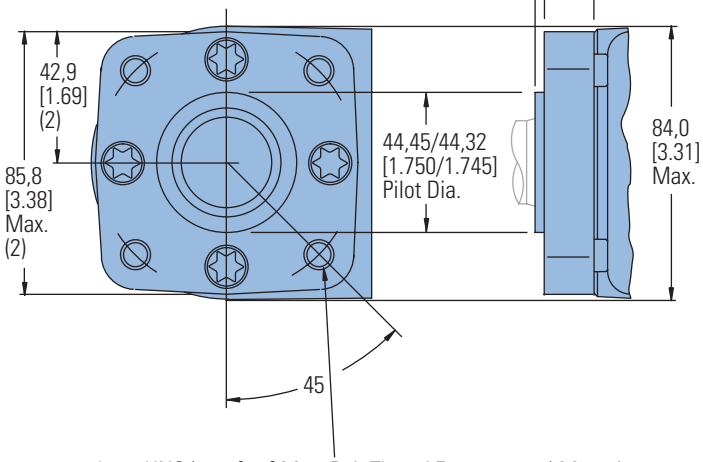

3/8-16 UNC (15,2 [.60] Max. Bolt Thread Engagement) Mounting Holes (4) Equally Spaced on 82,6 [3.25] Dia. Bolt Circle
or
M10 x 1,5 (15,2 [.60] Max. Bolt Thread Engagement) Mounting Holes (4) Equally Spaced on 82,6 [3.25] Dia. Bolt Circle

2 AND 4 BOLT FLANGE

Displacement cm³/r [in³/r]	X mm [inch]	Y mm [inch]	YY mm [inch]
36 [2.2]	6,4 [.25]	132,1 [5.20]	138,5 [5.45]
46 [2.8]	6,4 [.25]	132,1 [5.20]	138,5 [5.45]
59 [3.6]	10,2 [.40]	135,9 [5.35]	142,3 [5.60]
74 [4.5]	10,2 [.40]	135,9 [5.35]	142,3 [5.60]
97 [5.9]	13,2 [.52]	139,0 [5.47]	145,3 [5.72]
120 [7.3]	16,5 [.65]	142,3 [5.60]	148,6 [5.85]
146 [8.9]	20,1 [.79]	145,8 [5.74]	152,2 [5.99]
159 [9.7]	21,9 [.86]	147,6 [5.81]	154,0 [6.06]
185 [11.3]	25,4 [1.00]	151,2 [5.95]	157,5 [6.20]
231 [14.1]	31,8 [1.25]	157,5 [6.20]	
293 [17.9]	40,4 [1.59]	166,2 [6.54]	
370 [22.6]	50,8 [2.00]	176,6 [6.95]	
739 [45.1]	101,6 [4.00]	227,4 [8.95]	

H Series (101-)

Product Numbers

Use digit prefix —101- plus four digit number from charts for complete product number—Example 101-1001. Orders will not be accepted without three digit prefix.

2 Bolt Flange

SHAFT	PORT SIZE	DISPL. cm^3/r [in^3/r] / PRODUCT NUMBER												
		36 [2.2]	46 [2.8]	59 [3.6]	74 [4.5]	97 [5.9]	120 [7.3]	146 [8.9]	159 [9.7]	185 [11.3]	231 [14.1]	293 [17.9]	370 [22.6]	740 [45.0]
1 in. Straight w/Woodruff key	7/8-14 O-Ring	101-1700	-1033	-1701	-1034	-1035	-1702	-1703	-1036	-1037	-1038	-1039	-1040	—
	1/2 NPTF	101-1704	-1025	-1705	-1026	-1027	-1706	-1707	-1028	-1029	-1030	-1031	-1032	—
	Manifold*	101-1708	-1041	-1709	-1042	-1043	-1710	-1711	-1044	-1045	-1046	-1047	-1048	—
1 in. SAE 6B Splined	7/8-14 O-Ring	101-1721	-1081	-1722	-1082	-1083	-1723	-1724	-1084	-1085	-1086	-1087	-1088	—
	1/2 NPTF	101-1725	-1073	-1726	-1074	-1075	-1727	-1728	-1076	-1077	-1078	-1079	-1080	—
	Manifold*	101-1729	-1089	-1730	-1090	-1091	-1731	-1732	-1092	-1093	-1094	-1095	-1096	—
1 in. Straight w/ .31 Dia. Crosshole	7/8-14 O-Ring	101-1796	-1797	-1798	-1799	-1800	-1801	-1802	-1803	—	—	—	—	—
	1/2 NPTF	101-1804	-1805	-1806	-1807	-1808	-1870	-1809	-1810	—	—	—	—	—
	Manifold*	101-1811	-1812	-1813	-1814	-1815	-1816	-1817	-1818	—	—	—	—	—
1 in. Straight w/ .40 Dia. Crosshole	7/8-14 O-Ring	101-1819	-1323	-1820	-1324	-1325	-1821	-1822	-1326	—	—	—	—	—
	1/2 NPTF	101-1823	-1319	-1824	-1320	-1825	-1826	-1827	-1828	—	—	—	—	—
	Manifold*	101-1829	-1463	-1830	-1831	-1832	-1833	-1834	-1871	—	—	—	—	—

101-1834

4 Bolt Flange

SHAFT	PORT SIZE	DISPL. cm^3/r [in^3/r] / PRODUCT NUMBER												
		36 [2.2]	46 [2.8]	59 [3.6]	74 [4.5]	97 [5.9]	120 [7.3]	146 [8.9]	159 [9.7]	185 [11.3]	231 [14.1]	293 [17.9]	370 [22.6]	740 [45.0]
1 in. Straight w/ Woodruff key O-Ring	7/8-14 O-Ring	101-1749	-1009	-1750	-1010	-1011	-1751	-1752	-1012	-1013	-1014	-1015	-1016	—
	1/2 NPTF	101-1753	-1001	-1754	-1002	-1003	-1755	-1756	-1004	-1005	-1006	-1007	-1008	—
	Manifold*	101-1757	-1017	-1758	-1018	-1019	-1759	-1760	-1020	-1021	-1022	-1023	-1024	—
1 in. SAE 6B Splined	7/8-14 O-Ring	101-1761	-1057	-1762	-1058	-1059	-1872	-1763	-1060	-1061	-1062	-1063	-1064	—
	1/2 NPTF	101-1764	-1049	-1765	-1050	-1051	-1766	-1767	-1052	-1053	-1054	-1055	-1056	—
	Manifold*	101-1768	-1065	-1769	-1066	-1067	-1770	-1771	-1068	-1069	-1070	-1071	-1072	—
1 in. Straight w/ .31 Dia. Crosshole	7/8-14 O-Ring	101-1835	-1836	-1837	-1838	-1839	-1840	-1841	-1842	—	—	—	—	—
	1/2 NPTF	101-1843	-1497	-1844	-1449	-1352	-1845	-1846	-1847	—	—	—	—	—
	Manifold*	101-1848	-1466	-1849	-1459	-1850	-1851	-1852	-1853	—	—	—	—	—
1 in. Straight w/ .40 Dia. Crosshole	7/8-14 O-Ring	101-1854	-1311	-1855	-1856	-1857	-1858	-1859	-1860	—	—	—	—	—
	1/2 NPTF	101-1861	-1313	-1862	-1312	-1314	-1863	-1864	-1315	—	—	—	—	—
	Manifold*	101-1865	-1305	-1866	-1306	-1307	-1867	-1868	-1869	—	—	—	—	—

101-1868

4 Bolt Flange with Corrosion Protection

SHAFT	PORT SIZE	DISPL. cm^3/r [in^3/r] / PRODUCT NUMBER												
		36 [2.2]	46 [2.8]	59 [3.6]	74 [4.5]	97 [5.9]	120 [7.3]	146 [8.9]	159 [9.7]	185 [11.3]	231 [14.1]	293 [17.9]	370 [22.6]	740 [45.0]
1 in. Straight w/ Woodruff Key	1/2 NPTF	101-2032	-2014	-2093	-2027	-2013	-2094	-2095	-2015	-2028	-2029	-2030	-2031	—
	Manifold*		-2067							-2068	-2069			

*Manifold product numbers shown are for motors with four 5/16-18 port face mounting threads. Manifold, manifold mounting O-Rings and bolts are NOT included.

For H Series Motors with a configuration Not Shown in the charts above: Use the model code system on page B-2-11 to specify the product in detail.

H Series (101-)

Model Code

The following 30-digit coding system has been developed to identify all of the configuration options for the H motor. Use this model code to specify a motor with the desired features. All 30-digits of the code must be present when ordering. You may want to photocopy the matrix below to ensure that each number is entered in the correct box.

M	H	0	*	*	*	*	*	*	*	*	*	*	*	*	*	*	*	*	*	*	*	*	*	*	*	*	J
1	2	3	4	5	6	7	8	9	10	11	12	13	14	15	16	17	18	19	20	21	22	23	24	25	26	27	28	29	30

1 Product

M - Motor

2, 3 Series

H0 - H Motor

4, 5, 6 Displacement cm³/r [in³/r]

022 – 36 [2.2]†

028 – 46 [2.8]

035 – 58 [3.5]†

045 – 74 [4.5]

059 – 96 [5.9]

073 – 120 [7.3]

089 – 146 [8.9]

097 – 159 [9.7]

113 – 185 [11.3]

141 – 231 [14.1]

179 – 294 [17.9]

226 – 370 [22.6]

451 – 739 [45.1]†

†The H Series motors with the displacement code "**022**", "**035**", or "**451**" must also specify free running gerotor. (Option "**A**" in position **15**).

7, 8 Mounting Type

A – 2 Bolt (Standard) 82.50 [3.248] Dia. x 3.05 [.120] Pilot, 13.59 [.535] Dia. Mounting Holes on 106.35 [4.187] Dia. B.C.

BA – 4 Bolt (Standard) 44.40 [1.748] Dia. x 3.05 [.120] Pilot, .375-16 UNC-2B Mounting Holes on 82.55 [3.250] Dia. B.C.

CA – 2 Bolt (Standard) 82.50 [3.248] Dia. x 6.10 [.240] Pilot, 10.41 [.410] Dia. Mounting Holes on 106.35 [4.187] Dia. B.C. (SAE A)

DD – 2 Bolt (Standard) 101.60 [4.000] Dia. x 6.10 [.240] Pilot, 14.35 [.565] Dia. Mounting Holes on 146.05 [5.750] Dia. B.C. (SAE B)

FA – 4 Bolt (Standard) 44.40 [1.748] Dia. x 3.05 [.120] Pilot, M10 x 1.5-6H Mounting Holes on 82.55 [3.250] Dia. B.C.

MA - 2 Bolt (Standard) 82.50 [3.248] Dia. x 8.13 [.320] Pilot, 13.59 [.535] Dia. Mounting Holes on 106.35 [4.187] Dia. B.C., w/o O-ring Groove

9, 10 Output Shaft

01 – 25.4 [1.00] Dia. Straight, Woodruff Key, .250-20 UNC-2B Hole in Shaft End

02 – 25.4 [1.00] Dia. SAE 6B Spline, .250-20 UNC-2B Hole in Shaft End

07 – 25.4 [1.00] Dia. Straight, 8.03 [.316] Dia. Cross Hole 11.2 [.44] from End, 5.6 [.22] Extra Length

08 – 25.4 [1.00] Dia. Straight, 10.31 [.406] Dia. Cross Hole 15.7 [.62] from End, .250-20 UNC-2B Hole in Shaft End

16 – 22.22 [.875] Dia. SAE 13 Tooth Spline (SAE B)

17 – 22.22 [.875] Dia. Straight, 6.4 [.25] x 19.0 [.75] Square Key (SAE B)

18 – 25.4 [1.00] Dia. Tapered, Woodruff Key and Nut, 34.92 [1.375] Taper Length

24 – 25.00 [.984] Dia. Straight, 8.00 [.315] KEY, M8 x 1.25-6H Hole in Shaft End

39 - 25.00 [.984] Dia. Straight (k6), 8.00 [.315] Key, M8 x 1.25-6H Hole in Shaft End

11, 12 Ports

AA – .875-14 UNF-2B SAE O-Ring Ports

AB – .500-14 NPTF Dry Seal Pipe Thread Ports

AC – Manifold Ports (.3125-18 UNC-2B Mounting Holes)

AD – Manifold Ports (M8 x 1.25-6H Mounting Holes)

AF – G 1/2 BSP Straight Thread Ports

EB†† – End Ports: .750-16 UNF-2B SAE O-Ring Ports

EC†† – End Ports: G 1/2 BSP Straight Thread Ports

†† Note: End ported motor pressure is derated. Reference page B-2-2 for ratings.

13, 14 Case Flow Options

00 – None

01 – .4375-20 UNF-2B SAE O-Ring Port (End Cap)

02 – G 1/4 BSP Straight THD Port (End Cap)

03 – Manifold case drain

04 – .4375-20 UNF-2B SAE O-ring port (side of housing)

05 – .3125-24 UNF-2B SAE O-ring port (mounting flange)

11 – Internal Check Valves

15 Gerotor Options

0 – None

A – Free Running

16 Shaft Options

0 – None

N – Electroless Nickel Plated

17, 18 Seal Options

00 – Standard Seals

02 – Seal Guard

03 – Viton Seals

04 – Viton Shaft Seal

07 - High Pressure Shaft Seal

11 – High pressure shaft seal, slinger seal

19 – Extreme duty seal guard

19, 20 Speed Sensor Options

00 – None

AA – 12mm digital speed pickup (15 pulse) without lead wire

AB – Magnetic Speed Pickup (60 Pulse by Quadrature), No Lead Wire with M12 Connector (A=Power, B=Common, C=Signal)

21, 22 Valve Options

00 – None

***** – Contact your Eaton Sales Representative for available options.

23, 24 Special Features (Hardware)

00 – None

AB – Low Speed Valving

SS – Stainless Steel Flange Bolts

25 Special Assembly Instructions

0 – None

1 – Reverse Rotation

2 – Flange Rotated 90°

26, 27 Paint/ Special Packaging

00 – No Paint

AA – Low Gloss Black Primer

AD – Environmental Coated Gloss White

AF – Environmental Coated Black

28, 29 Eaton Assigned Code when Applicable

00 – Assigned Code

30 Eaton Assigned Design Code

J – Nine (9)

Feature in **bold** are preferred and allow for shorter lead time.

Notes

S Series (103-)

Highlights

New, improved design!

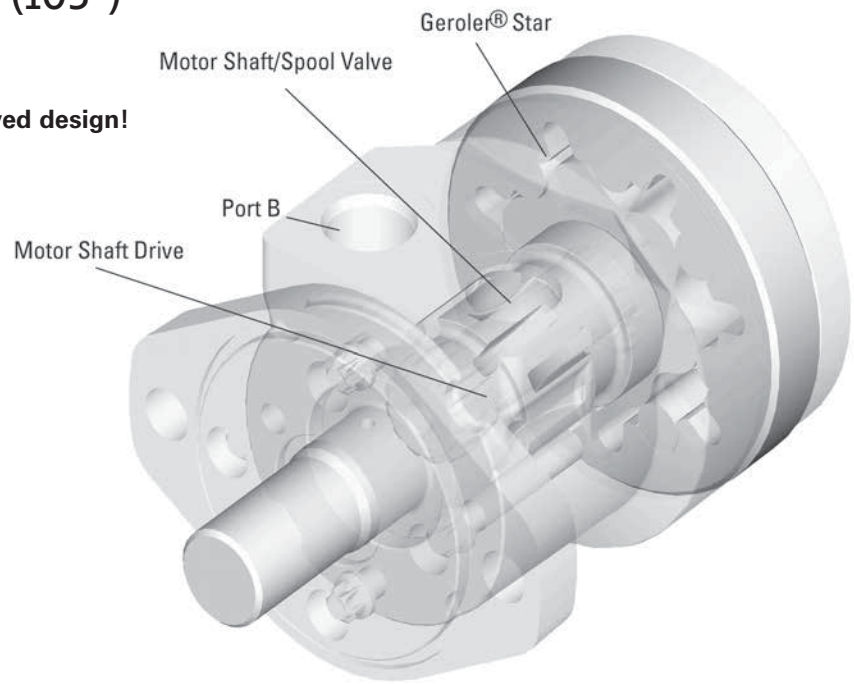

Description

The new improved Char-Lynn S Series motors with optimized Geroler geometry offers enhanced performance with reduced drive-running angle while retaining the overall package size of the original S series. Design improvements include upgraded steel end cap, O-Ring section seals, and optimized Geroler set. The Geroler set has precision-machined rollers in the outer ring which provide support with rolling contact between the star and ring. This improves mechanical efficiency, especially at start-up and at low speed conditions. Improvements incorporated into the latest S Series motor provide reliable leak-free performance and smooth operation at start-up conditions.

Specifications

Geroler Element	10 Displacements
Flow l/min [GPM]	55 [15] Continuous***
	75 [20] Intermittent**
Speed	Up to 963 RPM
Pressure bar [PSI]	135 [2000] Cont.***
	170 [2500] Inter.**
Torque Nm [lb-in]	528 [4672] Cont.***
	587 [5190] Inter.**

*** Continuous— (Cont.) Continuous rating, motor may be run continuously at these ratings.
** Intermittent— (Inter.) Intermittent operation, 10% of every minute.

Features:

- Constant clearance Geroler, design
- Three moving components (gerotor, drive, shaft)
- Optimized drive running angle
- Three-zone pressure design (inlet, return and case)
- Variety of displacements, shafts and mounts
- Special options to meet customer needs!

Benefits:

- High efficiency
- Smooth low speed operation!
- Extended motor life
- Design flexibility
- Ability to optimize designs for your application needs
- Extended leak-free performance

Applications:

- Agricultural augers, harvesters, seeders
- Car wash brushes
- Food processing
- Railroad maintenance equipment
- Machine tools
- Conveyors
- Industrial sweepers and floor polishers
- Saw mill works
- Turf equipment
- Concrete and asphalt equipment
- Skid steer attachments
- Many more


Conveyor


Casting


Amusement ride


Combine

S Series (103-)

Specifications

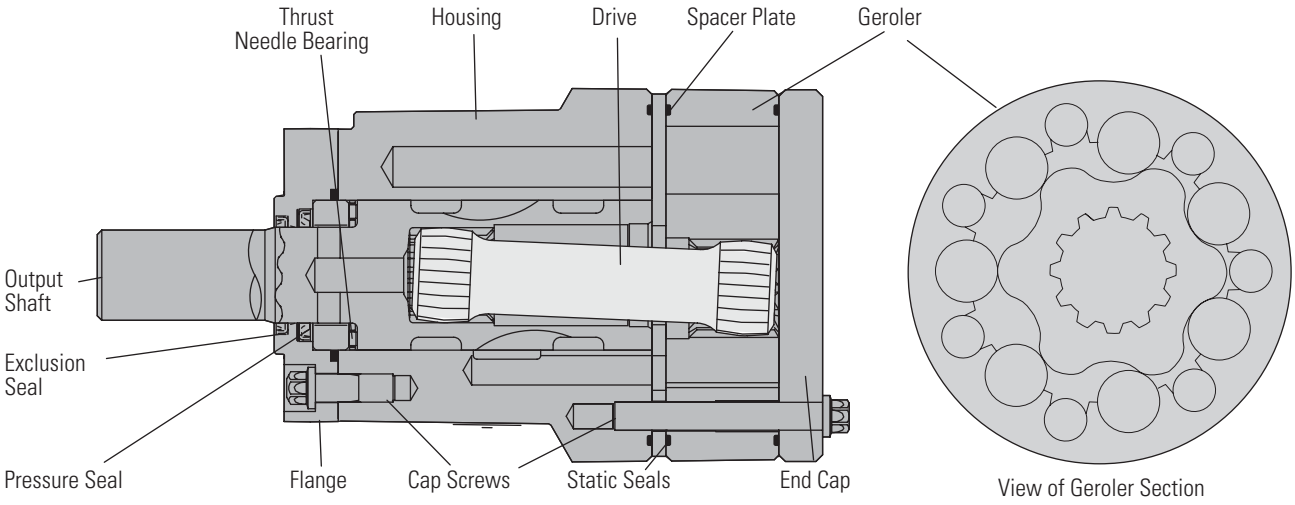

SPECIFICATION DATA — S MOTORS

Displ. cm^3/r [in^3/r]		59 [3.6]	75 [4.6]	97 [5.7]	120 [7.3]	144 [8.8]	166 [10.1]	187 [11.4]	225 [13.7]	298 [18.2]	372 [22.7]
Max. Speed (RPM)	@ Continuous Flow	963	792	607	472	394	343	304	253	190	153
Flow LPM [GPM]	Continuous	57 [15]	57 [15]	57 [15]	57 [15]	57 [15]	57 [15]	57 [15]	57 [15]	57 [15]	57 [15]
	Intermittent	68 [18]	76 [20]	76 [20]	76 [20]	76 [20]	76 [20]	76 [20]	76 [20]	76 [20]	76 [20]
Torque Nm [lb-in]	Continuous	115 [1021]	150 [1325]	183 [1623]	237 [2010]	265 [2347]	301 [2662]	333 [2950]	372 [3290]	491 [4345]	528 [4672]
	Intermittent	144 [1271]	186 [1649]	225 [1992]	292 [2582]	324 [2870]	360 [3191]	399 [3533]	434 [3843]	505 [4467]	587 [5200]
Min. Starting Torque Nm[lb-in]	@ Cont. Pressure	90 [800]	113 [1000]	148 [1310]	184 [1630]	212 [2050]	232 [2330]	263 [2670]	302 [2990]	338 [3270]	369 [3270]
	@ Int. Pressure	116 [1030]	146 [1290]	190 [1680]	236 [2090]	271 [2400]	289 [2560]	329 [2910]	374 [3310]	417 [3690]	438 [3880]
Pressure Δ Bar [Δ PSI]	Continuous	138 [2000]	138 [2000]	138 [2000]	138 [2000]	131 [1900]	131 [1900]	128 [1850]	117 [1700]	103 [1500]	90 [1300]
	Intermittent	172 [2500]	172 [2500]	172 [2500]	172 [2500]	162 [2350]	159 [2300]	155 [2250]	141 [2050]	124 [1800]	103 [1500]

A simultaneous maximum torque and maximum speed NOT recommended.

Note:

To assure best motor life, run motor for approximately one hour at 30% of rated pressure before application to full load. Be sure motor is filled with fluid prior to any load applications.

Maximum Inlet Pressure:

172 Bar [2500 PSI] without regard to Δ Bar [Δ PSI] and/or back pressure ratings or combination thereof.

6B Splined or Tapered shafts are recommended whenever operating above 282 NM [2500 lb-in] of torque, especially for those applications subject to frequent reversals.

Δ Pressure:

The true Δ bar [Δ PSI] between inlet port and outlet port

Continuous Rating:

Motor may be run continuously at these ratings

Intermittent Operation:

10% of every minute

Recommended Fluids:

Premium quality, anti-wear type hydraulic oil with a viscosity of not less than 70 SUS at operating temperature.

Recommended System Operating Temp.:

-34°C to 82°C [-30°F to 180°F]

Recommended Filtration:

per ISO Cleanliness Code 4406, level 20/18/13

S Series (103-)

Performance Data

Motors run with high efficiency in all areas designated with a number for torque and speed, however for best motor life select a motor to run with a torque and speed range printed in the light shaded area.

Performance data is typical at 120 SUS. Actual data may vary slightly from unit to unit in production

Continuous

Intermittent

S Motor 59 cm³/r [3.6 in³/r]

Δ Pressure Bar [PSI]

Flow LPM [GPM]

	[200] **14**	[400] **28**	[600] **41**	[800] **55**	[1000] **69**	[1200] **83**	[1400] **97**	[1600] **110**	[1800] **124**	[2000] **138**	[2500] **172**
[2]	86	190	292	390	484	578	662	729	764	803	
	10	*22*	*33*	*44*	*55*	*65*	*75*	*82*	*86*	*91*	
7,6	**126**	**121**	**115**	**107**	**97**	**85**	**75**	**63**	**45**	**24**	
[4]	79	185	289	395	498	600	702	804	903	998	1156
	9	*21*	*33*	*45*	*56*	*68*	*79*	*91*	*102*	*113*	*131*
15,1	**256**	**250**	**243**	**235**	**224**	**212**	**199**	**183**	**166**	**147**	**89**
[6]	71	177	280	387	495	602	704	808	909	1011	1257
	8	*20*	*32*	*44*	*56*	*68*	*80*	*91*	*103*	*114*	*142*
22,7	**383**	**377**	**369**	**360**	**349**	**336**	**320**	**302**	**284**	**266**	**207**
[8]	62	166	274	379	488	594	699	806	907	1007	1264
	7	*19*	*31*	*43*	*55*	*67*	*79*	*91*	*102*	*114*	*143*
30,3	**514**	**508**	**500**	**490**	**477**	**464**	**448**	**430**	**409**	**390**	**333**
[10]	52	155	264	369	475	583	686	793	897	1000	1257
	6	*17*	*30*	*42*	*54*	*66*	*78*	*90*	*101*	*113*	*142*
37,9	**642**	**635**	**628**	**617**	**605**	**591**	**575**	**557**	**538**	**517**	**461**
[12]	38	141	248	354	462	568	674	777	884	987	1244
	4	*16*	*28*	*40*	*52*	*64*	*76*	*88*	*100*	*111*	*141*
45,4	**772**	**764**	**757**	**747**	**736**	**722**	**706**	**687**	**670**	**648**	**592**
[14]	21	125	231	337	445	551	658	763	868	972	1233
	2	*14*	*26*	*38*	*50*	*62*	*74*	*86*	*98*	*110*	*139*
53,0	**900**	**893**	**885**	**876**	**866**	**852**	**836**	**819**	**798**	**778**	**721**
[15]	8	116	223	328	434	543	648	756	862	965	1225
	1	*13*	*25*	*37*	*49*	*61*	*73*	*85*	*97*	*109*	*138*
56,8	**482**	**958**	**949**	**940**	**929**	**915**	**900**	**882**	**863**	**842**	**784**
[18]		86	191	296	403	511	617	726	831	935	1195
		10	*22*	*33*	*46*	*58*	*70*	*82*	*94*	*106*	*135*
68,1		**1151**	**1139**	**1128**	**1117**	**1105**	**1090**	**1074**	**1054**	**1033**	**977**

S Motor 75 cm³/r [4.6 in³/r]

Δ Pressure Bar [PSI]

Flow LPM [GPM]

	[200] **14**	[400] **28**	[600] **41**	[800] **55**	[1000] **69**	[1200] **83**	[1400] **97**	[1600] **110**	[1800] **124**	[2000] **138**	[2500] **172**
[2]	91	218	343	467	590	708	815	900	981	1086	
	10	*25*	*39*	*53*	*67*	*80*	*92*	*102*	*111*	*123*	
7,6	**93**	**89**	**81**	**75**	**66**	**59**	**43**	**21**	**23**	**16**	
[4]	87	217	352	484	616	748	874	1001	1123	1236	1472
	10	*25*	*40*	*55*	*70*	*85*	*99*	*113*	*127*	*140*	*166*
15,1	**193**	**188**	**181**	**173**	**163**	**150**	**139**	**125**	**107**	**89**	**37**
[6]	82	219	355	492	627	763	898	1027	1155	1284	1590
	9	*25*	*40*	*56*	*71*	*86*	*101*	*116*	*131*	*145*	*180*
22,7	**292**	**286**	**277**	**269**	**258**	**244**	**228**	**214**	**202**	**186**	**140**
[8]	69	202	341	481	619	761	896	1032	1165	1296	1618
	8	*23*	*38*	*54*	*70*	*86*	*101*	*117*	*132*	*146*	*183*
30,3	**390**	**384**	**375**	**364**	**355**	**342**	**326**	**309**	**295**	**276**	**230**
[10]	56	193	330	471	610	751	887	1025	1162	1297	1628
	6	*22*	*37*	*53*	*69*	*85*	*100*	*116*	*131*	*147*	*184*
37,9	**489**	**484**	**476**	**467**	**457**	**444**	**431**	**416**	**399**	**381**	**336**
[12]	39	175	315	453	595	736	873	1011	1148	1284	1617
	4	*20*	*36*	*51*	*67*	*83*	*99*	*114*	*130*	*145*	*183*
45,4	**587**	**582**	**573**	**564**	**552**	**540**	**526**	**510**	**494**	**476**	**427**
[14]	12	153	290	431	571	716	856	993	1129	1265	1605
	1	*17*	*33*	*49*	*65*	*81*	*97*	*112*	*128*	*143*	*181*
53,0	**343**	**680**	**673**	**665**	**654**	**641**	**628**	**613**	**594**	**578**	**533**
[15]	9	143	281	424	567	708	846	985	1121	1259	1599
	1	*16*	*32*	*48*	*64*	*80*	*96*	*111*	*127*	*142*	*181*
56,8	**491**	**729**	**723**	**714**	**704**	**690**	**675**	**661**	**644**	**628**	**580**
[20]		82	220	362	505	645	784	922	1061	1200	1545
		9	*25*	*41*	*57*	*73*	*89*	*104*	*120*	*136*	*175*
75,7		**970**	**963**	**957**	**948**	**935**	**921**	**906**	**888**	**871**	**825**

[143] Torque [lb-in]
16 } Nm
729 Speed RPM

S Series (103-)

Performance Data

Motors run with high efficiency in all areas designated with a number for torque and speed, however for best motor life select a motor to run with a torque and speed range printed in the light shaded area.

Performance data is typical at 120 SUS. Actual data may vary slightly from unit to unit in production

Continuous

Intermittent

S Motor 93 cm^3/r [5.7 in^3/r]

Δ Pressure Bar [PSI]

Flow LPM [GPM]

	[200] **14**	[400] **28**	[600] **41**	[800] **55**	[1000] **69**	[1200] **83**	[1400] **97**	[1600] **110**	[1800] **124**	[2000] **138**	[2500] **172**
[2]	146	308	466	620	771	913	1031	1086	1176	1281	
	16	*35*	*53*	*70*	*87*	*103*	*116*	*123*	*133*	*145*	
7,6	**76**	**72**	**64**	**55**	**48**	**34**	**22**	**7**	**4**	**1**	
[4]	136	301	466	633	797	959	1116	1275	1430	1570	1798
	15	*34*	*53*	*72*	*90*	*108*	*126*	*144*	*162*	*177*	*203*
15,1	**158**	**153**	**146**	**138**	**126**	**115**	**103**	**90**	**77**	**59**	**17**
[6]	113	278	446	616	786	952	1116	1280	1444	1603	1971
	13	*31*	*50*	*70*	*89*	*108*	*126*	*145*	*163*	*181*	*223*
22,7	**238**	**232**	**225**	**215**	**206**	**191**	**175**	**161**	**145**	**129**	**87**
[8]	98	262	431	604	777	947	1112	1279	1446	1610	2006
	11	*30*	*49*	*68*	*88*	*107*	*126*	*144*	*163*	*182*	*227*
30,3	**319**	**313**	**306**	**296**	**284**	**270**	**255**	**240**	**224**	**208**	**165**
[10]	81	246	415	590	763	935	1100	1271	1439	1604	2012
	9	*28*	*47*	*67*	*86*	*106*	*124*	*144*	*163*	*181*	*227*
37,9	**400**	**394**	**388**	**378**	**366**	**353**	**340**	**324**	**306**	**288**	**244**
[12]	65	232	401	574	746	916	1081	1255	1425	1591	2001
	7	*26*	*45*	*65*	*84*	*103*	*122*	*142*	*161*	*180*	*226*
45,4	**481**	**476**	**469**	**460**	**448**	**435**	**423**	**408**	**394**	**374**	**326**
[14]	42	207	376	552	721	893	1064	1235	1405	1570	1983
	5	*23*	*43*	*62*	*81*	*101*	*120*	*140*	*159*	*177*	*224*
53,0	**561**	**557**	**549**	**541**	**531**	**519**	**504**	**489**	**470**	**455**	**412**
[15]	31	196	364	538	708	881	1052	1223	1391	1560	1974
	4	*22*	*41*	*61*	*80*	*100*	*119*	*138*	*157*	*176*	*223*
56,8	**602**	**597**	**591**	**582**	**571**	**559**	**546**	**530**	**514**	**498**	**453**
[20]		119	290	461	633	807	976	1145	1315	1485	1904
		13	*33*	*52*	*72*	*91*	*110*	*129*	*149*	*168*	*215*
75,7		**799**	**792**	**785**	**775**	**762**	**748**	**734**	**717**	**702**	**660**

S Motor 120 cm^3/r [7.3 in^3/r]

Δ Pressure Bar [PSI]

Flow LPM [GPM]

	[200] **14**	[400] **28**	[600] **41**	[800] **55**	[1000] **69**	[1200] **83**	[1400] **97**	[1600] **110**	[1800] **124**	[2000] **138**	[2500] **172**
[2]	191	403	605	801	978	1146	1288	1440	1552	1679	
	22	*46*	*68*	*91*	*110*	*129*	*146*	*163*	*175*	*190*	
7,6	**60**	**56**	**50**	**43**	**36**	**29**	**19**	**15**	**8**	**6**	
[4]	188	403	617	829	1031	1236	1438	1632	1816	1990	1914
	21	*46*	*70*	*94*	*117*	*140*	*162*	*184*	*205*	*225*	*216*
15,1	**122**	**118**	**112**	**106**	**98**	**87**	**78**	**67**	**56**	**49**	**16**
[6]	172	391	607	821	1030	1241	1449	1654	1858	2056	2522
	19	*44*	*69*	*93*	*116*	*140*	*164*	*187*	*210*	*232*	*285*
22,7	**186**	**180**	**175**	**167**	**159**	**149**	**137**	**126**	**114**	**103**	**73**
[8]	156	375	593	807	1015	1229	1439	1648	1855	2059	2557
	18	*42*	*67*	*91*	*115*	*139*	*163*	*186*	*210*	*233*	*289*
30,3	**249**	**244**	**237**	**229**	**220**	**210**	**199**	**185**	**174**	**162**	**128**
[10]	130	349	567	785	995	1210	1420	1630	1838	2045	2559
	15	*39*	*64*	*89*	*112*	*137*	*160*	*184*	*208*	*231*	*289*
37,9	**311**	**307**	**301**	**293**	**286**	**275**	**264**	**252**	**239**	**227**	**193**
[12]	103	320	539	756	965	1175	1383	1593	1799	2003	2500
	12	*36*	*61*	*85*	*109*	*133*	*156*	*180*	*203*	*226*	*282*
45,4	**374**	**369**	**363**	**355**	**346**	**336**	**327**	**314**	**303**	**288**	**253**
[14]	70	285	502	715	923	1131	1335	1540	1745	1948	2452
	8	*32*	*57*	*81*	*104*	*128*	*151*	*174*	*197*	*220*	*277*
53,0	**437**	**433**	**427**	**419**	**411**	**402**	**391**	**379**	**369**	**355**	**322**
[15]	54	267	485	705	913	1122	1329	1540	1746	1947	2441
	6	*30*	*55*	*80*	*103*	*127*	*150*	*174*	*197*	*220*	*276*
56,8	**469**	**465**	**459**	**452**	**444**	**433**	**423**	**411**	**400**	**386**	**349**
[20]		159	377	600	815	1026	1232	1444	1651	1859	2383
		18	*43*	*68*	*92*	*116*	*139*	*163*	*186*	*210*	*269*
75,7		**621**	**618**	**612**	**603**	**594**	**583**	**571**	**560**	**549**	**515**

[267] Torque [lb-in]
30 } Nm
465 Speed RPM

S Series (103-)

Performance Data

Motors run with high efficiency in all areas designated with a number for torque and speed, however for best motor life select a motor to run with a torque and speed range printed in the light shaded area.

Performance data is typical at 120 SUS. Actual data may vary slightly from unit to unit in production

Continuous

Intermittent

S Motor 144 cm³/r [8.8 in³/r]

Δ Pressure Bar [PSI]

Flow LPM [GPM]

	[200] **14**	[400] **28**	[600] **41**	[800] **55**	[1000] **69**	[1200] **83**	[1400] **97**	[1600] **110**	[1800] **124**	[1900] **138**	[2350] **172**
[2]	222	480	729	967	1190	1402	1591	1786	2031	2107	
	25	*54*	*82*	*109*	*134*	*158*	*180*	*202*	*229*	*238*	
7,6	**49**	**45**	**40**	**34**	**29**	**21**	**17**	**13**	**14**	**14**	
[4]	217	475	728	987	1237	1488	1727	1957	2181	2292	2310
	24	*54*	*82*	*112*	*140*	*168*	*195*	*221*	*246*	*259*	*261*
15,1	**101**	**97**	**91**	**84**	**77**	**69**	**61**	**52**	**45**	**42**	**22**
[6]	193	453	715	976	1234	1494	1746	1995	2239	2358	2867
	22	*51*	*81*	*110*	*139*	*169*	*197*	*225*	*253*	*266*	*324*
22,7	**153**	**149**	**143**	**136**	**128**	**119**	**110**	**101**	**91**	**86**	**66**
[8]	173	434	699	961	1218	1479	1735	1984	2235	2358	2894
	20	*49*	*79*	*109*	*138*	*167*	*196*	*224*	*252*	*266*	*327*
30,3	**205**	**202**	**195**	**187**	**179**	**170**	**160**	**150**	**139**	**134**	**109**
[10]	144	407	673	940	1197	1459	1715	1967	2218	2344	2890
	16	*46*	*76*	*106*	*135*	*165*	*194*	*222*	*251*	*265*	*327*
37,9	**259**	**254**	**247**	**240**	**231**	**221**	**211**	**202**	**191**	**185**	**158**
[12]	118	380	644	907	1167	1429	1685	1941	2194	2319	2878
	13	*43*	*73*	*102*	*132*	*161*	*190*	*219*	*248*	*262*	*325*
45,4	**312**	**307**	**301**	**294**	**286**	**277**	**267**	**257**	**246**	**241**	**217**
[14]	87	346	610	871	1131	1395	1651	1907	2163	2289	2851
	10	*39*	*69*	*98*	*128*	*158*	*187*	*215*	*244*	*259*	*322*
53,0	**363**	**359**	**354**	**346**	**339**	**330**	**319**	**309**	**299**	**293**	**266**
[15]	69	327	592	853	1113	1376	1633	1890	2146	2271	2835
	8	*37*	*67*	*96*	*126*	*156*	*185*	*214*	*242*	*257*	*320*
56,8	**389**	**386**	**380**	**372**	**364**	**355**	**344**	**336**	**323**	**317**	**289**
[20]		200	460	726	987	1251	1512	1770	2025	2153	2724
		23	*52*	*82*	*112*	*141*	*171*	*200*	*229*	*243*	*308*
75,7		**516**	**513**	**507**	**499**	**491**	**480**	**470**	**459**	**454**	**427**

S Motor 166 cm³/r [10.1 in³/r]

Δ Pressure Bar [PSI]

Flow LPM [GPM]

	[200] **14**	[400] **28**	[600] **41**	[800] **55**	[1000] **69**	[1200] **83**	[1400] **97**	[1600] **110**	[1800] **124**	[1900] **138**	[2300] **172**
[2]	267	563	841	1105	1364	1622	1852	2081	2288		
	30	*64*	*95*	*125*	*154*	*183*	*209*	*235*	*259*		
7,6	**43**	**39**	**35**	**30**	**27**	**21**	**16**	**13**	**13**		
[4]	247	544	838	1129	1418	1707	1988	2255	2514	2641	3116
	28	*61*	*95*	*128*	*160*	*193*	*225*	*255*	*284*	*298*	*352*
15,1	**89**	**85**	**80**	**74**	**68**	**60**	**53**	**47**	**41**	**38**	**28**
[6]	217	517	813	1108	1401	1700	1994	2281	2559	2692	3214
	25	*58*	*92*	*125*	*158*	*192*	*225*	*258*	*289*	*304*	*363*
22,7	**134**	**131**	**125**	**120**	**113**	**105**	**96**	**88**	**79**	**75**	**58**
[8]	195	494	794	1089	1387	1687	1983	2269	2552	2691	3239
	22	*56*	*90*	*123*	*157*	*191*	*224*	*256*	*288*	*304*	*366*
30,3	**180**	**176**	**171**	**164**	**156**	**147**	**138**	**128**	**118**	**114**	**96**
[10]	176	477	776	1072	1371	1668	1960	2249	2537	2676	3228
	20	*54*	*88*	*121*	*155*	*188*	*221*	*254*	*287*	*302*	*365*
37,9	**227**	**222**	**217**	**210**	**203**	**194**	**185**	**175**	**165**	**160**	**136**
[12]	136	436	737	1037	1335	1636	1928	2217	2509	2651	3210
	15	*49*	*83*	*117*	*151*	*185*	*218*	*251*	*284*	*300*	*363*
45,4	**272**	**269**	**264**	**258**	**249**	**241**	**233**	**223**	**214**	**208**	**186**
[14]	93	394	696	995	1296	1599	1890	2185	2475	2617	3178
	11	*44*	*79*	*112*	*146*	*181*	*214*	*247*	*280*	*296*	*359*
53,0	**318**	**315**	**310**	**303**	**296**	**287**	**279**	**269**	**259**	**254**	**230**
[15]	73	371	672	973	1272	1575	1867	2159	2453	2596	3158
	8	*42*	*76*	*110*	*144*	*178*	*211*	*244*	*277*	*293*	*357*
56,8	**341**	**338**	**333**	**326**	**319**	**309**	**300**	**290**	**280**	**274**	**253**
[20]		227	527	829	1128	1430	1724	2020	2313	2457	3030
		26	*60*	*94*	*127*	*162*	*195*	*228*	*261*	*278*	*342*
75,7		**452**	**449**	**443**	**435**	**426**	**417**	**407**	**396**	**390**	**366**

[371] Torque [lb-in]
42 } Nm
338 Speed RPM

S Series (103-)

Performance Data

Motors run with high efficiency in all areas designated with a number for torque and speed, however for best motor life select a motor to run with a torque and speed range printed in the light shaded area.

Performance data is typical at 120 SUS. Actual data may vary slightly from unit to unit in production

Continuous

Intermittent

S Motor 187 cm³/r [11.4 in³/r]

Δ Pressure Bar [PSI]

Flow LPM [GPM]

	[200] **14**	[400] **28**	[600] **41**	[800] **55**	[1000] **69**	[1200] **83**	[1400] **97**	[1600] **110**	[1800] **124**	[1850] **138**	[2250] **172**
[2]	298	627	944	1244	1532	1805	2030	2250	2478		
	34	*71*	*107*	*141*	*173*	*204*	*229*	*254*	*280*		
7,6	**37**	**34**	**31**	**25**	**22**	**18**	**10**	**9**	**7**		
[4]	298	640	969	1291	1607	1919	2219	2511	2799	2869	3411
	34	*72*	*109*	*146*	*182*	*217*	*251*	*284*	*316*	*324*	*385*
15,1	**78**	**75**	**70**	**65**	**60**	**53**	**47**	**41**	**35**	**33**	**19**
[6]	279	621	953	1283	1608	1930	2243	2551	2850	2922	3502
	32	*70*	*108*	*145*	*182*	*218*	*253*	*288*	*322*	*330*	*396*
22,7	**119**	**115**	**110**	**104**	**97**	**89**	**82**	**74**	**66**	**64**	**50**
[8]	252	593	928	1257	1579	1905	2224	2542	2855	2932	3539
	28	*67*	*105*	*142*	*178*	*215*	*251*	*287*	*323*	*331*	*400*
30,3	**160**	**156**	**151**	**144**	**137**	**129**	**120**	**110**	**101**	**99**	**78**
[10]	211	555	888	1217	1546	1872	2193	2516	2831	2909	3518
	24	*63*	*100*	*138*	*175*	*211*	*248*	*284*	*320*	*329*	*397*
37,9	**201**	**198**	**193**	**187**	**180**	**173**	**164**	**154**	**143**	**141**	**114**
[12]	162	502	835	1164	1490	1818	2139	2463	2780	2857	3476
	18	*57*	*94*	*131*	*168*	*205*	*242*	*278*	*314*	*323*	*393*
45,4	**243**	**240**	**235**	**229**	**222**	**214**	**206**	**196**	**184**	**181**	**154**
[14]	118	452	786	1117	1443	1772	2095	2417	2736	2814	3438
	13	*51*	*89*	*126*	*163*	*200*	*237*	*273*	*309*	*318*	*388*
53,0	**283**	**280**	**276**	**270**	**262**	**254**	**245**	**235**	**224**	**221**	**194**
[15]	91	425	759	1089	1418	1747	2068	2389	2708	2786	3410
	10	*48*	*86*	*123*	*160*	*197*	*234*	*270*	*306*	*315*	*385*
56,8	**304**	**301**	**296**	**290**	**283**	**274**	**265**	**256**	**243**	**240**	**214**
[20]		259	590	925	1255	1585	1907	2229	2552	2633	3265
		29	*67*	*105*	*142*	*179*	*216*	*252*	*288*	*297*	*369*
75,7		**403**	**400**	**394**	**387**	**379**	**370**	**359**	**347**	**344**	**319**

S Motor 225 cm³/r [13.7 in³/r]

Δ Pressure Bar [PSI]

Flow LPM [GPM]

	[200] **14**	[400] **28**	[600] **41**	[800] **55**	[1000] **69**	[1200] **83**	[1400] **97**	[1600] **110**	[1700] **124**	[2050] **138**
[2]	358	765	1139	1498	1842	2163	2474	2738	2894	
	40	*86*	*129*	*169*	*208*	*244*	*280*	*309*	*327*	
7,6	**32**	**29**	**27**	**23**	**20**	**16**	**12**	**10**	**8**	
[4]	367	774	1177	1577	1956	2325	2680	3022	3191	3753
	41	*87*	*133*	*178*	*221*	*263*	*303*	*341*	*361*	*424*
15,1	**66**	**63**	**60**	**55**	**50**	**46**	**40**	**34**	**31**	**23**
[6]	348	758	1161	1567	1960	2344	2716	3083	3264	3863
	39	*86*	*131*	*177*	*221*	*265*	*307*	*348*	*369*	*437*
22,7	**99**	**96**	**92**	**88**	**82**	**76**	**70**	**63**	**59**	**45**
[8]	313	721	1124	1529	1921	2312	2696	3073	3265	3894
	35	*81*	*127*	*173*	*217*	*261*	*305*	*347*	*369*	*440*
30,3	**133**	**132**	**127**	**123**	**117**	**111**	**104**	**96**	**92**	**76**
[10]	262	669	1069	1473	1859	2247	2627	2997	3184	3810
	30	*76*	*121*	*166*	*210*	*254*	*297*	*339*	*360*	*430*
37,9	**167**	**165**	**161**	**157**	**152**	**146**	**139**	**130**	**126**	**107**
[12]	203	609	1006	1400	1782	2160	2531	2912	3098	3721
	23	*69*	*114*	*158*	*201*	*244*	*286*	*329*	*350*	*420*
45,4	**202**	**199**	**196**	**191**	**186**	**180**	**173**	**165**	**160**	**141**
[14]	143	544	938	1324	1700	2079	2452	2824	3008	3639
	16	*62*	*106*	*150*	*192*	*235*	*277*	*319*	*340*	*411*
53,0	**236**	**233**	**230**	**225**	**219**	**214**	**207**	**199**	**194**	**177**
[15]	106	504	897	1281	1653	2027	2393	2761	2944	3576
	12	*57*	*101*	*145*	*187*	*229*	*270*	*312*	*333*	*404*
56,8	**253**	**251**	**248**	**243**	**237**	**231**	**224**	**215**	**211**	**192**
[20]		303	697	1091	1477	1854	2214	2581	2765	3399
		34	*79*	*123*	*167*	*210*	*250*	*292*	*312*	*384*
75,7		**336**	**334**	**330**	**325**	**318**	**312**	**304**	**298**	**282**

[504] Torque [lb-in]
57 Nm
251 Speed RPM

S Series (103-)

Performance Data

Motors run with high efficiency in all areas designated with a number for torque and speed, however for best motor life select a motor to run with a torque and speed range printed in the light shaded area.

Performance data is typical at 120 SUS. Actual data may vary slightly from unit to unit in production

Continuous

Intermittent

S Motor 298 cm³/r [18.2 in³/r]

Δ Pressure Bar [PSI]

Flow LPM [GPM]

	[200] **14**	[400] **28**	[600] **41**	[800] **55**	[1000] **69**	[1200] **83**	[1400] **97**	[1500] **110**	[1800] **124**
[2]	487	1009	1509	1991	2460	2931	3360	3577	4113
	55	*114*	*170*	*225*	*278*	*331*	*380*	*404*	*465*
7,6	**24**	**22**	**20**	**18**	**17**	**14**	**11**	**10**	**8**
[4]	498	1043	1576	2093	2597	3087	3567	3798	4500
	56	*118*	*178*	*236*	*293*	*349*	*403*	*429*	*508*
15,1	**49**	**47**	**45**	**41**	**38**	**34**	**31**	**29**	**25**
[6]	470	1017	1552	2080	2594	3097	3594	3835	4536
	53	*115*	*175*	*235*	*293*	*350*	*406*	*433*	*513*
22,7	**74**	**72**	**69**	**66**	**62**	**57**	**52**	**49**	**42**
[8]	423	967	1502	2031	2549	3062	3563	3807	4526
	48	*109*	*170*	*229*	*288*	*346*	*403*	*430*	*511*
30,3	**100**	**98**	**95**	**92**	**88**	**83**	**77**	**73**	**64**
[10]	357	901	1433	1961	2477	2989	3486	3730	4456
	40	*102*	*162*	*222*	*280*	*338*	*394*	*421*	*504*
37,9	**126**	**124**	**121**	**118**	**113**	**108**	**101**	**97**	**87**
[12]	287	826	1357	1884	2402	2917	3410	3652	4363
	32	*93*	*153*	*213*	*271*	*330*	*385*	*413*	*493*
45,4	**152**	**150**	**147**	**144**	**140**	**134**	**126**	**121**	**109**
[14]	199	733	1261	1786	2303	2818	3316	3561	4276
	22	*83*	*142*	*202*	*260*	*318*	*375*	*402*	*483*
53,0	**177**	**176**	**173**	**170**	**165**	**160**	**152**	**147**	**134**
[15]	154	688	1218	1742	2258	2771	3273	3518	4241
	17	*78*	*138*	*197*	*255*	*313*	*370*	*398*	*479*
56,8	**190**	**189**	**186**	**183**	**178**	**173**	**165**	**160**	**146**
[20]		418	945	1471	1986	2502	3004	3253	3997
		47	*107*	*166*	*224*	*283*	*339*	*368*	*452*
75,7		**253**	**251**	**248**	**244**	**239**	**231**	**226**	**212**

S Motor 372 cm³/r [22.7 in³/r]

Δ Pressure Bar [PSI]

Flow LPM [GPM]

	[200] **14**	[400] **28**	[600] **41**	[800] **55**	[1000] **69**	[1200] **83**	[1400] **97**	[1500] **110**
[2]	629	1287	1905	2501	3066	3624	3886	4370
	71	*145*	*215*	*283*	*346*	*409*	*439*	*494*
7,6	**19**	**18**	**16**	**14**	**13**	**11**	**9**	**7**
[4]	628	1304	1962	2600	3206	3799	4082	4642
	71	*147*	*222*	*294*	*362*	*429*	*461*	*525*
15,1	**40**	**38**	**36**	**34**	**30**	**27**	**25**	**23**
[6]	587	1261	1926	2578	3203	3813	4112	4687
	66	*142*	*218*	*291*	*362*	*431*	*465*	*530*
22,7	**60**	**59**	**56**	**54**	**50**	**45**	**43**	**38**
[8]	529	1201	1867	2518	3148	3769	4072	4657
	60	*136*	*211*	*285*	*356*	*426*	*460*	*526*
30,3	**81**	**79**	**77**	**75**	**71**	**66**	**64**	**58**
[10]	451	1124	1779	2429	3056	3678	3983	4583
	51	*127*	*201*	*274*	*345*	*416*	*450*	*518*
37,9	**102**	**100**	**98**	**96**	**92**	**86**	**84**	**78**
[12]	359	1030	1688	2333	2963	3587	3889	4482
	41	*116*	*191*	*264*	*335*	*405*	*439*	*506*
45,4	**122**	**121**	**119**	**117**	**113**	**107**	**104**	**98**
[14]	256	922	1577	2226	2864	3487	3787	4381
	29	*104*	*178*	*252*	*324*	*394*	*428*	*495*
53,0	**143**	**142**	**140**	**137**	**134**	**128**	**126**	**119**
[15]	199	862	1514	2167	2797	3424	3727	4322
	22	*97*	*171*	*245*	*316*	*387*	*421*	*488*
56,8	**153**	**152**	**150**	**148**	**144**	**138**	**135**	**129**
[20]		534	1187	1832	2470	3093	3402	4004
		60	*134*	*207*	*279*	*349*	*384*	*452*
75,7		**204**	**202**	**200**	**197**	**192**	**189**	**183**

[862] Torque [lb-in]
97 Nm
152 Speed RPM

S Series (103-)

Dimensions

(Refer to pages B-4-19 thru B-4-22 for shaft and port dimensions.)

Ports

7/8-14 SAE O-Ring

6-1/2 (BSP) Straight thread manifold

Standard Rotation Viewed from Shaft End

Port A Pressurized — CW

Port B Pressurized — CCW

2 Bolt Flange

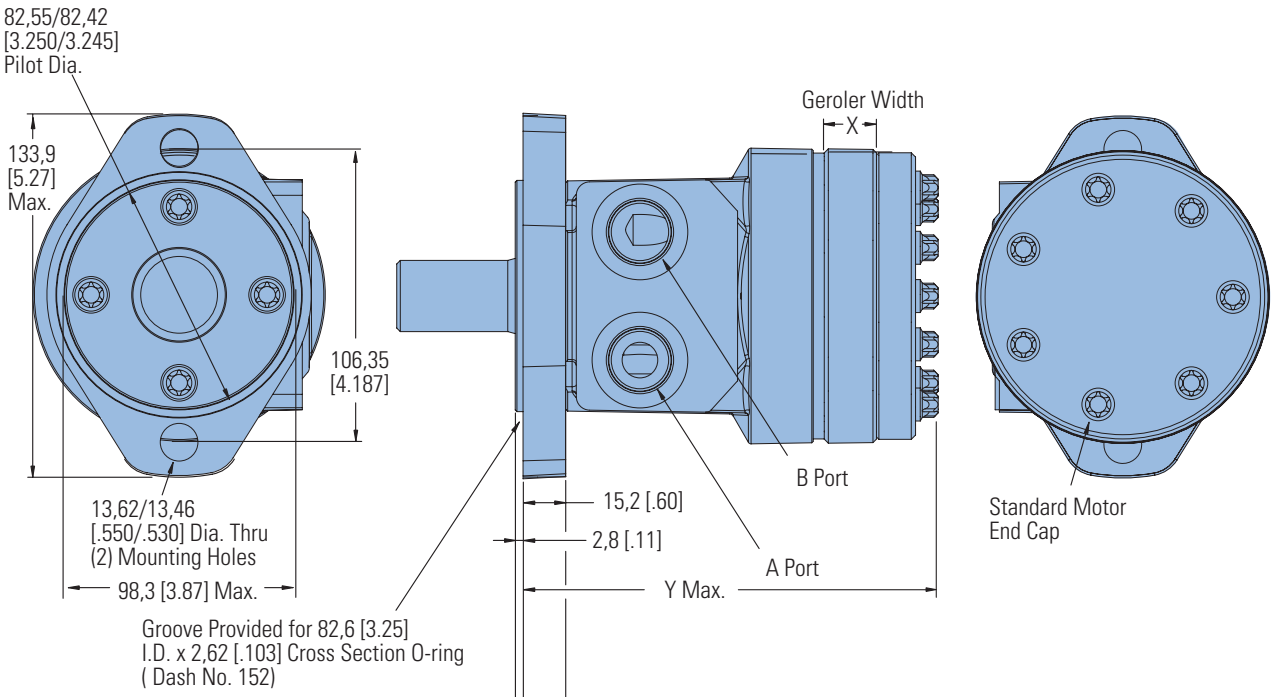

4 Bolt Flange

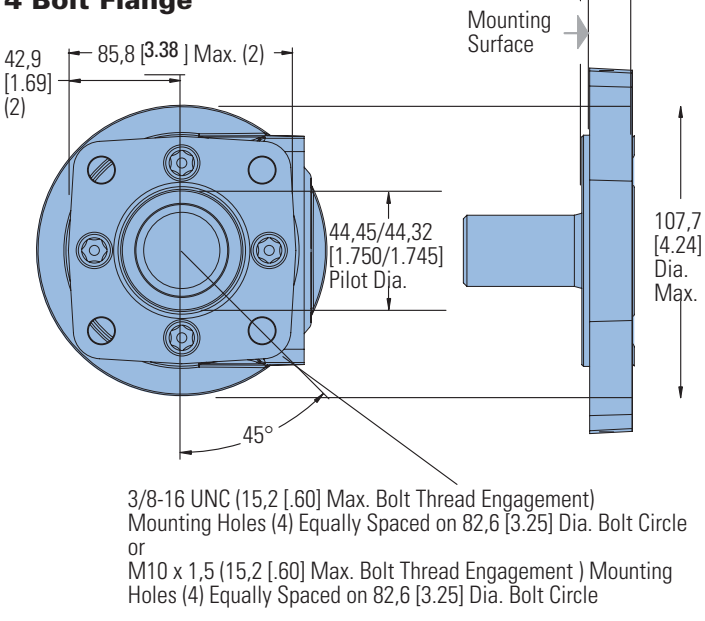

Displacement cm^3/r [in^3/r]	X mm [inch]	Y mm [inch]
58 [3.6]	7,5 [.30]	138,0 [5.43]
76 [4.6]	9,8 [.39]	140,3 [5.52]
93 [5.7]	12,0 [.47]	142,5 [5.61]
120 [7.3]	15,5 [.61]	146,0 [5.75]
144 [8.8]	18,6 [.73]	149,1 [5.87]
165 [10.1]	21,3 [.84]	151,8 [5.98]
186 [11.4]	24,0 [.94]	154,5 [6.08]
225 [13.7]	28,9 [1.14]	159,4 [6.28]
299 [18.2]	38,5 [1.52]	169,0 [6.66]
371 [22.7]	47,9 [1.88]	178,4 [7.02]

S Series (103-)

Product Numbers

Use three-digit prefix (103-) plus four-digit number from charts for complete product number (ex: 103-1093). Orders will not be accepted without the three-digit prefix.

2 Bolt Flange

SHAFT	PORT SIZE	DISPL. cm^3/r [in^3/r] / PRODUCT NUMBER									
		59 [3.6]	75 [4.6]	93 [5.7]	120 [7.3]	144 [8.8]	166 [10.1]	187 [11.4]	225 [13.7]	298 [18.2]	372 [22.7]
1 in. Straight w/Woodruff Key	7/8-14 O-Ring	103-1537	-1034	-1035	-1538	-1539	-1036	-1037	-1038	-1039	-1040
	1/2 NPTF	103-1540	-1026	-1027	-1541	-1542	-1028	-1029	-1030	-1031	-1032
	Manifold	103-1543	-1042	-1043	-1544	-1545	-1044	-1045	-1046	-1047	-1048
1 in. SAE 6B Splined	7/8-14 O-Ring	103-1552	-1082	-1083	-1553	-1554	-1084	-1085	-1086	-1087	-1088
	1/2 NPTF	103-1555	-1074	-1075	-1556	-1557	-1076	-1077	-1078	-1079	-1080
	Manifold	103-1558	-1090	-1091	-1559	-1560	-1092	-1093	-1094	-1095	-1096

103-1093

4 Bolt Flange

SHAFT	PORT SIZE	DISPL. cm^3/r [in^3/r] / PRODUCT NUMBER									
		59 [3.6]	75 [4.6]	93 [5.7]	120 [7.3]	144 [8.8]	166 [10.1]	187 [11.4]	225 [13.7]	298 [18.2]	372 [22.7]
1 in. Straight w/Woodruff Key	7/8-14 O-Ring	103-1570	-1010	-1011	-1571	-1572	-1012	-1013	-1014	-1015	-1016
	1/2 NPTF	103-1573	-1002	-1003	-1574	-1575	-1004	-1005	-1006	-1007	-1008
	Manifold	103-1576	-1018	-1019	-1577	-1578	-1020	-1021	-1022	-1023	-1024
1 in. SAE 6BSplined	7/8-14 O-Ring	103-1579	-1058	-1059	-1580	-1581	-1060	-1061	-1062	-1063	-1064
	1/2 NPTF	103-1582	-1050	-1051	-1583	-1584	-1052	-1053	-1054	-1055	-1056
	Manifold	103-1585	-1066	-1067	-1586	-1587	-1068	-1069	-1070	-1071	-1072

103-1069

S Series Motors with Corrosion Protection

SHAFT	MOUNTING	PORT SIZE	DISPL. cm^3/r [in^3/r] / PRODUCT NUMBER									
			59 [3.6]	75 [4.6]	93 [5.7]	120 [7.3]	144 [8.8]	166 [10.1]	187 [11.4]	225 [13.7]	298 [18.2]	372 [22.7]
1 in. Straight w/ Woodruff Key	2 Bolt Flange	7/8-14 O-Ring	103-1645	–	–	–	–	–	–	-1649	–	-1650
	4 Bolt Flange	1/2 NPTF	–	–	–	–	–	–	–	-1620	–	-1621

*Manifold product numbers shown are for motors with four 5/16 z-18 port face mounting threads. Manifold, manifold mounting O-Rings and bolts are NOT included.

For S Series Motors with a configuration Not Shown in the charts above: Use the model code number system on page B-3-11 to specify the product in detail.

S Series with Low Speed Valving

Product Number

Motors with the low speed valving option enable very smooth low speed operation while maintaining high torque.

Designed to run continuously at up to 200 RPM at standard rated pressures and reduced flows, this option provides smooth operation at low speeds. Furthermore, they resist slippage and have more momentary load holding ability than the standard H and S Series motors. Motors with this valving are not intended for low pressure applications (A minimum of 300 psi delta must be maintained between A port pressure and case pressure). Shaft side / radial load ratings are not affected by this valving.

Use digit prefix—103- plus four digit number from charts for complete product number—Example: 103-2678.

Orders will not be accepted without the three-digit prefix.

2 Bolt Flange

SHAFT	PORT SIZE	DISPL. cm^3/r [in^3/r] / PRODUCT NUMBER									
		59 [3.6]	75 [4.6]	93 [5.7]	120 [7.3]	144 [8.8]	166 [10.1]	187 [11.4]	225 [13.7]	298 [18.2]	372 [22.7]
1 in. Straight w/Woodruff Key	7/8 -14 O-Ring	103- —	-1427	-1428	—	—	-1429	-1430	-1431	-1432	-1433
	1/2 NPTF	103- —	-1419	-1420	—	—	-1421	-1422	-1423	-1424	-1425
	Manifold*	103- —	—	—	—	—	—	—	—	—	—
1 in. SAE 6B Splined	7/8 -14 O-Ring	103- —	-1525	—	—	-2692	—	—	-1675	—	—
	1/2 NPTF	103- —	—	-1634	—	—	—	—	—	—	—
	Manifold*	103- —	-1522	-2678	—	—	—	—	—	—	-1527

4 Bolt Flange

SHAFT	PORT SIZE	DISPL. cm^3/r [in^3/r] / PRODUCT NUMBER										
		59 [3.6]	75 [4.6]	93 [5.7]	120 [7.3]	144 [8.8]	166 [10.1]	187 [11.4]	225 [13.7]	298 [18.2]	372 [22.7]	
1 in. Straight w/Woodruff Key	7/8 -14 O-Ring		103-1625	-1410	-1411	-1626	-2531	-1412	-1413	-1414	-1415	-1416
	1/2 NPTF	103-1644	-1402	-1403	—	—	-1404	-1405	-1406	-1407	-1408	



*Manifold product numbers shown are for motors with four 5/16 -18 port face mounting threads. Manifold, manifold mounting O-Rings and bolts are NOT included.

For S Series Motors with Low Speed Valving Not Shown in the chart above: Use the model code number system on page B-3-11 to specify the product in detail.

S Series (103-)

Model Code

The following 30-digit coding system has been developed to identify all of the configuration options for the S motor. Use this model code to specify a motor with the desired features. All 30-digits of the code must be present when ordering. You may want to photocopy the matrix below to ensure that each number is entered in the correct box.

M	S	0	*	*	*	*	*	*	*	*	*	*	*	*	*	*	*	*	*	*	*	*	*	*	*	*	M
1	2	3	4	5	6	7	8	9	10	11	12	13	14	15	16	17	18	19	20	21	22	23	24	25	26	27	28	29	30

1 Product

M – Motor

2, 3 Series

S0 – S Series Motor

4, 5, 6 Displacement cm^3/r [in^3/r]

036 – 58 [3.6]

046 – 76 [4.6]

057 – 93 [5.7]

073 – 120 [7.3]

088 – 144 [8.8]

101 – 165 [10.1]

114 – 186 [11.4]

137 – 224 [13.7]

182 – 299 [18.2]

227 – 371 [22.7]

7, 8 Mounting Type

AA – 2 Bolt Std: 82.50 [3.248] Dia. x 3.05 [.120] Pilot, 13.59 [.535] Dia. Mounting Holes on 106.35 [4.187] Dia. B.C.

BA – 4 Bolt Std: 44.40 [1.748] Dia. x 3.05 [.120] Pilot, .375-16 UNC-2B Mounting Holes on 82.55 [3.250] Dia. B.C.

CA – 2 Bolt Std: 82.50 [3.248] Dia. x 6.10 [.240] Pilot, 10.41 [.410] Dia. Mounting Holes on 106.35 [4.187] Dia. B.C. (SAE A)

DD – 2 Bolt Std: 101.60 [4.000] Dia. x 6.10 [.240] Pilot, 14.35 [.565] Dia. Mounting Holes on 146.05 [5.750] Dia. B.C. (SAE B) (Ductile)

EA – 4 Bolt Magneto: 82.50 [3.248] Dia. x 3.05 [.120] Pilot, 13.59 [.535] Dia. Mounting Holes on 106.35 [4.187] Dia. B.C.

FA – 4 Bolt Std: 44.40 [1.748] Dia. x 3.05 [.120] Pilot, M10 x 1.5-6h Mounting Holes on 82.55 [3.250] Dia. B.C.

LA – 2 Bolt Std: 44.45 [1.750] Dia. x 3.05 [.120] Pilot, 13.59 [.535] Dia. Mounting Holes on 106.35 [4.187] Dia. B.C.

MA - 2 Bolt (Standard) 82.50 [3.248] Dia. x 8.13 [.320] Pilot, 13.59 [.535] Dia. Mounting Holes on 106.35 [4.187] Dia. B.C., w/o O-ring Groove

9, 10 Output Shaft

01 – 25.4 [1.00] Dia. Straight, Woodruff Key, .250-20 UNC-2B Hole in Shaft End

02 – 25.4 [1.00] Dia. SAE 6B Spline, .250-20 UNC-2B Hole in Shaft End

07 – 25.4 [1.00] Dia. Straight, 8.03 [.316] Dia. Crosshole 11.2 [.44] From End, 5.6 [.22] Extra Length

08 – 25.4 [1.00] Dia. Straight, 10.31 [.406] Dia. Crosshole 15.7 [.62] From End, .250-20 UNC-2B Hole in Shaft End

16 – 22.22 [.875] Dia. SAE 13 Tooth Spline (SAE B)

17 – 22.22 [.875] Dia. Straight, 6.4 [.25] x 19.0 [.75] Square Key (SAE B)

18 – 25.4 [1.00] Dia. Tapered, Woodruff Key and Nut, 34.92 [1.375] Taper Length

24 – 25.00 [.984] Dia. Straight, 8.00 [.315] Key, M8 x 1.25-6H Hole in Shaft End

39 - 25.00 [.984] Dia. Straight (k6), 8.00 [.315] Key, M8 x 1.25-6H Hole in Shaft End

11, 12 Port Type

AA – .875-14 UNF-2B SAE O-Ring Ports

AB – .500-14 NPTF Dryseal Pipe Thread Ports

AC – Manifold Ports (.3125-18 UNC-2B Mounting Holes)

AD – Manifold Ports (M8 x 1.25-6H Mounting Holes)

AF – G 1/2 BSP Straight Thread Ports

13, 14 Case Flow Options ††

00 – None Specified

01 – 4375-20 UNF-2B SAE O-Ring Port (End Cap)

02 – G 1/4 BSP Straight THD Port (End Cap)

03 – Manifold Case Drain

04 – .4375-20 UNF-2B SAE O-RING PORT (SIDE OF HOUSING)

05 – .3125-24 UNF-2B SAE O-RING PORT (MOUNTING FLANGE)

11 – Internal Check Valves

†† – Internal check valves are standard features.

15 Geroler® Options

0 – None Specified

16 Shaft Options

0 – None Specified

N – Electroless Nickel Plated

17, 18 Seal Options

00 – Standard Seals

02 – Seal Guard

03 – Viton Seals

04 – Viton Shaft Seal

07 – High Pressure Shaft Seal

11 – High pressure shaft seal, slinger seal

19 – Extreme duty seal guard

19, 20 Speed Sensor Options

00 – None

AA – Speed Sensor Options 12mm Digital Speed Pickup (15 pulse) without lead wire

AB – Magnetic Speed Pickup (60 Pulse by Quadrature), No lead wire with M12 connector (A=Power, B=Common, C=Signal)

21, 22 Manifold Block Options

00 – None

* Contact your Eaton sales representative for available options.

23, 24 Special Features (Hardware)

00 – None Specified

AB – Low Speed Valving

SS – Stainless Steel Flange Bolts

25 Special Assembly Instructions

0 – None

1 – Reverse Rotation

2 – Flange Rotated 90°

3 – Reverse Rotation, Flange Rotated 90°

26, 27 Paint/Packaging Options

00 – No Paint

AA – Low Gloss Black Primer

AD – Environmental Coated Gloss White

AF – Environmental Coated Black

28, 29 Eaton Assigned Code When Applicable

00 – Assigned Code

30 Eaton Assigned Design Code

M – Twelve (12)

Feature in **bold** are preferred and allow for shorter lead time.

Notes

T Series (158-)

Highlights

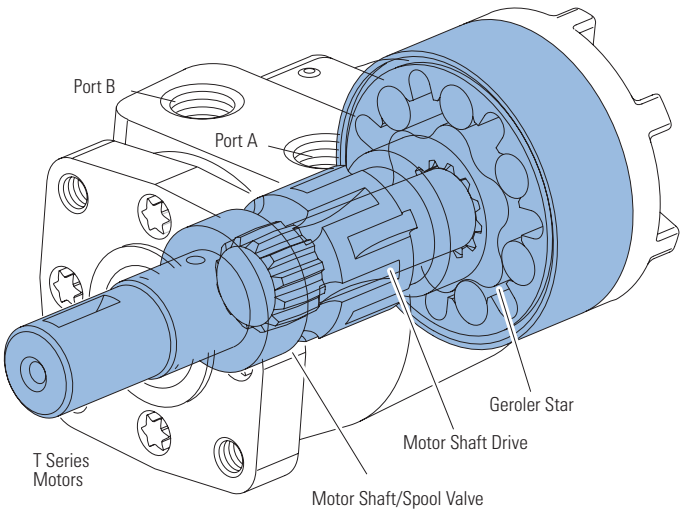

Description

The newest Geroler motor, the "T Series, features the latest innovations in Geroler technology. These innovations include optimized Geroler geometry with lower drive running angle for improved life and improved low speed performance. In addition, the improved housing and smaller diameter end cap results in increased envelope rigidity which improves efficiency under high pressure loads. All of these innovations come together to make the T Series motor the highest performing motor in its class.

Specifications for T Series Motors

Geroler Element	11 Displacements
Flow l/min [GPM]	55 [15] Continuous***
	75 [20] Intermittent**
Speed	Up to 1021 RPM
Pressure bar [PSI]	155 [2250] Cont.***
	190 [2750] Inter.**
Torque Nm [lb-in]	441 [3905] Cont.***
	486 [4300] Inter.**

*** Continuous— (Cont.) Continuous rating, motor may be run continuously at these ratings.
** Intermittent— (Inter.) Intermittent operation, 10% of every minute.

Features:

- Constant clearance Geroler, geometry
- Optimized drive system with reduced running angle
- Three-pressure zone design (ability to reduce case pressure)
- Variety of displacements, shafts and mounts
- Special options to meet customer needs

Benefits:

- High efficiency
- Smooth low-speed operation
- Extended motor life (especially at low speed conditions)
- Design flexibility
- Ability to optimize designs for your application needs
- Extends leak-free performance

Applications:

- Agricultural augers, harvesters, seeders
- Car wash brushes
- Food processing
- Railroad maintenance equipment
- Machine tools
- Conveyors
- Industrial sweepers and floor polishers
- Saw mill works
- Turf equipment
- Concrete and asphalt equipment
- Skid steer attachments
- Many more


Crane (winch)


Paving


Harvester


Crane and winches

T Series
(158-, 185-)

Specifications

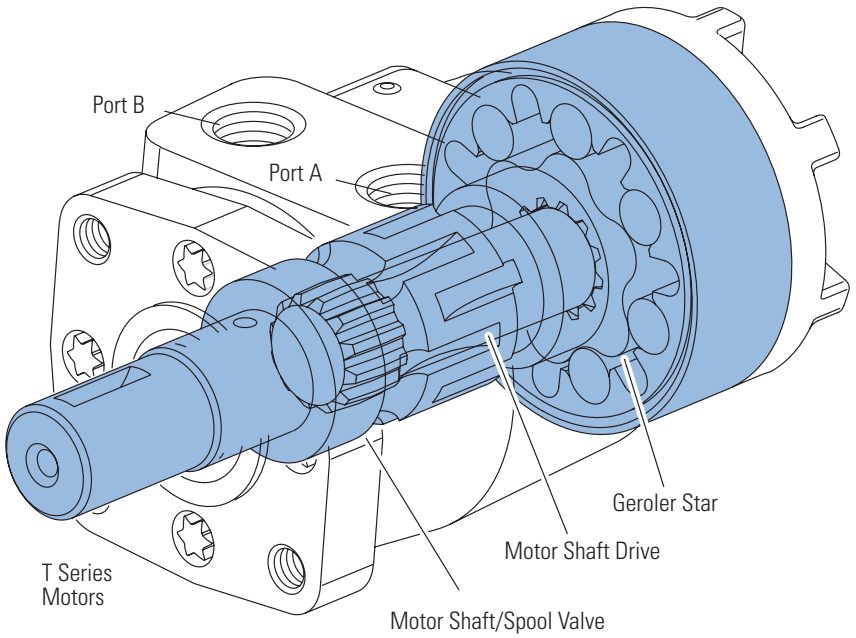

SPECIFICATION DATA — T MOTORS

Displ. cm^3/r [in^3/r]		36 [2.2]	49 [3.0]	66 [4.0]	80 [4.9]	102 [6.2]	131 [8.0]	157 [9.6]	195 [11.9]	244 [14.9]	306 [18.7]	370 [22.6]
Max. Speed (RPM) @ Continuous Flow		1021	906	849	694	550	426	355	287	229	183	152
Flow LPM [GPM]	Continuous	38 [10]	45 [12]	57 [15]	57 [15]	57 [15]	57 [15]	57 [15]	57 [15]	57 [15]	57 [15]	57 [15]
	Intermittent	38 [10]	57 [15]	68 [18]	76 [20]	76 [20]	76 [20]	76 [20]	76 [20]	76 [20]	76 [20]	76 [20]
Torque Nm [lb-in]	Continuous	76 [672]	105 [928]	138 [1222]	174 [1541]	219 [1936]	251 [2226]	297 [2628]	359 [3178]	410 [3633]	441 [3905]	430 [3811]
	Intermittent **	93 [824]	118 [1131]	168 [1488]	212 [1872]	264 [2339]	307 [2718]	359 [3178]	437 [3864]	485 [4290]	483 [4275]	486 [4300]
Pressure Δ Bar Δ PSI]	Continuous*	155 [2250]	155 [2250]	155 [2250]	155 [2250]	155 [2250]	138 [2000]	138 [2000]	138 [2000]	127 [1850]	110 [1600]	90 [1300]
	Intermittent**	190 [2750]	190 [2750]	190 [2750]	190 [2750]	190 [2750]	172 [2500]	172 [2500]	172 [2500]	155 [2250]	124 [1800]	103 [1500]

A simultaneous maximum torque and maximum speed NOT recommended.

Note:

To assure best motor life, run motor for approximately one hour at 30% of rated pressure before application to full load. Be sure motor is filled with fluid prior to any load applications.

Maximum Inlet Pressure:

190 Bar [2750 PSI] without regard to Δ Bar [D PSI] and/or back pressure ratings or combination thereof.

6B splined or Tapered shafts are recommended whenever operation above 282 NM [2500 lb-in] of torque, especially for those applications subject to frequent reversals.

Δ Pressure:

The true Δ bar [Δ PSI] between inlet port and outlet port

Continuous Rating:

Motor may be run continuously at these ratings

Intermittent Operation:

10% of every minute

Recommended Fluids:

Premium quality, anti-wear type hydraulic oil with a viscosity of not less than 70 SUS at operating temperature.

Recommended System Operating Temp.:

-34°C to 82°C [-30°F to 180°F]

Recommended Filtration:

per ISO Cleanliness Code 4406, level 20/18/13

T Series
(158-, 185-)

Performance Data

Motors run with high efficiency in all areas designated with a number for torque and speed. For best motor life select a motor to run with a torque and speed range shown in the light shaded area.

Performance data is typical at 120 SUS. Actual data may vary slightly from unit to unit in production.

Continuous

Intermittent

36 cm³/r [2.2 in³/r]

Δ Pressure Bar [PSI]

Continuous

Flow LPM [GPM]	[200] 14	[400] 28	[600] 41	[800] 55	[1000] 69	[1200] 83	[1400] 97	[1600] 110	[1800] 124	[2000] 138	[2200] 152	[2250] 155	Max. Continuous [2750] 190
[2] 7,6	[50] 6 209	[110] 12 203	[172] 19 197	[233] 26 191	[291] 33 189	[348] 39 181	[401] 45 167	[455] 51 164	[501] 57 153	[546] 62 139	[590] 67 122	[596] 67 116	[635] 72 64
[4] 15,1	[50] 6 415	[109] 12 411	[172] 19 398	[233] 26 388	[296] 33 384	[355] 40 381	[414] 47 368	[475] 54 357	[534] 60 354	[584] 66 323	[646] 73 304	[659] 74 302	[786] 89 283
[6] 22,7	[43] 5 617	[108] 12 613	[171] 19 602	[233] 26 595	[298] 34 585	[361] 41 570	[420] 47 563	[479] 54 558	[538] 61 534	[595] 67 520	[657] 74 504	[672] 76 496	[824] 93 425
[8] 30,3	[39] 4 821	[101] 11 815	[164] 19 803	[226] 26 797	[292] 33 784	[354] 40 774	[415] 47 758	[475] 54 747	[538] 61 732	[592] 67 707	[656] 74 688	[670] 76 680	[819] 92 607
Max. Continuous [10] 37,9	[30] 3 1021	[93] 11 1014	[155] 18 1002	[214] 24 999	[278] 31 981	[342] 39 965	[406] 46 953	[473] 53 937	[532] 60 921	[590] 67 903	[650] 73 880	[668] 75 873	[805] 91 799

[93] 11 1014 } Torque [lb-in] Nm Speed RPM

49 cm³/r [3.0 in³/r]

Δ Pressure Bar [PSI]

Continuous

Flow LPM [GPM]	[200] 14	[400] 28	[600] 41	[800] 55	[1000] 69	[1200] 83	[1400] 97	[1600] 110	[1800] 124	[2000] 138	[2200] 152	[2250] 155	Max. Continuous [2750] 190
[2] 7,6	[73] 8 152	[161] 18 152	[245] 28 148	[327] 37 147	[408] 46 142	[486] 55 141	[563] 64 134	[641] 72 124	[710] 80 115	[786] 89 109	[849] 96 95	[866] 98 92	[1023] 116 58
[4] 15,1	[72] 8 303	[160] 18 298	[246] 28 294	[329] 37 290	[416] 47 276	[500] 56 273	[584] 66 265	[668] 75 261	[746] 84 245	[825] 93 243	[901] 102 235	[922] 104 228	[1123] 127 152
[6] 22,7	[58] 7 461	[148] 17 450	[234] 26 445	[326] 37 438	[413] 47 434	[500] 56 421	[583] 66 419	[663] 75 410	[746] 84 407	[827] 93 389	[909] 103 376	[928] 105 373	[1131] 128 344
[8] 30,3	[44] 5 607	[127] 14 603	[216] 24 600	[306] 35 590	[392] 44 583	[480] 54 576	[566] 64 564	[652] 74 554	[734] 83 545	[815] 92 536	[897] 101 522	[917] 104 520	[1125] 127 503
[10] 37,9	[39] 4 755	[128] 14 750	[213] 24 745	[302] 34 738	[391] 44 732	[477] 54 719	[562] 63 713	[647] 73 702	[731] 83 696	[815] 92 682	[897] 101 663	[917] 104 661	[1121] 127 638
Max. Continuous [12] 45,4	[33] 4 906	[119] 13 902	[203] 23 895	[291] 33 883	[378] 43 875	[464] 52 862	[551] 62 859	[635] 72 844	[719] 81 835	[802] 91 819	[883] 100 806	[900] 102 804	[1061] 120 788
Max. Intermittent [15] 56,8	[26] 3 1132	[86] 10 1124	[172] 19 1113	[256] 29 1115	[342] 39 1106	[430] 49 1106	[505] 57 1098	[591] 67 1093	[674] 76 1079	[745] 84 1070	[830] 94 1058	[851] 96 1056	

B-4

T Series
(158-, 185-)

Performance Data

Motors run with high efficiency in all areas designated with a number for torque and speed. For best motor life select a motor to run with a torque and speed range shown in the light shaded area.

Performance data is typical at 120 SUS. Actual data may vary slightly from unit to unit in production.

Continuous

Intermittent

66 cm³/r [4.0 in³/r]

Pressure Bar [PSI]
Continuous

Flow LPM [GPM]	[200] 14	[400] 28	[600] 41	[800] 55	[1000] 69	[1200] 83	[1400] 97	[1600] 110	[1800] 124	[2000] 138	[2200] 152	[2250] 155	Max. Continuous [2750] 190
[2] 7,6	[78] 9 114	[191] 22 111	[303] 34 110	[414] 47 107	[522] 59 105	[625] 71 101	[706] 80 96	[804] 91 92	[898] 101 87	[991] 112 81	[1081] 122 73	[1103] 125 72	[1318] 149 48
[4] 15,1	[97] 11 229	[209] 24 229	[325] 37 217	[441] 50 216	[548] 62 212	[657] 74 205	[766] 87 194	[873] 99 190	[972] 110 186	[1077] 122 183	[1181] 133 181	[1205] 136 178	[1437] 162 170
[6] 22,7	[79] 9 344	[192] 22 343	[309] 35 335	[426] 48 334	[534] 60 321	[649] 73 320	[760] 86 319	[874] 99 315	[984] 111 291	[1090] 123 288	[1190] 134 279	[1218] 138 276	[1488] 168 270
[8] 30,3	[75] 8 456	[191] 22 451	[304] 34 447	[419] 47 442	[532] 60 431	[645] 73 426	[759] 86 419	[871] 98 415	[982] 111 412	[1092] 123 401	[1197] 135 391	[1222] 138 386	[1458] 165 339
[10] 37,9	[49] 6 569	[163] 18 565	[283] 32 560	[398] 45 552	[509] 58 547	[623] 70 541	[742] 84 532	[856] 97 525	[971] 110 512	[1080] 122 504	[1186] 134 498	[1209] 137 496	[1425] 161 475
[12] 45,4	[24] 3 681	[156] 18 678	[270] 31 671	[385] 43 665	[502] 57 658	[614] 69 651	[729] 82 641	[845] 95 635	[963] 109 623	[1067] 121 612	[1182] 134 604	[1209] 137 601	[1472] 166 571
[14] 53,0	[19] 2 793	[143] 16 788	[261] 29 787	[370] 42 778	[485] 55 771	[602] 68 762	[718] 81 753	[837] 95 746	[948] 107 733	[1064] 120 723	[1175] 133 715	[1199] 135 711	[1436] 162 677
Max. Continuous [15] 56,8	[13] 1 849	[120] 14 844	[236] 27 839	[352] 40 832	[471] 53 826	[590] 67 819	[707] 80 806	[823] 93 800	[939] 106 786	[1052] 119 779	[1165] 132 770	[1192] 135 766	[1462] 165 725
Max. Intermittent [18] 68,1		[107] 12 1006	[215] 24 1003	[326] 37 998	[442] 50 988	[555] 63 976	[669] 76 975	[786] 89 965	[900] 102 952	[1016] 115 940	[1123] 127 924	[1152] 130 919	

80 cm³/r [4.9 in³/r]

Pressure Bar [PSI]
Continuous

Flow LPM [GPM]	[200] 14	[400] 28	[600] 41	[800] 55	[1000] 69	[1200] 83	[1400] 97	[1600] 110	[1800] 124	[2000] 138	[2200] 152	[2250] 155	Max. Continuous [2750] 190
[2] 7,6	[123] 14 93	[265] 30 90	[405] 46 86	[544] 61 83	[680] 77 80	[804] 91 75	[934] 106 70	[1052] 119 63	[1181] 133 57	[1079] 122 43	[937] 106 24	[895] 101 20	
[4] 15,1	[120] 14 187	[264] 30 185	[406] 46 183	[551] 62 179	[689] 78 175	[828] 94 171	[965] 109 166	[1101] 124 162	[1237] 140 156	[1369] 155 150	[1505] 170 142	[1537] 174 140	[1857] 210 121
[6] 22,7	[113] 13 279	[255] 29 275	[398] 45 271	[542] 61 267	[682] 77 265	[823] 93 258	[963] 109 253	[1101] 124 248	[1239] 140 240	[1373] 155 232	[1508] 170 223	[1541] 174 221	[1868] 211 198
[8] 30,3	[99] 11 372	[243] 27 367	[386] 44 364	[528] 60 359	[669] 76 354	[812] 92 351	[954] 108 343	[1094] 124 338	[1233] 139 333	[1368] 155 324	[1503] 170 315	[1537] 174 313	[1872] 212 289
[10] 37,9	[84] 9 463	[228] 26 460	[371] 42 456	[514] 58 450	[655] 74 446	[798] 90 441	[941] 106 435	[1080] 122 428	[1219] 138 420	[1357] 153 412	[1496] 169 403	[1530] 173 399	[1870] 211 368
[12] 45,4	[63] 7 557	[209] 24 552	[354] 40 547	[498] 56 543	[638] 72 537	[782] 88 530	[926] 105 523	[1067] 121 515	[1208] 136 509	[1346] 152 500	[1484] 168 489	[1520] 172 487	[1864] 211 470
[14] 53,0	[55] 6 649	[185] 21 646	[331] 37 642	[476] 54 635	[620] 70 630	[762] 86 622	[904] 102 616	[1046] 118 609	[1188] 134 599	[1327] 150 592	[1467] 166 581	[1502] 170 578	[1842] 208 550
Max. Continuous [15] 56,8	[51] 6 694	[176] 20 691	[316] 36 687	[463] 52 680	[609] 69 673	[748] 85 668	[891] 101 660	[1037] 117 650	[1177] 133 642	[1316] 149 634	[1457] 165 622	[1491] 168 619	[1844] 208 598
Max. Intermittent [20] 75,7		[160] 18 916	[305] 34 910	[455] 51 893	[578] 65 893	[737] 83 875	[857] 97 866	[968] 109 877	[1144] 129 843	[1277] 144 833	[1412] 160 839	[1446] 163 836	

[176] 20 691 } Torque [lb-in] Nm Speed RPM

T Series
(158-, 185-)

Performance Data

Motors run with high efficiency in all areas designated with a number for torque and speed. For best motor life select a motor to run with a torque and speed range shown in the light shaded area.

Performance data is typical at 120 SUS. Actual data may vary slightly from unit to unit in production.

Continuous

Intermittent

102 cm³/r [6.2 in³/r]

Pressure Bar [PSI]
Continuous

Flow LPM [GPM]	[200] 14	[400] 28	[600] 41	[800] 55	[1000] 69	[1200] 83	[1400] 97	[1600] 110	[1800] 124	[2000] 138	[2200] 152	[2250] 155	Max. Continuous [2750] 190
[2] 7,6	[161] 18 73	[341] 39 71	[519] 59 68	[697] 79 66	[871] 98 63	[1030] 116 60	[1193] 135 56	[1349] 152 51	[1511] 171 46	[1496] 169 36	[1441] 163 23	[1421] 161 20	
[4] 15,1	[157] 18 149	[340] 38 146	[520] 59 144	[702] 79 141	[879] 99 138	[1056] 119 135	[1229] 139 131	[1401] 158 128	[1567] 177 124	[1727] 195 118	[1889] 213 111	[1925] 217 109	[2271] 257 92
[6] 22,7	[147] 17 221	[329] 37 217	[510] 58 214	[692] 78 211	[871] 98 208	[1050] 119 204	[1227] 139 199	[1401] 158 195	[1571] 178 190	[1731] 196 184	[1895] 214 176	[1936] 219 174	[2339] 264 154
[8] 30,3	[132] 15 294	[315] 36 290	[497] 56 287	[675] 76 284	[857] 97 280	[1038] 117 277	[1216] 137 271	[1392] 157 267	[1564] 177 262	[1725] 195 255	[1891] 214 247	[1932] 218 245	[2326] 263 220
[10] 37,9	[109] 12 367	[293] 33 363	[477] 54 360	[657] 74 355	[839] 95 351	[1018] 115 347	[1198] 135 343	[1374] 155 337	[1542] 174 332	[1711] 193 325	[1878] 212 318	[1918] 217 315	[2326] 263 287
[12] 45,4	[84] 9 440	[271] 31 436	[457] 52 432	[638] 72 429	[818] 92 424	[999] 113 419	[1179] 133 414	[1354] 153 409	[1527] 173 402	[1697] 192 395	[1858] 210 386	[1901] 215 384	[2323] 262 364
[14] 53,0	[59] 7 513	[242] 27 510	[428] 48 506	[611] 69 501	[794] 90 497	[974] 110 492	[1151] 130 487	[1328] 150 482	[1502] 170 475	[1674] 189 469	[1841] 208 458	[1883] 213 456	[2301] 260 428
Max. Continuous [15] 56,8	[39] 4 550	[227] 26 545	[411] 46 542	[595] 67 537	[780] 88 532	[957] 108 528	[1136] 128 522	[1314] 148 516	[1486] 168 510	[1658] 187 502	[1828] 207 492	[1869] 211 490	[2285] 258 463
Max. Intermittent [20] 75,7		[154] 17 724	[328] 37 718	[515] 58 720	[710] 80 709	[874] 99 707	[1060] 120 696	[1243] 140 684	[1405] 159 683	[1579] 178 670	[1763] 199 659	[1803] 204 660	

131 cm³/r [8.0 in³/r]

Pressure Bar [PSI]
Continuous

Flow LPM [GPM]	[200] 14	[400] 28	[600] 41	[800] 55	[1000] 69	[1200] 83	[1400] 97	[1600] 110	[1800] 124	[2000] 138	Max. Continuous [2500] 172
[2] 7,6	[219] 25 57	[450] 51 55	[682] 77 53	[915] 103 51	[1144] 129 49	[1348] 152 47	[1561] 176 43	[1771] 200 40	[1979] 224 36	[2159] 244 30	
[4] 15,1	[212] 24 115	[449] 51 113	[681] 77 110	[917] 104 109	[1148] 130 107	[1376] 155 105	[1600] 181 102	[1822] 206 99	[2025] 229 96	[2221] 251 91	[2629] 297 75
[6] 22,7	[197] 22 171	[435] 49 168	[669] 76 166	[903] 102 163	[1139] 129 160	[1370] 155 157	[1600] 181 154	[1818] 205 150	[2032] 230 147	[2226] 252 142	[2718] 307 125
[8] 30,3	[181] 20 227	[417] 47 225	[657] 74 222	[886] 100 219	[1122] 127 217	[1359] 154 213	[1589] 180 209	[1812] 205 206	[2022] 228 202	[2215] 250 196	[2699] 305 175
[10] 37,9	[144] 16 284	[389] 44 281	[631] 71 278	[859] 97 275	[1098] 124 271	[1330] 150 267	[1562] 176 265	[1783] 201 261	[1993] 225 258	[2198] 248 252	[2687] 304 231
[12] 45,4	[114] 13 341	[361] 41 338	[605] 68 334	[838] 95 332	[1075] 121 328	[1307] 148 325	[1532] 173 321	[1755] 198 318	[1965] 222 312	[2177] 246 307	[2671] 302 285
[14] 53,0	[82] 9 397	[327] 37 394	[569] 64 391	[803] 91 387	[1042] 118 384	[1273] 144 361	[1498] 169 378	[1722] 195 374	[1935] 219 370	[2147] 243 365	[2655] 300 339
Max. Continuous [15] 56,8	[66] 7 426	[302] 34 423	[550] 62 422	[785] 89 415	[1025] 116 412	[1254] 142 409	[1480] 167 405	[1704] 193 402	[1915] 216 398	[2119] 239 392	[2648] 299 367
Max. Intermittent [20] 75,7		[177] 20 565	[429] 48 560	[678] 77 556	[908] 103 553	[1143] 129 549	[1375] 155 546	[1596] 180 541	[1811] 205 536	[2017] 228 527	

[302] 34 423 } Torque [lb-in] Nm Speed RPM

T Series
(158-, 185-)

Performance Data

Motors run with high efficiency in all areas designated with a number for torque and speed. For best motor life select a motor to run with a torque and speed range shown in the light shaded area.

Performance data is typical at 120 SUS. Actual data may vary slightly from unit to unit in production.

Continuous

Intermittent

157 cm³/r [9.6 in³/r]

Δ Pressure Bar [PSI]

Continuous

Flow LPM [GPM]	[200] 14	[400] 28	[600] 41	[800] 55	[1000] 69	[1200] 83	[1400] 97	[1600] 110	[1800] 124	Max. Continuous [2000] 138	Max. Intermittent [2500] 172
[2] 7,6	[264] 30 47	[541] 61 45	[819] 93 44	[1092] 123 42	[1357] 153 40	[1605] 181 37	[1847] 209 34	[2084] 235 30	[2311] 261 25	[1858] 210 16	
[4] 15,1	[259] 29 96	[541] 61 95	[822] 93 92	[1101] 124 91	[1373] 155 90	[1638] 185 88	[1890] 214 85	[2145] 242 82	[2383] 269 78	[2613] 295 73	[3063] 346 60
[6] 22,7	[241] 27 142	[526] 59 140	[808] 91 138	[1090] 123 136	[1368] 155 134	[1638] 185 132	[1900] 215 129	[2150] 243 125	[2399] 271 121	[2628] 297 114	[3169] 358 99
[8] 30,3	[219] 25 189	[506] 57 187	[789] 89 185	[1068] 121 183	[1348] 152 181	[1625] 184 178	[1885] 213 175	[2140] 242 172	[2388] 270 166	[2619] 296 159	[3178] 359 140
[10] 37,9	[180] 20 237	[472] 53 234	[759] 86 232	[1037] 117 230	[1319] 149 227	[1590] 180 224	[1853] 209 222	[2111] 239 218	[2355] 266 211	[2594] 293 203	[3170] 358 183
[12] 45,4	[141] 16 284	436] 49 282	[728] 82 279	[1010] 114 277	[1292] 146 274	[1561] 176 272	[1821] 206 269	[2079] 235 265	[2331] 263 257	[2573] 291 248	[3162] 357 225
[14] 53,0	[101] 11 332	[397] 45 329	[687] 78 326	[969] 109 323	[1252] 141 321	[1519] 172 319	[1778] 201 316	[2040] 230 311	[2295] 259 305	[2539] 287 296	[3147] 356 274
Max. Continuous [15] 56,8	[81] 9 355	[367] 41 353	[665] 75 350	[944] 107 347	[1231] 139 344	[1497] 169 342	[1755] 198 339	[2018] 228 334	[2273] 257 327	[2512] 284 318	[3136] 354 300
Max. Intermittent [20] 75,7		[221] 25 472	[519] 59 467	[814] 92 464	[1095] 124 462	[1368] 155 459	[1631] 184 455	[1891] 214 450	[2149] 243 443	[2396] 271 433	

195 cm³/r [11.9 in³/r]

Δ Pressure Bar [PSI]

Continuous

Flow LPM [GPM]	[200] 14	[400] 28	[600] 41	[800] 55	[1000] 69	[1200] 83	[1400] 97	[1600] 110	[1750] 121	[1800] 125	Max. Continuous [2000] 138	Max. Intermittent [2500] 172
[2] 7,6	[330] 37 38	[671] 76 36	[1016] 115 34	[1345] 152 33	[1654] 187 31	[1969] 222 28	[2242] 253 25	[2507] 283 20	[2689] 304 16	[2748] 310 14	[2973] 336 8	
[4] 15,1	[328] 37 77	[675] 76 77	[1026] 116 75	[1366] 154 73	[1692] 191 73	[2010] 227 71	[2289] 259 68	[2586] 292 65	[2799] 316 62	[2867] 324 61	[3144] 355 55	[3797] 429 40
[6] 22,7	[306] 35 115	[658] 74 113	[1011] 114 111	[1360] 154 110	[1698] 192 109	[2021] 228 107	[2324] 263 104	[2604] 294 100	[2829] 320 97	[2901] 328 95	[3178] 359 87	[3831] 433 68
[8] 30,3	[272] 31 153	[634] 72 151	[980] 111 150	[1331] 150 148	[1675] 189 146	[2003] 226 144	[2300] 260 142	[2592] 293 139	[2815] 318 134	[2888] 326 132	[3174] 359 123	[3864] 437 99
[10] 37,9	[238] 27 192	[596] 67 189	[945] 107 188	[1296] 146 186	[1637] 185 184	[1960] 221 183	[2255] 255 181	[2565] 290 176	[2786] 315 168	[2857] 323 166	[3140] 355 156	[3816] 431 133
[12] 45,4	[181] 20 230	[545] 62 228	[908] 103 226	[1260] 142 224	[1607] 182 222	[1924] 217 221	[2223] 251 219	[2529] 286 213	[2759] 312 207	[2836] 320 204	[3121] 353 192	[3807] 430 160
[14] 53,0	[154] 17 268	[500] 56 266	[860] 97 264	[1211] 137 261	[1556] 176 259	[1869] 211 259	[2175] 246 256	[2483] 281 251	[2713] 307 244	[2792] 315 242	[3080] 348 229	[3778] 427 199
Max. Continuous [15] 56,8	[140] 16 287	[465] 53 285	[832] 94 283	[1179] 133 281	[1525] 172 279	[1835] 207 278	[2144] 242 275	[2459] 278 269	[2693] 304 262	[2768] 313 260	[3061] 346 247	[3764] 425 220
Max. Intermittent [20] 75,7		[291] 33 382	[653] 74 378	[1013] 114 375	[1366] 154 373	[1689] 191 372	[1987] 225 368	[2298] 260 363	[2540] 287 356	[2622] 296 353	[2928] 331 342	

[465] Torque [lb-in]
53 Nm
285 Speed RPM

T Series
(158-, 185-)

Performance Data

Motors run with high efficiency in all areas designated with a number for torque and speed. For best motor life select a motor to run with a torque and speed range shown in the light shaded area.

Performance data is typical at 120 SUS. Actual data may vary slightly from unit to unit in production.

Continuous

Intermittent

244 cm³/r [14.9 in³/r]

Pressure Bar [PSI]

Continuous

Flow LPM [GPM]	[200] 14	[400] 28	[600] 41	[800] 55	[1000] 69	[1200] 83	[1400] 97	[1600] 110	[1650] 114	[1800] 125	[1850] 127	Max. Continuous	Max. Intermittent
[2] 7,6	[406] 46 30	[833] 94 29	[1260] 142 27	[1655] 187 26	[2038] 230 24	[2403] 272 22	[2707] 306 17	[2597] 293 12	[2552] 288 11	[2373] 268 7	[2299] 260 6		
[4] 15,1	[404] 46 62	[843] 95 62	[1277] 144 60	[1695] 192 59	[2083] 235 59	[2468] 279 57	[2820] 319 55	[3177] 359 50	[3261] 368 49	[3509] 396 46	[3589] 406 44		[4194] 474 35
[6] 22,7	[382] 43 92	[823] 93 91	[1261] 142 90	[1687] 191 89	[2088] 236 88	[2477] 280 86	[2843] 321 82	[3196] 361 78	[3285] 371 76	[3547] 401 72	[3633] 410 71		[4290] 485 60
[8] 30,3	[341] 39 123	[787] 89 122	[1220] 138 121	[1651] 187 120	[2059] 233 119	[2454] 277 116	[2820] 319 113	[3177] 359 108	[3265] 369 106	[3530] 399 101	[3615] 408 99		[4285] 484 85
[10] 37,9	[297] 34 154	[744] 84 152	[1177] 133 151	[1611] 182 150	[2017] 228 148	[2412] 273 146	[2774] 313 143	[3151] 356 136	[3241] 366 134	[3504] 396 127	[3593] 406 125		[4269] 482 107
[12] 45,4	[225] 25 184	[687] 78 183	[1132] 128 181	[1553] 175 180	[1967] 222 179	[2360] 267 177	[2734] 309 173	[3105] 351 166	[3194] 361 163	[3466] 392 156	[3554] 402 153		[4237] 479 134
[14] 53,0	[154] 17 214	[628] 71 213	[1072] 121 212	[1498] 169 211	[1910] 216 209	[2298] 260 207	[2674] 302 202	[3052] 345 195	[3148] 356 193	[3419] 386 185	[3510] 397 182		[4226] 477 161
Max. Continuous [15] 56,8	[119] 13 229	[586] 66 228	[1035] 117 227	[1458] 165 226	[1872] 212 224	[2261] 255 222	[2637] 298 217	[3022] 341 209	[3116] 352 207	[3389] 383 200	[3488] 394 197		[4220] 477 174
Max. Intermittent [20] 75,7		[372] 42 305	[816] 92 303	[1251] 141 301	[1663] 188 300	[2067] 234 297	[2448] 277 292	[2832] 320 284	[2928] 331 281	[3214] 363 273	[3312] 374 270		

306 cm³/r [18.7 in³/r]

Pressure Bar [PSI]

Continuous

Flow LPM [GPM]	[200] 14	[400] 28	[600] 41	[800] 55	[1000] 69	[1200] 83	[1400] 97	[1500] 103	[1600] 110	Max. Continuous	Max. Intermittent
[2] 7,6	[499] 56 24	[1035] 117 23	[1560] 176 22	[2034] 230 21	[2501] 283 19	[2912] 329 16	[3239] 366 11	[2859] 323 8	[2400] 271 5		
[4] 15,1	[497] 56 49	[1052] 119 49	[1590] 180 48	[2101] 237 48	[2561] 289 47	[3023] 342 47	[3464] 391 44	[3680] 416 41	[3886] 439 38		[4221] 477 30
[6] 22,7	[480] 54 74	[1031] 116 74	[1578] 178 72	[2096] 237 72	[2564] 290 71	[3023] 342 69	[3464] 391 64	[3689] 417 62	[3905] 441 60		[4275] 483 51
[8] 30,3	[427] 48 99	[975] 110 98	[1520] 172 97	[2051] 232 97	[2525] 285 96	[2998] 339 94	[3448] 390 89	[3667] 414 86	[3881] 438 83		[4264] 482 73
[10] 37,9	[370] 42 123	[930] 105 122	[1467] 166 121	[2001] 226 120	[2477] 280 120	[2955] 334 117	[3406] 385 112	[3631] 410 108	[3852] 435 104		[4264] 482 92
[12] 45,4	[281] 32 147	[871] 98 146	[1410] 159 145	[1908] 216 145	[2400] 271 145	[2887] 326 142	[3352] 379 136	[3573] 404 131	[3790] 428 127		[4189] 473 112
[14] 53,0	[192] 22 171	[791] 89 171	[1338] 151 170	[1851] 209 170	[2338] 264 169	[2816] 318 165	[3281] 371 159	[3511] 397 154	[3743] 423 150		[4135] 467 133
Max. Continuous [15] 56,8	[148] 17 183	[738] 83 183	[1288] 146 182	[1803] 204 182	[2287] 258 181	[2773] 313 177	[3243] 366 171	[3475] 393 165	[3705] 419 160		[4098] 463 146
Max. Intermittent [20] 75,7		[476] 54 243	[1020] 115 242	[1544] 174 242	[2010] 227 241	[2519] 285 238	[3010] 340 231	[3243] 366 226	[3495] 395 209		

[738] 83 183 } Torque [lb-in] Nm Speed RPM

370 cm³/r [22.6 in³/r]

Pressure Bar [PSI]

Continuous

Flow LPM [GPM]	[200] 14	[400] 28	[600] 41	[800] 55	[1000] 69	[1200] 83	[1300] 90	[1500] 103	Max. Continuous	Max. Intermittent
[2] 7,6	[590] 67 20	[1237] 140 19	[1858] 210 18	[2406] 272 17	[2953] 334 15	[3388] 383 12	[3586] 405 11			
[4] 15,1	[588] 66 41	[1263] 143 41	[1906] 215 40	[2506] 283 40	[3029] 342 39	[3557] 402 38	[3811] 431 37		[4252] 480 36	
[6] 22,7	[580] 66 61	[1245] 141 60	[1899] 215 60	[2506] 283 59	[3029] 342 58	[3544] 400 57	[3788] 428 56		[4300] 486 54	
[8] 30,3	[514] 58 82	[1164] 132 81	[1824] 206 80	[2452] 277 79	[2975] 336 78	[3518] 397 77	[3783] 427 77		[4284] 484 75	
[10] 37,9	[444] 50 102	[1119] 126 102	[1759] 199 101	[2391] 270 101	[2928] 331 100	[3479] 393 97	[3750] 424 96		[4275] 483 93	
[12] 45,4	[337] 38 122	[1062] 120 121	[1690] 191 120	[2256] 255 119	[2813] 318 119	[3393] 383 118	[3685] 416 116		[4273] 483 112	
[14] 53,0	[231] 26 142	[958] 108 141	[1608] 182 140	[2201] 249 139	[2748] 310 138	[3319] 375 137	[3610] 408 134		[4198] 474 129	
Max. Continuous [15] 56,8	[178] 20 152	[896] 101 152	[1543] 174 151	[2147] 243 150	[2683] 303 149	[3272] 370 147	[3572] 404 146		[4187] 473 140	
Max. Intermittent [20] 75,7		[587] 66 202	[1228] 139 201	[1833] 207 201	[2331] 263 200	[2948] 333 198	[3273] 370 196			

T Series (158-)

Dimensions

(Refer to pages B-4-19 thru B-4-22 for shaft and port dimensions.)

Ports

7/8 -14 INF O-Ring Ports (2)

1/2 -14 NPTF (2)

G 1/2 BSP (2)

Manifold Ports (5/16-18 mounting threads

Standard Rotation Viewed from Shaft End

Port A Pressurized — CW
Port B Pressurized — CCW

Note:

Mounting Surface Flatness Requirement is ▱ ,13 mm [.005 inch] Max.

2 Bolt Flange

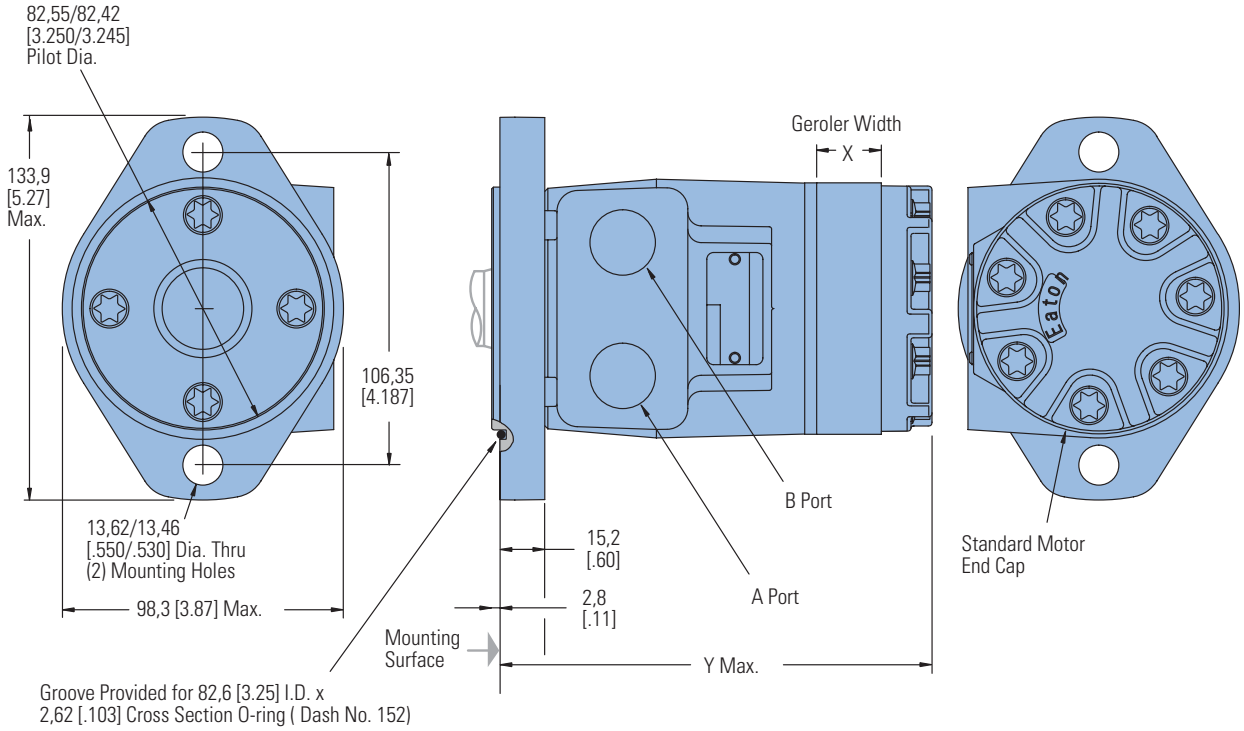

4 Bolt Flange

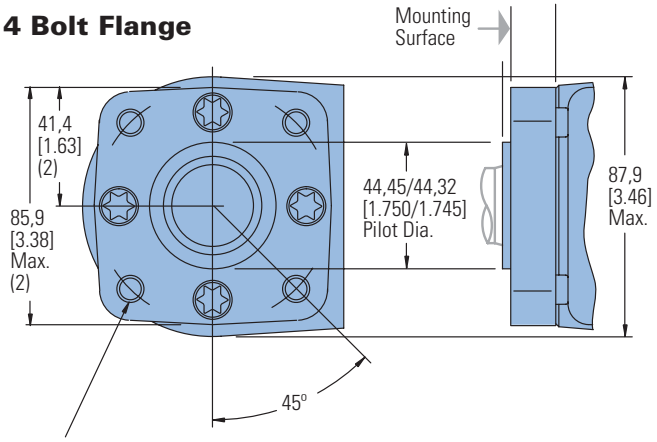

2 AND 4 BOLT FLANGE PORT DIMENSIONS

Displacement cm³/r [in³/r]	X mm [inch]	Y mm [inch]
36 [2.2]	6,6 [.26]	132,2 [5.21]
49 [3.0]	9,1 [.36]	134,6 [5.30]
66 [4.0]	12,2 [.48]	137,7 [5.42]
80 [4.9]	14,7 [.58]	140,3 [5.53]
102 [6.2]	18,5 [.73]	144,3 [5.68]
131 [8.0]	24,1 [.95]	149,6 [5.89]
157 [9.6]	29,0 [1.14]	154,5 [6.09]
195 [11.9]	35,6 [1.40]	161,3 [6.35]
244 [14.9]	44,7 [1.76]	170,3 [6.71]
306 [18.7]	56,1 [2.21]	181,6 [7.16]
370 [22.6]	72,1 [2.84]	197,9 [7.79]

T Series (158-)

Product Numbers

Use digit prefix—158- plus four digit number from charts for complete product number—Example: 158-1067.

Orders will not be accepted without the three-digit prefix.

Standard

MOUNTING	SHAFT	PORT SIZE	DISPL. cm^3/r [in^3/r] / PRODUCT NUMBER										
			36 [2.2]	49 [3.0]	66 [4.0]	80 [4.9]	102 [6.2]	131 [8.0]	157 [9.6]	195 [11.9]	244 [14.9]	306 [18.7]	370 [22.6]
2 Bolt Flange	1 in. Straight w/Woodruff Key	7/8 -14 O-Ring	158- —	—	-1537	-1034	-1035	-1538	-1036	-1037	-1038	-1039	-1040
		1/2 NPTF	158- —	—	-1540	-1026	-1027	-1541	-1028	-1029	-1030	-1031	-1032
		Manifold*	158- —	—	-1543	-1042	-1043	-1544	-1044	-1045	-1046	-1047	-1048
	1 in. SAE 6B Splined	7/8 -14 O-Ring	158- —	—	-1552	-1082	-1083	-1553	-1084	-1085	-1086	-1087	-1088
		1/2 NPTF	158- —	—	-1555	-1074	-1075	-1556	-1076	-1077	-1078	-1079	-1080
		Manifold*	158- —	—	-1558	-1090	-1091	-1559	-1092	-1093	-1094	-1095	-1096
4 Bolt Flange	1 in. Straight w/Woodruff Key	7/8 -14 O-Ring	158- —	—	-1570	-1010	-1011	-1571	-1012	-1013	-1014	-1015	-1016
		1/2 NPTF	158- —	—	-1573	-1002	-1003	-1574	-1004	-1005	-1006	-1007	-1008
		Manifold*	158- —	—	-1576	-1018	-1019	-1577	-1020	-1021	-1022	-1023	-1024
	1 in. SAE 6B Splined	7/8 -14 O-Ring	158- —	—	-1579	-1058	-1059	-1580	-1060	-1061	-1062	-1063	-1064
		1/2 NPTF	158- —	—	-1582	-1050	-1051	-1583	-1052	-1053	-1054	-1055	-1056
		Manifold*	158- —	—	-1585	-1066	-1067	-1586	-1068	-1069	-1070	-1071	-1072

158-1067

T Series Motors with Corrosion Protection

MOUNTING	SHAFT	PORT SIZE	DISPL. cm^3/r [in^3/r] / PRODUCT NUMBER										
			36 [2.2]	49 [3.0]	66 [4.0]	80 [4.9]	102 [6.2]	131 [8.0]	157 [9.6]	195 [11.9]	244 [14.9]	306 [18.7]	370 [22.6]
2 Bolt Flange	1 in. Straight w/ Woodruff Key	7/8 -14 O-Ring	158- —	—	—	1645	—	—	—	—	-1649	—	-1650
4 Bolt Flange		1/2 NPTF	158- —	—	—	—	—	—	—	—	-1620	—	-1621

158-1620

T Series Motors with Low Speed Valving

MOUNTING	SHAFT	PORT SIZE	DISPL. cm^3/r [in^3/r] / PRODUCT NUMBER										
			36 [2.2]	49 [3.0]	66 [4.0]	80 [4.9]	102 [6.2]	131 [8.0]	157 [9.6]	195 [11.9]	244 [14.9]	306 [18.7]	370 [22.6]
2 Bolt Flange	1 in. Straight w/Woodruff Key	7/8 -14 O-Ring	158- —	—	—	-1427	-1428	—	—	-1430	-1431	-1432	-1433
		1/2 NPTF	158- —	—	—	-1419	-1420	—	—	-1422	-1423	-1424	-1425
		Manifold*	158- —	—	—	—	—	—	—	—	—	—	—
	1 in. SAE 6B Splined	7/8 -14 O-Ring	158- —	—	—	-1525	—	—	—	—	-1675	—	—
		1/2 NPTF	158- —	—	—	—	-1634	—	—	—	—	—	—
4 Bolt Flange	1 in. Straight w/ Woodruff Key	Manifold*	158- —	—	—	-1522	-2678	—	—	—	—	—	-1527
		7/8 -14 O-Ring	158- —	—	-1625	-1410	-1411	-1626	-1412	-1413	-1414	-1415	-1416
		1/2 NPTF	158- —	—	-1644	-1402	-1403	—	-1404	-1405	-1406	-1407	-1408

158-1403

*Manifold product numbers shown are for motors with four 5/16 -18 port face mounting threads. Manifold, manifold mounting O-Rings and bolts are NOT included.

For T Series Motors with a configuration Not Shown in the charts above: Use the model code system on page B-4-10 to specify the product in detail.

T Series (158-)

Model Code

The following 30-digit coding system has been developed to identify all of the configuration options for the T motor. Use this model code to specify a motor with the desired features. All 30-digits of the code must be present when ordering. You may want to photocopy the matrix below to ensure that each number is entered in the correct box.

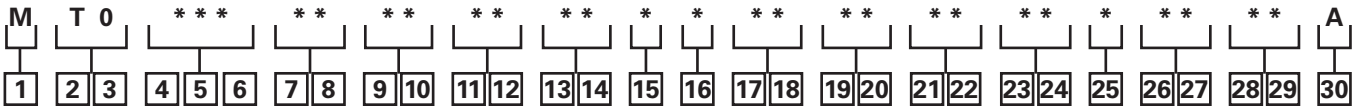

1 Product

M – Motor

2, 3 Product Series

T0 – T Series

4, 5, 6 Displacement cm³/r [in³/r]

022 – 35 [2.2]

030 – 49 [3.0]

040 – 65 [4.0]

049 – 80 [4.9]

062 – 102 [6.2]

080 – 131 [8.0]

096 – 158 [9.6]

119 – 195 [11.9]

149 – 244 [14.9]

187 – 306 [18.7]

226 – 370 [22.6]

7, 8 Mounting Type

AA – 2 Bolt (Standard) 82,6 [3.248] Dia. and 3,05 [.120] pilot, 13,59 [.535] Dia. Mounting Holes 106,35 [4.187] Dia. B.C.

BA – 4 Bolt (Standard) 44,40 [1.748] Dia. x 3,05 [.120] pilot, .375-16 UNC-2B Mounting Holes 82,55 [3.250] Dia. B.C.

CA – 2 Bolt (Standard) 82,50 [3.248] Dia. x 6,10 [.240] pilot, 10,41 [.410] Dia. Mounting Holes 106,35 [4.187] Dia. B.C. (SAE A)

DD – 2 Bolt (Std.) 101,60 [4.000] Dia. x 6.10 [.240] pilot, 14,35 [.565] Dia. Mounting Holes 146,05 [5.750] Dia. B.C. (SAE B) (Ductile)

EA – 4 Bolt Magneto 82,50 [3.248] Dia. x 3,05 [.120] Pilot, 13,59 [.535] Dia. Mounting Holes 106,35 [4.187] Dia. B.C.

FA – 4 Bolt (Standard) 44,40 [1.748] Dia. x 3,05 [.120] pilot, M10 x 1.5-6H Mounting Holes on 82,55 [3.250] Dia. B.C.

MA - 2 Bolt (Standard) 82.50 [3.248] Dia. x 8.13 [.320] Pilot, 13.59 [.535] Dia. Mounting Holes on 106.35 [4.187] Dia. B.C., w/o O-ring Groove

9, 10 Output Shaft Description

01 – 25,4 [1.00] Dia. Straight, Woodruff Key, .250-20 UNC-2B Hole in Shaft End

02 – 25,4 [1.00] Dia. SAE 6B Spline, .25-20 UNC-2B Hole in Shaft End

07 – 25,4 [1.00] Dia. Straight, 8,03 [.316] Dia. Crosshole 11,2 [.44] from End, 5,6 [.22] Extra Length

08 – 25,4 [1.00] Dia. Straight, 10,31 [.406] Dia. Crosshole 15,7 [.62] from End, .250-20 UNC-2B Hole in Shaft End

16 – 22,22 [.875] Dia. SAE 13 Tooth Spline (SAE B)

17 – 22,22 [.875] Straight Dia. 6,4 [2.5] x 19,0 [.75] Square Key (SAE B)

18 – 25,4 [1.00] Dia. Tapered, Woodruff Key and Nut, 34,92 [1.375] Taper Length

24 – 25.00 [.984] Dia. Straight, 8.0 [.315] Key, MB x 1.25-6H Hole in Shaft End

39 - 25.00 [.984] Dia. Straight (k6), 8.00 [.315] Key, M8 x 1.25-6H Hole in Shaft End

11, 12 Port Type

AA – .875-14 UNF-2B SAE O-Ring Ports

AB – .500-14 NPTF Dryseal Pipe Thread Ports

AC – Manifold (.3125-18 UNC-2B Mounting Holes)

AD – Manifold Ports (MB x 1.25-6H Mounting Holes)

AF – G 1/2 BSP Straight Thread Ports

13, 14 Case Flow Options

00 – None Specified

01 – .4375-20 UNF-2B SAE O-Ring Port (End Cap)

02 – G 1/4 BSP Straight Thread Port (End Cap)

03 – MANIFOLD CASE DRAIN

04 – .4375-20 UNF-2B SAE O-RING PORT (SIDE OF HOUSING)

05 – .3125-24 UNF-2B SAE O-RING PORT (MOUNTING FLANGE)

11 – Internal Check Valves

15 Geroler® Options

0 – None

A – Free Running

16 Shaft Options

0 – None

N – Electroless Nickel Plated

17, 18 Seal Options

00 – Standard Seals

02 – Seal Guard

03 – Viton Seals

04 – Viton Shaft Seal

07 – High Pressure Shaft Seal

11 – High pressure shaft seal, slinger seal

19 – Extreme duty seal guard

19, 20 Speed Sensor Options

00 – None

AA – 12 mm Digital Speed Pickup (15 Pulse) without Lead Wire

AB – Magnetic Speed Pickup (60 Pulse by Quadrature), No Lead Wire with M12 Connector (A=Power, B=Common, C=Signal)

21, 22 Valve Options

0 – None

23, 24 Special Features (Hardware)

00 – None Specified

AB – Low Speed Valving

SS – Stainless Steel Flange Bolts

25 Special Assembly Instructions

0 – None

A – Reverse Rotation

2 – Flange Rotation 90°

26, 27 Paint/Packaging Options

00 – No Paint

AA – Low Gloss Black Primer

AD – Environmental Coated Gloss White

28, 29 Customer ID/ Nameplate Options

0 – None Specified

30 Design Code

A – One (1)

Feature in **bold** are preferred and allow for shorter lead time.

T Series with Parking Brake (185-)

Highlights

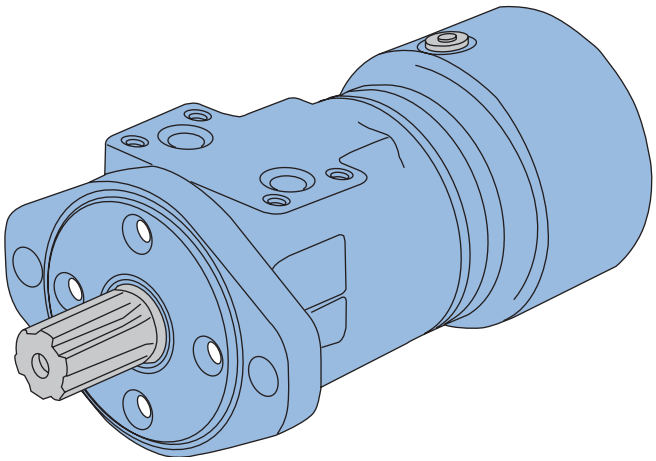

Description

Eaton's latest offering in LSHT motor technology is the new T Series Motor with Parking Brake.

T Series Motor with Parking Brake utilizes brake pads that rotate at 6 times the speed of the output shaft, thereby giving the brake a 6-to-1 mechanical advantage. The T Series Motor with Parking Brake utilizes the same Geroler, and Spool Valve technologies as the standard Char-Lynn motors. Therefore, in addition to providing dependable load-holding capability, T Series Motor with Parking Brake provides the same smooth, reliable operation, with similar performance, as the T Series Motor.

Specifications

Geroler Element	11 Displacements
Flow l/min [GPM]	55 [15] Continuous
	75 [20] Intermittent
Speed	Up to 1055 RPM
Pressure bar [PSI]	155 [2250] Cont.
	190 [2750] Inter.
Torque Nm [lb-in]	441 [3905] Cont.
	486 [4300] Inter.

Features

- Integrated, Compact, Patented Design
- Capability of Combining 4 inventory items into a single assembly (motor, brake, counter-balance valve, brake release line)
- Rear-mounted integrated brake with 6:1 torque advantage
- Access port for manual brake release (for over-riding brake in the event of loss of release pressure.)

Benefits

- Cost-effective Packaged System Solution
- Simplifies ordering and inventory requirements
- Reduces assembly labor
- Design Flexibility
- Wet brake is environmentally protected and provides long life

Applications

- Truck-Mounted Equipment (boom rotate and winch)
- Conveyors – Positioners – Indexers
- Marine Cranes (boom rotate and winch)
- Fishing Winches
- Recycling and Refuse Equipment
- Vehicle Recovery Winches
- Mining Equipment
- Specialty Utility Vehicles/ Machines
- Forestry Grapples
- Agricultural Equipment
- Railroad Equipment
- Airport Support Vehicles
- Lawn & Turf Equipment
- Anywhere Load-Holding is Needed in a Low-Speed High-Torque Drive System



Crane and winches



Boom Lift (Swing)



Maintenance Equipment

T Series with Parking Brake (185-)

Application Information

Principle of Operation

The wet brake is a spring-applied / pressure release design. Load-holding is applied by a mechanical spring and released by hydraulic pressure. The spring force holds the brake on when hydraulic pressure is absent.

Release Pressure

Release pressure is defined as the amount of pressure required to fully release the brake. The brake pressure cavity is common (shared) with the motor case. As a result, maximum release pressure is constrained by the motor case-pressure capability. The T Series Motor with Parking Brake incorporates a shaft seal capable up to 1500 psi (see page B-4-15). However, seal life is reduced at higher case pressure.

Residual Pressure

Residual pressure is the pressure trapped in the system by restrictions or long return lines.

Residual pressure in the motor case will lower the rated load holding torque of the brake.

Therefore, special attention needs to be given when applying this product. Keep in mind that long return lines create higher pressure that will reduce brake holding torque. In applications with high system pressures, the use of a pressure reducing valve to limit case and release pressure is recommended.

Holding Torque and Motor Output Torque

Holding torque is based on grade holding requirements for a vehicle or other load holding requirements in the application. System pressure and motor displacement are the factors in determining motor output torque. Motor displacement, measured in cubic centimeters or cubic inches, is the volume of fluid required to make one revolution. Motor output torque is the rotary force and is usually measured in inch pounds, newton meters or foot pounds. Maximum motor torque depends on pressure and motor displacement. Both output shaft size and shaft type can also affect motor torque. The T Series Motor with Parking Brake load holding capacity is factory set to match any limiting factor in each specific motor configuration (e.g. displacement, output shaft, etc).

Note:

Eaton Corporation does not approve any products for customer applications. It is the sole responsibility of the customer to qualify and verify the correct operation of products in their systems.

Note:

Special attention should be given to system back pressure. System back pressure directly affects brake release pressure and can cause the brake to release at undesired conditions.

Note:

The T Series with parking brake is not compatible with water based fluids.

Typical Applications

Winch

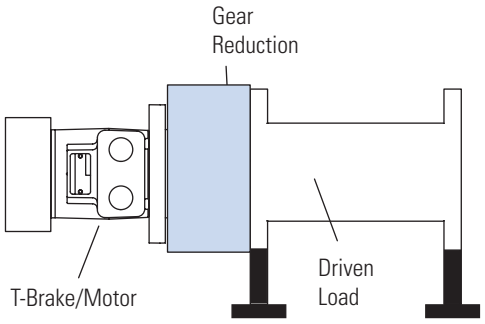

Machine Drive

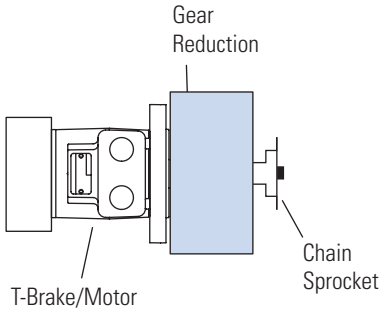

Swing Boom

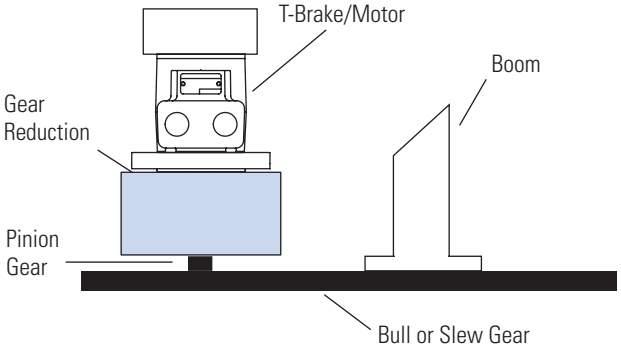

T Series with Parking Brake (185-)

Specifications

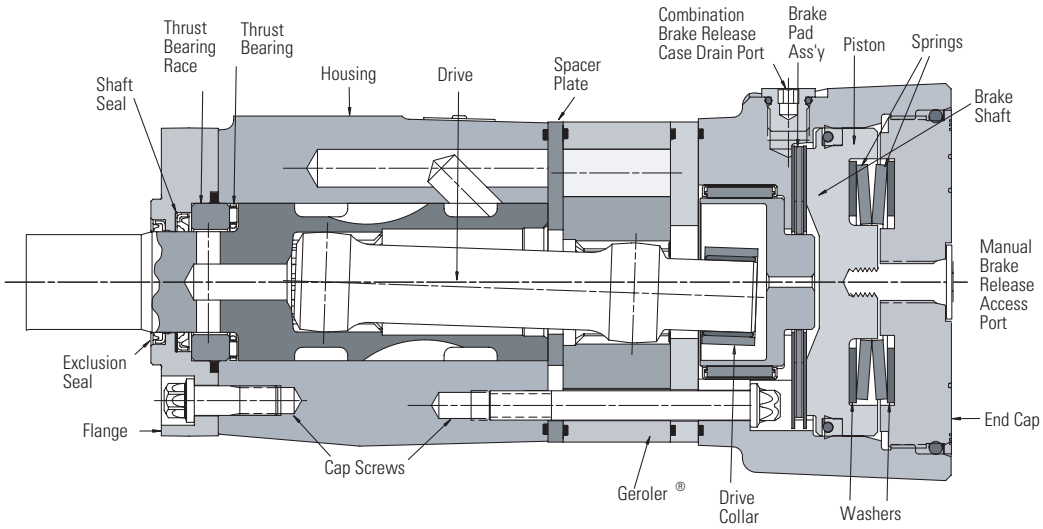

B-4

SPECIFICATION DATA — T SERIES WITH PARKING BRAKE MOTORS

Displ. cm³/r [in³/r]		36 [2.2]	49 [3.0]	66 [4.0]	80 [4.9]	102 [6.2]	131 [8.0]	157 [9.6]	195 [11.9]	244 [14.9]	306 [18.7]	370 [22.6]
Max. Speed (RPM) @ Continuous Flow		1021	906	849	694	550	426	355	287	229	183	152
Flow LPM [GPM]	Continuous	38 [10]	45 [12]	57 [15]	57 [15]	57 [15]	57 [15]	57 [15]	57 [15]	57 [15]	57 [15]	57 [15]
	Intermittent	38 [10]	57 [15]	68 [18]	76 [20]	76 [20]	76 [20]	76 [20]	76 [20]	76 [20]	76 [20]	76 [20]
Torque Nm [lb-in]	Continuous	76 [672]	105 [928]	138 [1222	174 [1541]	219 [1936]	251 [2226]	297 [2628]	359 [3178]	410 [3633]	441 [3905]	430 [3811]
	Intermittent **	93 [824]	118 [1131]	168 [1488]	212 [1872]	264 [2339]	307 [2718]	359 [3178]	437 [3864]	485 [4290]	483 [4275]	486 [4300]
Pressure Δ Bar [Δ PSI]	Continuous *	155 [2250]	155 [2250]	155 [2250]	155 [2250]	155 [2250]	138 [2000]	138 [2000]	138 [2000]	127 [1850]	110 [1600]	90 [1300]
	Intermittent * **	190 [2750]	190 [2750]	190 [2750]	190 [2750]	190 [2750]	172 [2500]	172 [2500]	172 [2500]	155 [2250]	124 [1800]	103 [1500]

Note:

See page B-4-2 for additional motor specification notes and definitions. The T Series with Parking Brake performance is similar to the standard T Series motor. High speed conditions may reduce performance on T Series with Parking Brake.

T SERIES BRAKE HOLDING TORQUE SETTINGS:

Shaft Code	Output Shaft Description [in³/r]	2.2	3.0	4.0	4.9	6.2	8.0	9.6	11.9	14.9	18.7	22.6
18	1 Tapered w/key and nut	2,000	2,000	2,000	3,500	3,500	3,500	5,000	5,000	5,000	5,000	5,000
02	1 SAE 6B Splined	2,000	2,000	2,000	3,500	3,500	3,500	5,000	5,000	5,000	5,000	5,000
24	25mm Straight w/key	2,000	2,000	2,000	3,500	3,500	3,500	3,500	3,500	3,500	3,500	3,500
01	1 Straight w/key	2,000	2,000	2,000	3,500	3,500	3,500	3,500	3,500	3,500	3,500	3,500
07	1 Straight w/.31 dia. crosshole	2,000	2,000	2,000	3,500	3,500	3,500	3,500	3,500	3,500	3,500	3,500
08	1 Straight w/.40 dia. crosshole	2,000	2,000	2,000	3,500	3,500	3,500	3,500	3,500	3,500	3,500	3,500
16	7/8 SAE B 13T Splined	2,000	2,000	2,000	2,000	2,000	2,000	2,000	2,000	2,000	2,000	2,000
17	7/8 SAE B Straight w/key	2,000	2,000	2,000	2,000	2,000	2,000	2,000	2,000	2,000	2,000	2,000

in-lbs Full Capacity Brake

in-lbs Limited Capacity Brake

Note:

The factory setting values are used for each motor based on motor displacement and shaft type. Average Static torque may vary +/- 14% from rated values.

T Series with Parking Brake (185-)

Dimensions

(Refer to pages B-4-19 thru B-4-22 for shaft and port dimensions.)

Standard Rotation Viewed from Shaft End

Port A Pressurized — CW
Port B Pressurized — CCW

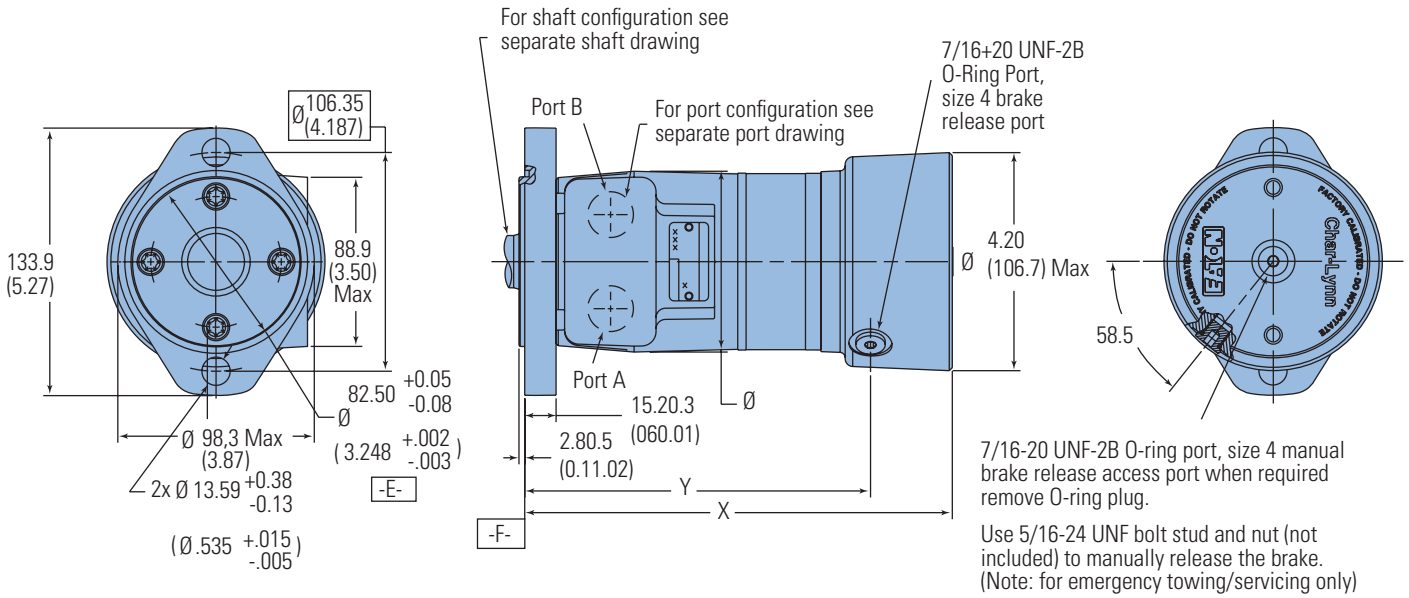

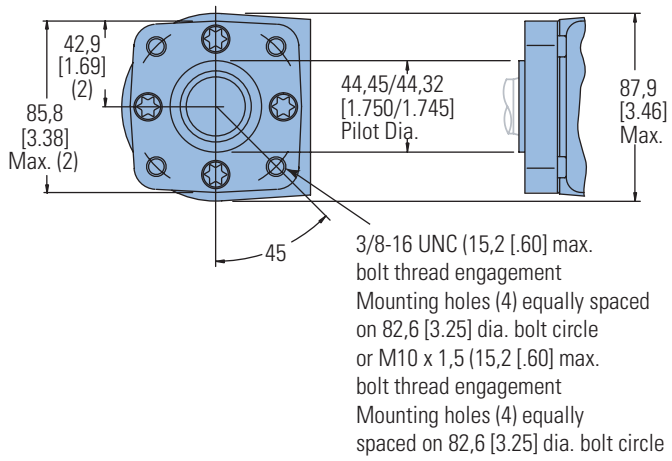

T-SERIES WITH PARKING BRAKE DIMENSIONS

Displacement cm^3/r [in^3/r]	X mm [inch]	Y mm [inch]
36 [2.2]	190.2 [7.49]	143.9±0.9 [5.66±0.3]
41 [2.5]	190.8 [7.51]	144.5±0.9 [5.69±0.3]
49 [3.0]	192.5 [7.58]	146.3±0.9 [5.76±0.3]
5.9 [3.6]	194.3 [7.65]	148.1±0.9 [5.83±0.3]
65 [4.0]	195.6 [7.70]	149.3±0.9 [5.88±0.3]
80 [4.9]	198.4 [7.81]	152.0±0.9 [5.98±0.3]
102 [6.2]	202.2 [7.96]	155.9±0.9 [6.14±0.3]
131 [8.0]	207.5 [8.17]	161.3±0.9 [6.35±0.3]
158 [9.6]	212.6 [8.37]	166.2±0.9 [6.54±0.3]
195 [11.9]	219.2 [8.63]	172.9±0.9 [6.81±0.3]
244 [14.9]	228.3 [8.99]	181.9±0.9 [7.16±0.3]
306 [18.7]	239.5 [9.43]	193.3±0.9 [7.61±0.3]
370 [22.6]	251.2 [9.89]	205.0±0.9 [8.07±0.3]

Note:

Standard Rotation
When facing shaft end of motor shaft to rotate clockwise when port "A is pressurized, counterclock-wise when port "B is pressurized

Reverse Rotation
When facing shaft end of motor shaft will rotate clockwise when port "B is pressurized, counterclock-wise when port "A is pressurized

T Series with Parking Brake (185-)

Brake Release and Motor Case Pressure

The T Series Motor with Parking Brake is durable and has long life as long as the recommended case pressure is not exceeded. Allowable case pressure is highest at low shaft speeds.

Motor life will be shortened if case pressure exceeds recommended ratings (acceptability may vary with application).

Refer to the Case Pressure/ Shaft Seal chart below. This chart is based on case pressure and motor shaft speed. A minimum release pressure of 17 Bar [250 PSI] must be maintained to fully release the brake.

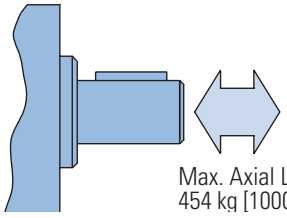

Max. Axial Loads
454 kg [1000 lb]

$P_C \approx .6\ DP + P_2$

P_C = Case Pressure
P_1 = Inlet Line Pressure
P_2 = Back Pressure
$DP = P_1 - P_2$

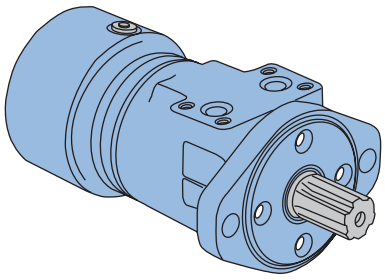

Case Pressure/Shaft Seal

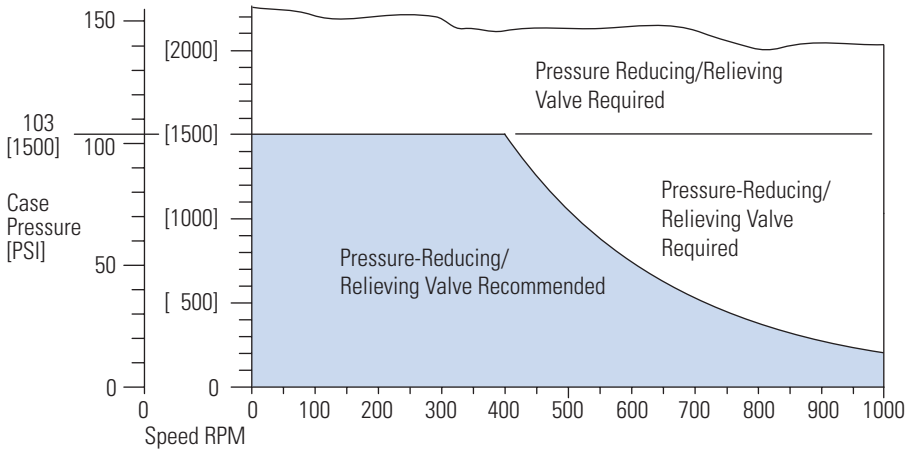

T Series with Parking Brake (185-)

Product Numbers

Use digit prefix — 185 plus four digit number from charts for complete product number — Example 185-2068.

Orders will not be accepted without three digit prefix.

Standard Valving

MOUNTING	SHAFT	PORT SIZE	DISPL. cm^3/r [in^3/r] / PRODUCT NUMBER									
			3.0	4.0	4.9	6.2	8.0	9.6	11.9	14.9	18.7	22.6
2-Bolt	1 Keyed	7/8-14 O-Ring Manifold	185-2000 185-2010	2001 2011	2002 2012	2003 2013	2004 2014	2005 2015	2006 2016	2007 2017	2008 2018	2009 2019
	6B Splined	7/8-14 O-Ring Manifold	185-2020 185-2030	2021 2031	2022 2032	2023 2033	2024 2034	2025 2035	2026 2036	2027 2037	2028 2038	2029 2039
	13T Splined 16/32 pitch	7/8-14 O-Ring Manifold	185-2040 185-2050	2041 2051	2042 2052	2043 2053	2044 2054	2045 2055	2046 2056	2047 2057	2048 2058	2049 2059
4-Bolt	1 Keyed	7/8-14 O-Ring Manifold	185-2060 185-2070	2061 2071	2062 2072	2063 2073	2064 2074	2065 2075	2066 2076	2067 2077	2068 2078	2069 2079
	6B Splined	7/8-14 O-Ring Manifold	185-2080 185-2090	2081 2091	2082 2092	2083 2093	2084 2094	2085 2095	2086 2096	2087 2097	2088 2098	2089 2099
	13T Splined 16/32 pitch	7/8-14 O-Ring Manifold	185-2100 185-2110	2101 2111	2102 2112	2103 2113	2104 2114	2105 2115	2106 2116	2107 2117	2108 2118	2109 2119
2-Bolt SAE B	1 Keyed	7/8-14 O-Ring Manifold	185-2120 185-2130	2121 2131	2122 2132	2123 2133	2124 2134	2125 2135	2126 2136	2127 2137	2128 2138	2129 2139
	6B Splined	7/8-14 O-Ring Manifold	185-2140 185-2150	2141 2151	2142 2152	2143 2153	2144 2154	2145 2155	2146 2156	2147 2157	2148 2158	2149 2159
	13T Splined 16/32 pitch	7/8-14 O-Ring Manifold	185-2160 185-2170	2161 2171	2162 2172	2163 2173	2164 2174	2165 2175	2166 2176	2167 2177	2168 2178	2169 2179

Low Speed Valving

MOUNTING	SHAFT	PORT SIZE	DISPL. cm^3/r [in^3/r] / PRODUCT NUMBER									
			3.0	4.0	4.9	6.2	8.0	9.6	11.9	14.9	18.7	22.6
2-Bolt	1 Keyed	7/8-14 O-Ring Manifold	185-2180 185-2190	2181 2191	2182 2192	2183 2193	2184 2194	2185 2195	2186 2196	2187 2197	2188 2198	2189 2199
	6B Splined	7/8-14 O-Ring Manifold	185-2200 185-2210	2201 2211	2202 2212	2203 2213	2204 2214	2205 2215	2206 2216	2207 2217	2208 2218	2209 2219
	13T Splined 16/32 pitch	7/8-14 O-Ring Manifold	185-2220 185-2230	2221 2231	2222 2232	2223 2233	2224 2234	2225 2235	2226 2236	2227 2237	2228 2238	2229 223
4-Bolt	1 Keyed	7/8-14 O-Ring Manifold	185-2240 185-2250	2241 2251	2242 2252	2243 2253	2244 2254	2245 2255	2246 2256	2247 2257	2248 2258	2249 2259
	6B Splined	7/8-14 O-Ring Manifold	185-2260 185-2270	2261 2271	2262 2272	2263 2273	2264 2274	2265 2275	2266 2276	2267 2277	2268 2278	2269 2279
	13T Splined 16/32 pitch	7/8-14 O-Ring Manifold	185-2280 185-2290	2281 2291	2282 2292	2283 2293	2284 2294	2285 2295	2286 2296	2287 2297	2288 2298	2289 2299
2-Bolt SAE B	1 Keyed	7/8-14 O-Ring Manifold	185-2300 185-2310	2301 2311	2302 2312	2303 2313	2304 2314	2305 2315	2306 2316	2307 2317	2308 2318	2309 2319
	6B Splined	7/8-14 O-Ring Manifold	185-2320 185-2330	2321 2331	2322 2332	2323 2333	2324 2334	2325 2335	2326 2336	2327 2337	2328 2338	2329 2339
	13T Splined 16/32 pitch	7/8-14 O-Ring Manifold	185-2340 185-2350	2341 2351	2342 2352	2343 2353	2344 2354	2345 2355	2346 2356	2347 2357	2348 2358	2349 2359

185-2357

Motors with the low speed valving option enable very smooth low speed operation while maintaining high torque.

Designed to run continuously at up to 200 RPM at standard rated pressures and reduced flows, this option provides smooth operation at low speeds. Furthermore, they resist slippage and have more momentary load holding ability than the standard motors.

Motors with this valving are not intended for low pressure applications (A minimum of 300 psi delta must be maintained between A port pressure and case pressure).

Shaft side / radial load ratings are not affected by this valving.

For a T Series motor with parking brake configuration not shown in the charts above use the model code system on page B-4-17 to specify the product in detail.

T Series with Parking Brake (185-)

Model Code

The following 30-digit coding system has been developed to identify all of the configuration options for the T Series Motor with Parking Brake. Use this model code to specify a motor with the desired features. All 30-digits of the code must be present when ordering. You may want to photocopy the matrix below to ensure that each number is entered in the correct box.

M	T	B	*	*	*	*	*	*	*	*	*	*	*	*	*	*	*	*	*	*	*	*	*	*	*	*	B
1	2	3	4	5	6	7	8	9	10	11	12	13	14	15	16	17	18	19	20	21	22	23	24	25	26	27	28	29	30

1 Product

M – **Motor**

2, 3 Series

T B –T Series Motor with Parking Brake

4, 5, 6 Displacement cm^3/r [in^3/r]

022 – 36 [2.2]

030 – 49 [3.0]

040 – 66 [4.0]

049 – 80 [4.9]

062 – 102 [6.2]

080 – 131 [8.0]

096 – 157 [9.6]

119 – 195 [11.9]

149 – 244 [14.9]

187 – 306 [18.7]

226 – 370 [22.6]

7, 8 Mounting Type

AA – 2 Bolt (Standard) 82,5 [3.248] Dia. and 3,05 [.120] pilot, 13,59 [.535] Dia. Mounting Holes 106,35 [4.187] Dia. B.C.

BA – 4 Bolt (Standard) 44,40 [1.748] Dia. x 3,05 [.120] pilot, .375-16 UNC-2B Mounting Holes 82,55 [3.250] Dia. B.C.

CA – 2 Bolt (Standard) 82,50 [3.248] Dia. x 6,10 [.240] pilot, 10,41 [.410] Dia. Mounting Holes 106,35 [4.187] Dia. B.C. (SAE A)

DA – 2 Bolt (Std.) 101,60 [4.000] Dia. x 6.10 [.240] pilot, 14,35 [.565] Dia. Mounting Holes 146,05 [5.750] Dia. B.C. (SAE B)

EA – 4 Bolt Magneto 82,50 [3.248] Dia. x 3,05 [.120] Pilot, 13,59 [.535] Dia. Mounting Holes 106,35 [4.187] Dia. B.C.

FA – 4 Bolt (Standard) 44,40 [1.748] Dia. x 3,05 [.120] pilot, M10 x 1.5-6H Mounting Holes on 82,55 [3.250] Dia. B.C.

9, 10 Output Shaft Description

01 – 25,4 [1.00] Dia. Straight, Woodruff Key, .250-20 UNC-2B Hole in Shaft End

02 – 25,4 [1.00] Dia. SAE 6B Spline, .25-20 UNC-2B Hole in Shaft End

16 – SAE 13 Tooth Spline, 16/32 Pitch, 21,74 (.856) Dia. (SAE B)

18 – 25,4 [1.00] Dia. Tapered, Woodruff Key and Nut, 34,92 [1.375] Taper Length

24 – 25.00 [.984] Dia. Straight, 8.0 [.315] Key, MB x 1.25-6H Hole in Shaft End

11, 12 Port Type

AA – .875-14 UNF-2B SAE O-Ring Ports

AB – .500-14 NPTF Dryseal Pipe Thread Ports

AC – Manifold (.3125-18 UNC-2B Mounting Holes)

AD – Manifold Ports (MB x 1.25-6H Mounting Holes)

AF - G 1/2 BSP Straight Thread Ports

13, 14 Case Flow Options

00 – None Specified

02 – G 1/4 BSP Straight THD Port (End Cap)

03 – Manifold Case Drain

04 – .4375-20 UNF-2B SAE O-RING PORT (SIDE OF HOUSING)

05 – .3125-24 UNF-2B SAE O-RING PORT (MOUNTING FLANGE)

11 - Internal Check Valves

15 Geroler® Options

A – Standard

B – Free Running

16 Shaft Options

0 – None

N – Electroless Nickel Plated

17, 18 Seal Options

00 – Standard Seals

02 – Seal Guard

03 – Viton Seals

04 – Viton Shaft Seal

07 – High Pressure Shaft Seal

11 – High pressure shaft seal, slinger seal

19 – Extreme duty seal guard

19, 20 Speed Sensor Options

00 – None

AA – 12 mm Digital Speed Pickup (15 Pulse) without Lead Wire

21, 22 Valve Options

0 – None

23, 24 Special Features (Hardware)

00 – None Specified

AB – Low Speed Valving

25 Special Assembly Instructions

0 – None

2 – Flange Rotation 90°

26, 27 Paint/Packaging Options

00 – No Paint

AA – Low Gloss Black Primer

28, 29 Customer ID/ Nameplate Options

0 – None Specified

30 Design Code

B – Two (2)

Feature in **bold** are preferred and allow for shorter lead time.

Case Pressure and Case Drain — H, S, and T Series

Char-Lynn H Series, S Series and T Series motors are durable and have long life as long as the recommended case pressure is not exceeded. Allowable case pressure is highest at low shaft speeds. Consequently, motor life will be shortened if case pressure exceeds these ratings (acceptability may vary with application). Determine if an external case drain is required from the case pressure seal limitation chart below — chart based on case pressure and shaft speed. If a case drain line is needed, connect drain line to assure that the motor will always remain full of fluid. A pressure restriction should be added to the case drain line, during which a motor case pressure of 3,5 Bar [50 PSI] is maintained.

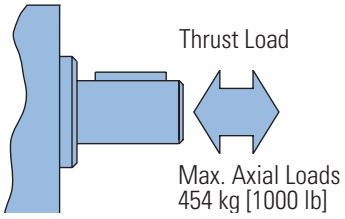

$$P_C \approx .6\,\Delta P + P_2$$

P_C = Case Pressure
P_1 = Inlet Line Pressure
P_2 = Back Pressure
$\Delta P = P_1 - P_2$

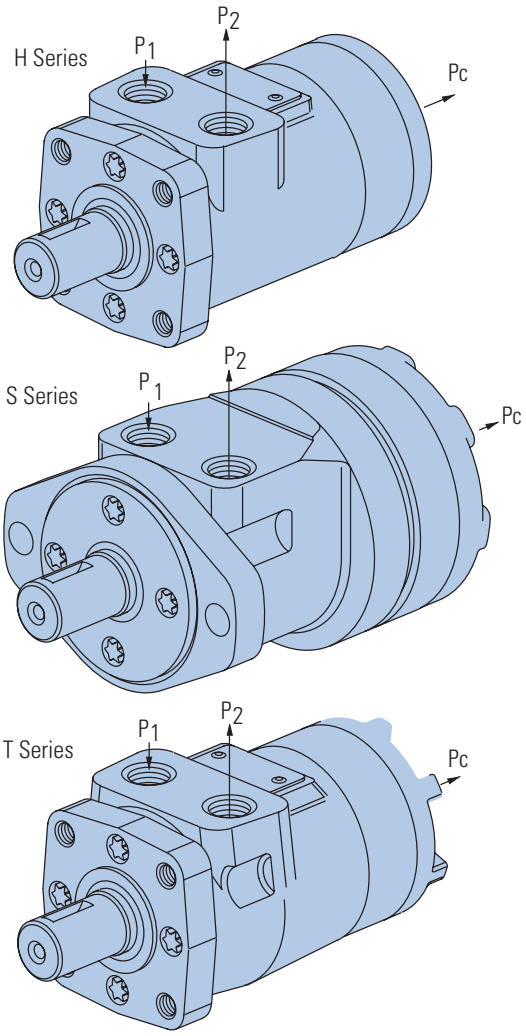

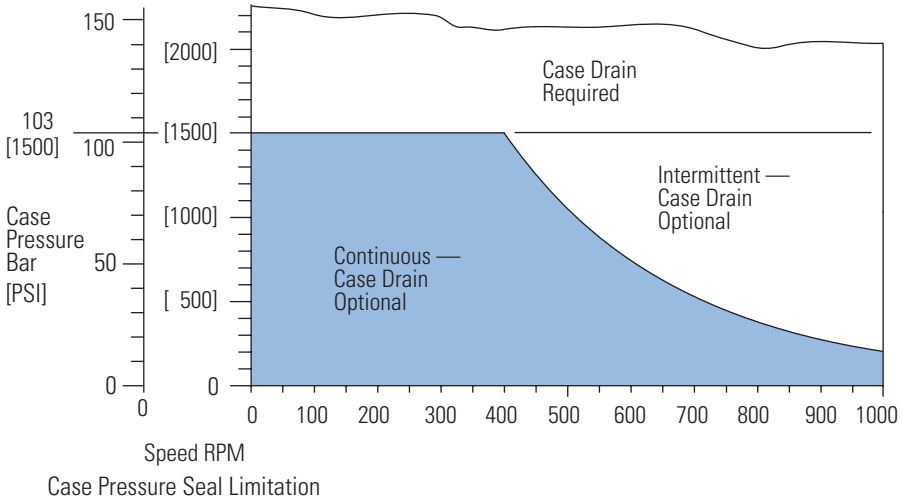

Case Pressure Seal Limitation

H, S and T Series
(101-, 103-, 158-, 185-)

Side Load Capacity

The hydrodynamic bearing has infinite life when shaft load ratings are not exceeded. Hence, the shaft side load capacity is more than adequate to handle most externally applied loads (such as belts, chains, etc.), providing the motor to shaft size is applied within its torque rating.

Allowable side load chart, shaft load location drawing and load curves (below) are based on the side / radial loads being applied to shaft at locations A, B, and C, to determine the shaft side load capacity at locations other than those shown use the formula (shown below).

For more information about shaft side loads on Char-Lynn motors contact your Eaton representative.

Note:

When the speed sensor option is used, side load ratings are reduced 25%.

RPM	ALLOWABLE SHAFT SIDE LOAD — KG [LB]		
	A	B	C
900	154 [339]	136 [300]	118 [261]
625	205 [452]	181 [400]	158 [348]
500	256 [565]	227 [500]	197 [435]
400	307 [678]	272 [600]	237 [522]
300	410 [904]	363 [800]	316 [696]
200	718 [1582]	635 [1400]	552 [1216]

$$\text{Sideload P kg} = \frac{900}{N}\left(\frac{16800}{L + 96{,}3}\right) \quad \text{for 200-900 RPM}$$

$$\text{Sideload P [lb]} = \frac{900}{N}\left(\frac{1460}{L + [3.79]}\right) \quad \text{for 200-900 RPM}$$

Where N = Shaft Speed (RPM)

L = Distance from Mounting Surface

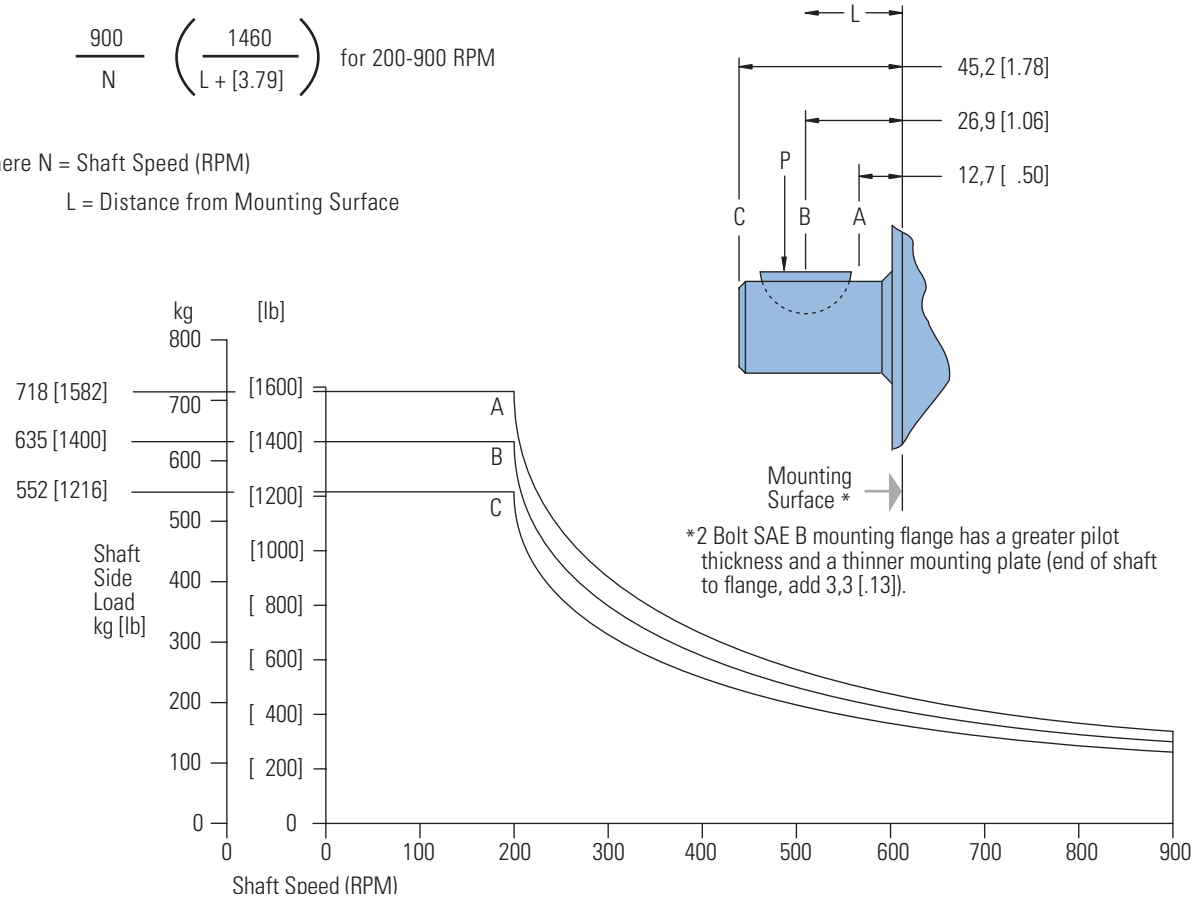

*2 Bolt SAE B mounting flange has a greater pilot thickness and a thinner mounting plate (end of shaft to flange, add 3,3 [.13]).

H, S and T Series
(101, 103- 158, 185)

Dimensions

Shafts

Shaft Size Motor Torque Combination Limit Guide

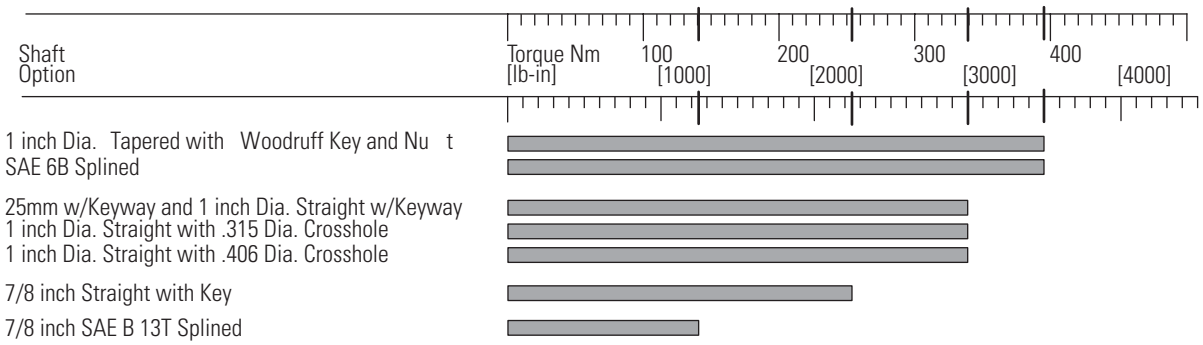

1 in. Dia. Straight with Woodruff Key

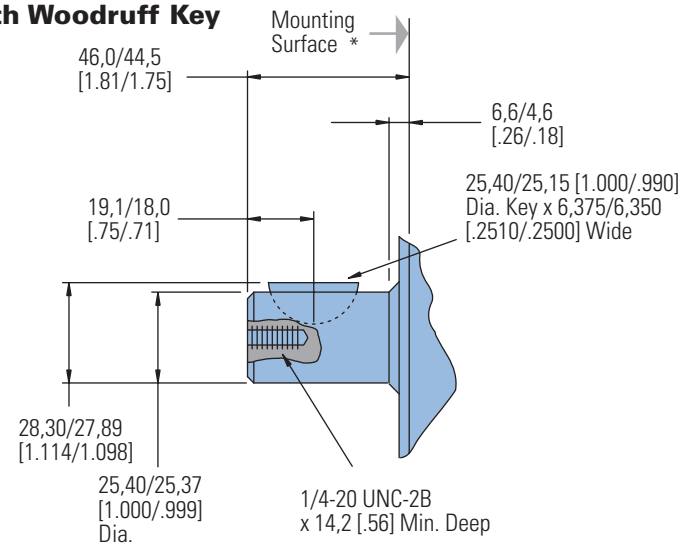

SAE 6B Splined Shaft

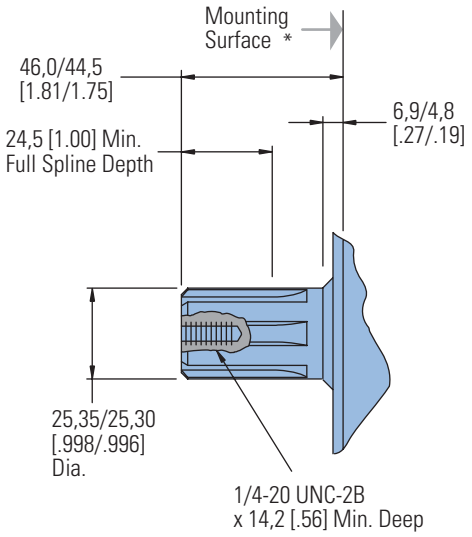

1 in. Dia. Straight Shaft with .315 Dia. Crosshole

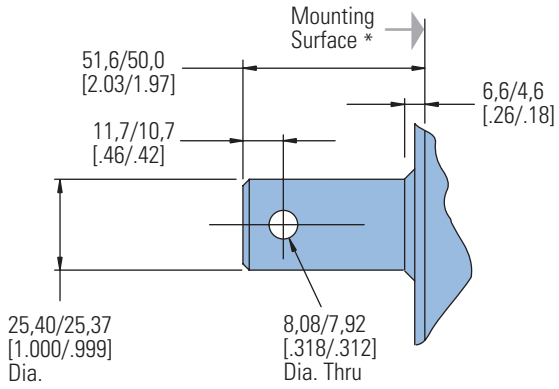

1 in. Dia. Straight Shaft with .406 Dia. Crosshole

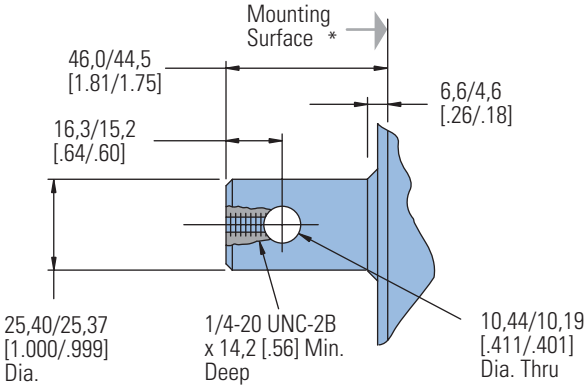

* 2 Bolt SAE B mounting flange has a greater pilot thickness and a thinner mounting plate (end of shaft to flange, add 3,3 [.13]).

1 in. Dia. Tapered Shaft with Woodruff Key and Nut

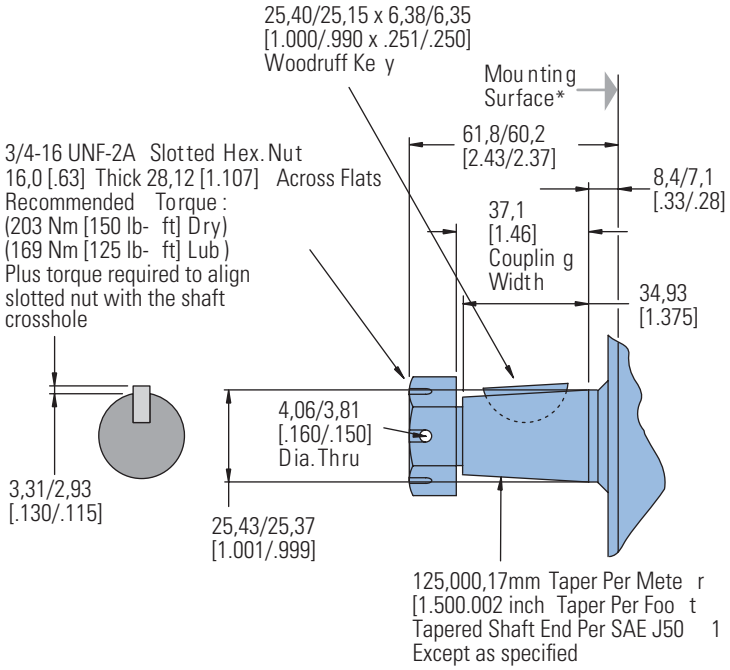

25mm Dia. Straight Shaft with 8mm Keyway

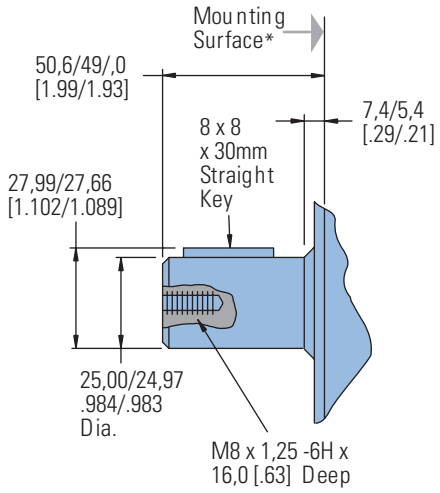

7/8 in. Dia. Straight Shaft with Key

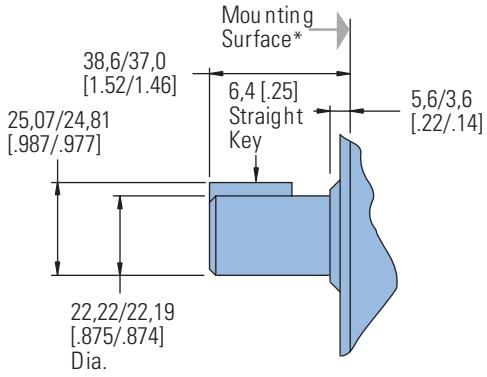

7/8 in. Dia. SAE B Shaft 13 T Spline d

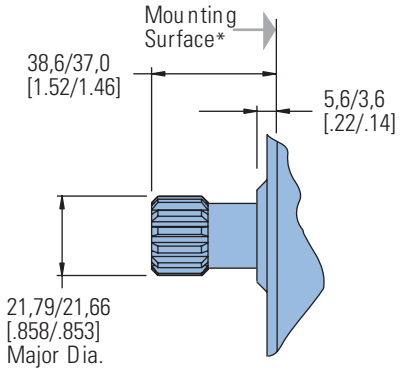

* 2 Bolt SAE B mounting flange has a greater pilot thickness and a thinner mounting plate (end of shaft to flange, add 3,3 [.13]).

H, S and T Series
(101-, 103- 158-, 185-)

Mounting Options

Note:

Mounting Surface Flatness Requirement is ,13 mm [.005 inch] Max.

4 Bolt Magneto

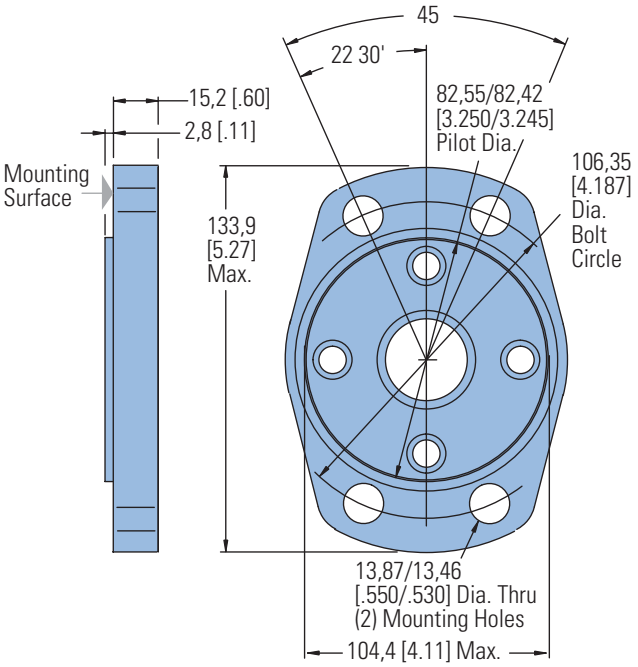

2 Bolt SAE B

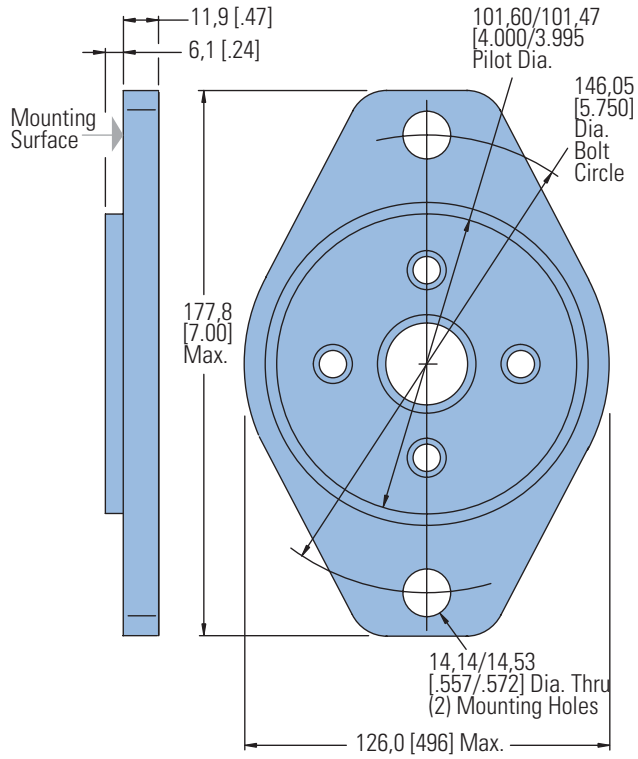

Base Bock Mounting Kits

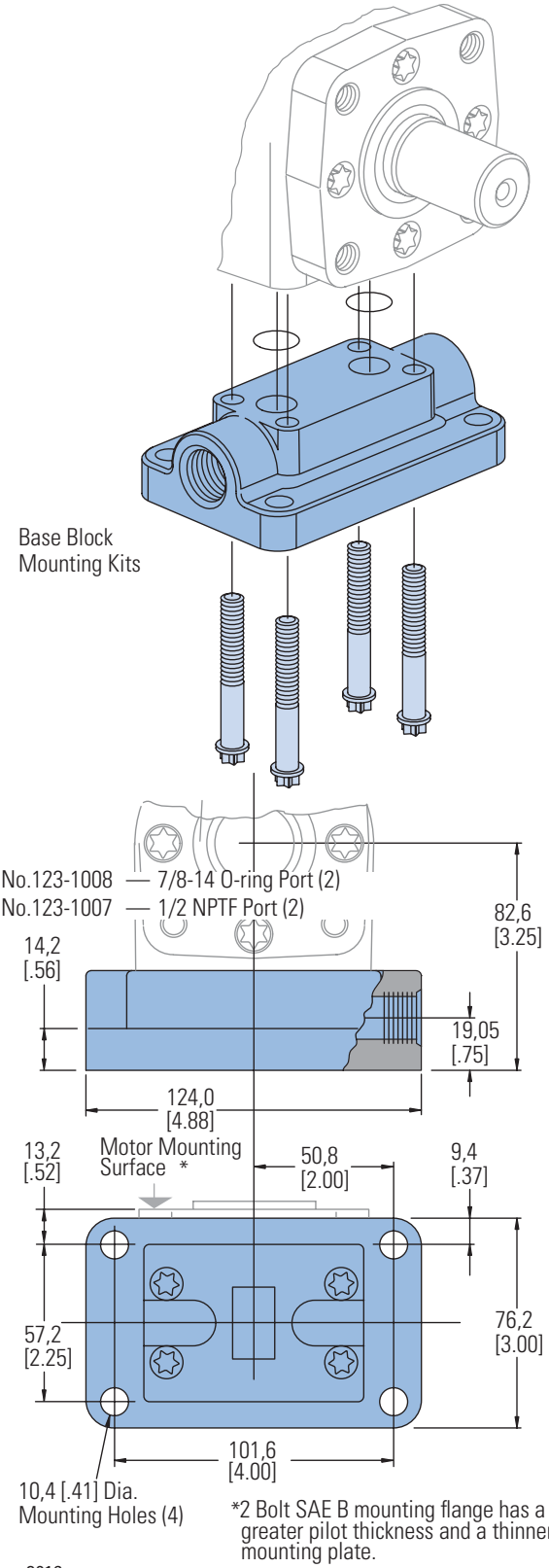

*2 Bolt SAE B mounting flange has a greater pilot thickness and a thinner mounting plate.

H, S and T Series (101-, 103-, 158-, 185-)

Dimensions

Ports

Ports

End Ports — H Series only

G 1/2 (BSP) (2)

or 3/4-16 O-Ring (2)

Standard Rotation Viewed from Drive End

Port A Pressurized — CW

Port B Pressurized — CCW

Note:

End ported motor pressure is derated. Reference page B-2-2 for ratings.

7/8-14 ports

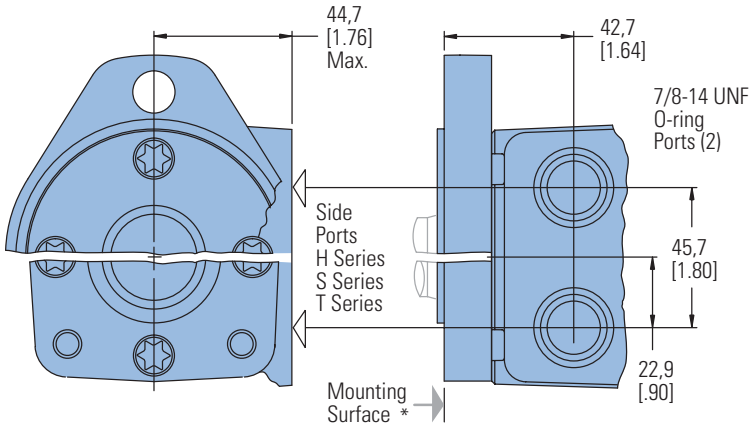

End Ports (H Series only)

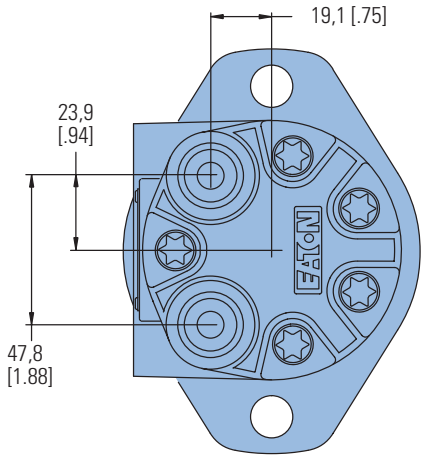

Use of Teflon Tape Sealant/ Lubricant (with 1/2 14 NPTF Port Connectors only).

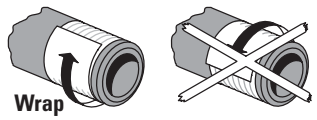

When using fittings with Teflon tape, be careful when taping and tightening. Over tightening or improperly taped fittings can cause damage to housing or leakage.

Use the following procedures:

- Wrap approx. 1 1/2 Turns of 13 mm [1/2 in.] wide Teflon Tape around fitting threads — start tape 2 threads up from end of fitting.
- Tighten threads to a Maximum of 34 Nm [25 lb-ft]. — Do Not Tighten Further —
- If fittings leak when tightened to maximum torque, either retape, reseal, or replace fittings.

6-1/2 or 1/2 NPTF ports

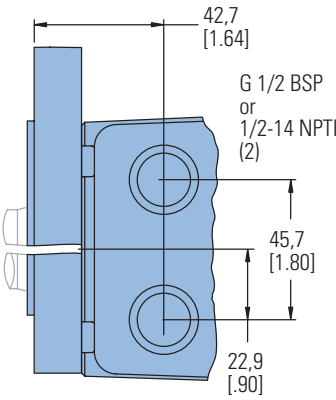

Manifold Ports

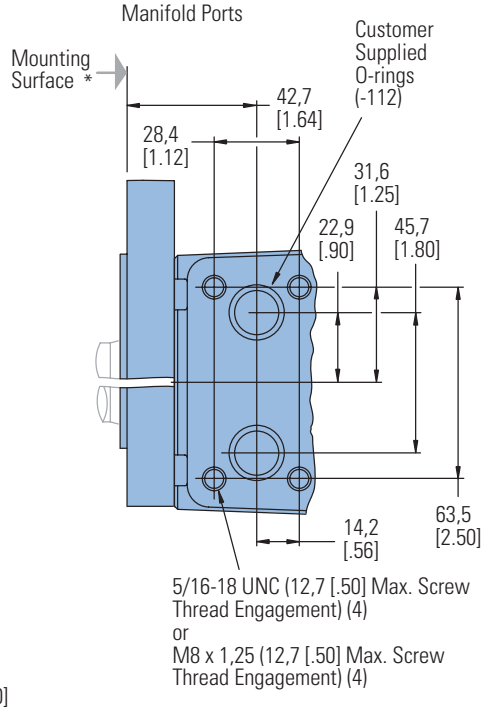

Manifold Ports w/manifold case port

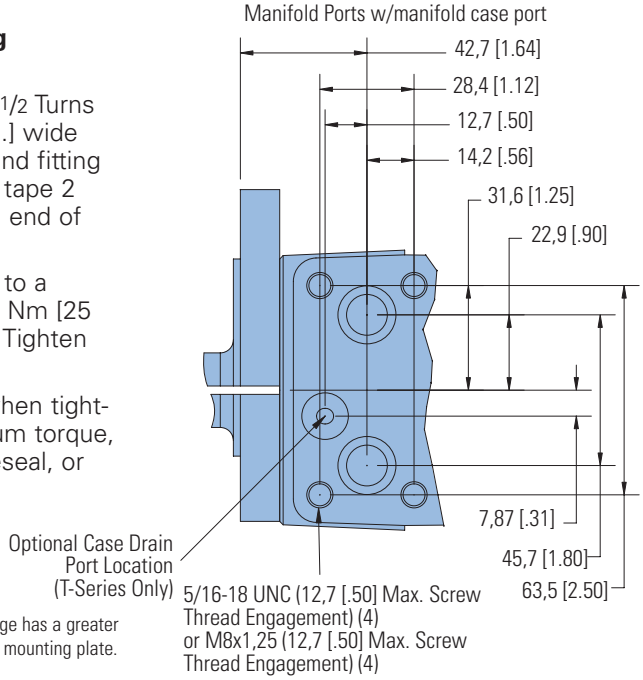

Note:

End ported motor option is derated to 1400 continuous, 1700 psi intermittent.

*2 Bolt SAE B mounting flange has a greater pilot thickness and a thinner mounting plate.

Notes

W Series (162-)

Highlights

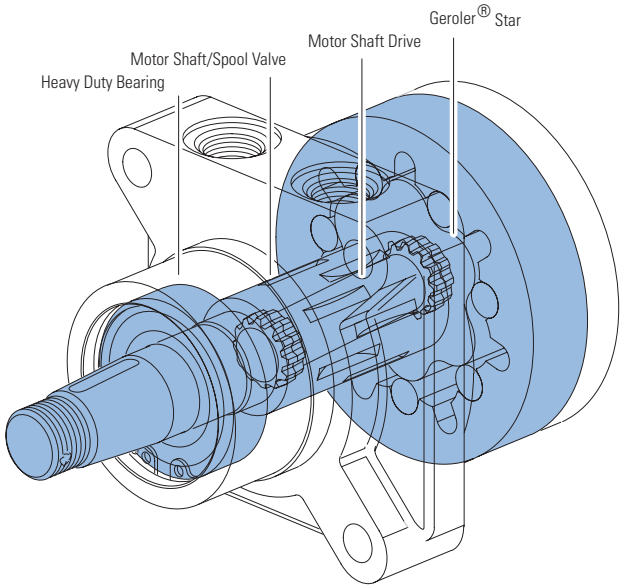

Description

Char-Lynn W Series motors with the Geroler displacement element offer the same low friction and long-life advantages as the S and T Series.

The W Series features the simplicity of Eaton's proven spool valve and a Geroler element that provides superior drive life and smooth performance. In addition, this motor has a rugged housing with an extra large capacity side load bearing.

W Series Motors

Geroler Element	7 Displacements
Flow l/min [GPM]	68 [18] Continuous***
	76 [20] Intermittent**
Speed	288 RPM
Pressure bar [PSI]	165 [2400] Cont.***
	179 [2600] Inter.**
Torque Nm [lb-in]	410 [3624] Cont.***
	562 [4970] Inter.**

*** Continuous— (Cont.) Continuous rating, motor may be run continuously at these ratings.
** Intermittent— (Inter.) Intermittent operation, 10% of every minute.

Features:

- Heavy duty bearing
- Wheel drive interface
- Three-pressure zone design (ability to reduce case pressure)
- Variety of displacements, shafts, mounts and special options
- Special options to meet customer needs

Benefits:

- High side-load capacity
- High shock load capability
- Wheel mount interface
- Compact powerful package
- High efficiency
- Smooth low-speed operation
- Extended leak-free performance

Applications:

- Scissors lifts
- Boom lifts
- Mid-size ZTR mowers
- Turf equipment
- Greens mowers
- Sand trap rakes
- Railroad maintenance equipment
- Industrial sweepers and floor polishers
- Skid steer attachments
- Many more


Scissor Lift


Sweeper


Trencher


Boom Lift

W Series (162-)

Specifications

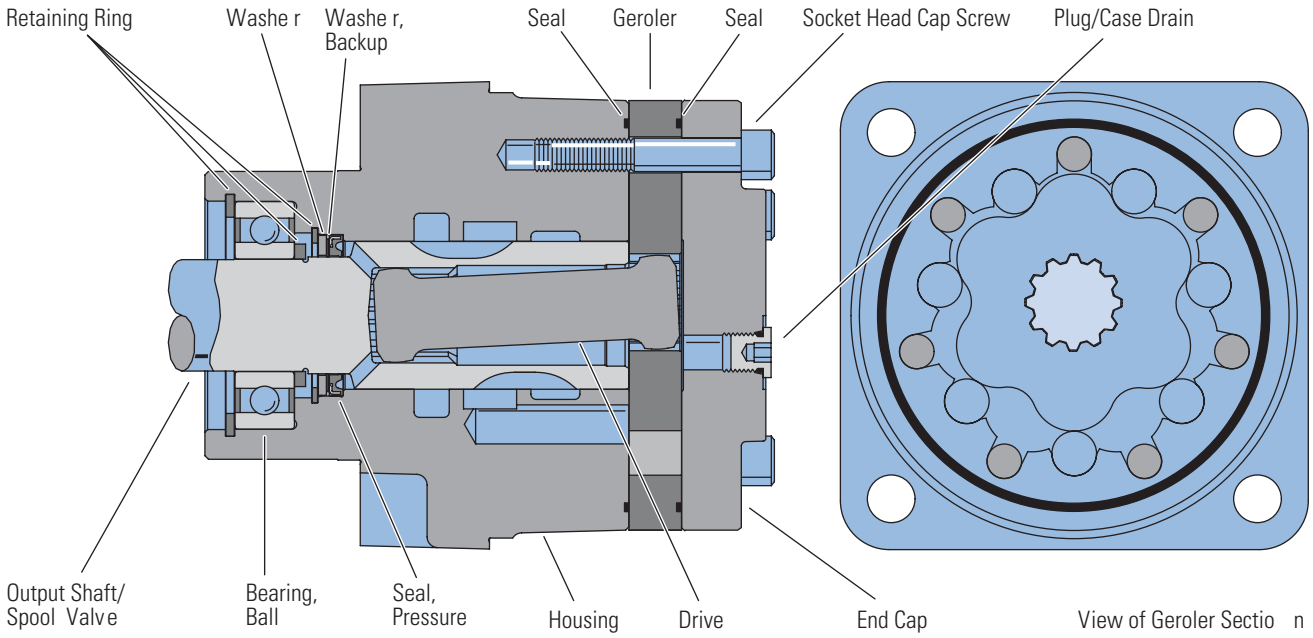

SPECIFICATION DATA — W SERIES MOTORS

Displ. cm^3/r [in^3/r]		80 [4.9]	126 [7.7]	154 [9.4]	195 [11.9]	251 [15.3]	303 [18.5]	374 [22.8]
Max. Speed (RPM)		267	288	214	200	200	200	200
Flow l/min [GPM]	Continuous	23 [6]	30 [8]	34 [9]	38 [10]	53 [14]	62 [16.5]	68 [18]
	Intermittent	23 [6]	30 [8]	34 [9]	38 [10]	53 [14]	62 [16.5]	76 [20]
Theo. Torque Nm [lb-in]	Continuous	176 [1555]	279 [2470]	318 [2813]	318 [2816]	375 [3319]	387 [3429]	410 [3624]
	Intermittent	189 [1676]	298 [2640]	373 [3301]	439 [3882]	548 [4849]	539 [4769]	562 [4970]
Pressure Δbar [ΔPSI]	Continuous	165 [2400]	165 [2400]	152 [2200]	124 [1800]	110 [1600]	97 [1400]	83 [1200]
	Intermittent	179 [2600]	179 [2600]	179 [2600]	179 [2600]	165 [2400]	138 [2000]	124 [1800]

Note:

To assure best motor life, run motor for approximately one hour at 30% of rated pressure before application to full load. Be sure motor is filled with fluid prior to any load applications.

Maximum Inlet Pressure:

179 bar [2600 PSI]

Do Not Exceed Δ Pressure Rating (for displacement size see chart above).

Return Pressure (Back-Pressure):

Do not exceed Δ pressure rating (see chart above). Case drain required.

Note:

Optional version can be used without case drain.

Case Pressure:

Minimum – No Pressure

Maximum – 103 bar [1500 PSI] without case drain.

Note:

The case must be flooded when the motor is operating.

Δ Pressure:

The true Δ bar [Δ PSI] between inlet port and return port

Continuous Rating:

Motor may be run continuously at these ratings

Intermittent Operation:

10% of every minute

Recommended Fluids:

Premium quality, anti-wear type hydraulic oil with a viscosity of not less than 70 SUS at operating temperature.

Recommended System Operating Temp.:

-34°C to 82°C [-30°F to 180°F]

Recommended Filtration:

per ISO Cleanliness Code, level 20/18/13

W Series (162-)

Performance Data

Motors run with high efficiency in all areas designated with a number for torque and speed. For best motor life select a motor to run with a torque and speed range shown in the light shaded area.

Performance data is typical at 120 SUS. Actual data may vary slightly from motor to motor in production.

Continuous

Intermittent

80 cm³/r [4.9 in³/r]

Δ Pressure bar [PSI]

Continuous

Flow l/min [GPM]	[400] 28	[600] 41	[800] 55	[1000] 69	[1200] 83	[1400] 97	[1600] 110	[1800] 124	[2000] 138	[2200] 152	[2400] 165	[2600] 179
[2] 7,6	[204] 23 93	[337] 38 89	[474] 54 88	[612] 69 84	[748] 85 83	[883] 100 79	[1019] 115 73	[1149] 130 69	[1281] 145 69	[1412] 160 61	[1540] 174 56	[1610] 182 39
[4] 15,1	[223] 25 178	[357] 40 172	[489] 55 170	[627] 71 168	[769] 87 165	[902] 102 159	[1035] 117 157	[1169] 132 154	[1295] 146 146	[1424] 161 142	[1555] 176 131	[1676] 189 117
[6] 22,7	[255] 29 267	[342] 39 265	[477] 54 262	[612] 69 258	[749] 85 257	[879] 99 252	[1014] 115 248	[1154] 130 241	[1286] 145 235	[1408] 159 229	[1533] 173 219	[1648] 186 206

126 cm³/r [7.7 in³/r]

Δ Pressure bar [PSI]

Continuous

Flow l/min [GPM]	[400] 28	[600] 41	[800] 55	[1000] 69	[1200] 83	[1400] 97	[1600] 110	[1800] 124	[2000] 138	[2200] 152	[2400] 165	[2600] 179
[2] 7,6	[390] 44 58	[605] 68 56	[817] 92 55	[1032] 117 51	[1248] 141 49	[1448] 164 45	[1656] 187 43	[1871] 211 41	[2069] 234 33	[2243] 253 32	[2414] 273 26	[2513] 284 17
[4] 15,1	[382] 43 113	[605] 68 106	[817] 92 106	[1036] 117 104	[1252] 141 93	[1463] 165 97	[1694] 191 94	[1908] 216 88	[2113] 239 82	[2306] 261 79	[2470] 279 74	[2640] 298 60
[6] 22,7	[367] 41 172	[587] 66 167	[802] 91 164	[1017] 115 161	[1236] 140 156	[1444] 163 152	[1668] 188 147	[1882] 213 141	[2091] 236 134	[2284] 258 130	[2459] 278 120	[2637] 298 103
[8] 30,3	[346] 39 228	[561] 63 225	[769] 87 220	[981] 111 216	[1203] 136 213	[1419] 160 208	[1634] 185 201	[1849] 209 195	[2039] 230 188	[2217] 250 174	[2432] 275 163	[2633] 297 149

154 cm³/r [9.4 in³/r]

Δ Pressure bar [PSI]

Continuous

Flow l/min [GPM]	[400] 28	[600] 41	[800] 55	[1000] 69	[1200] 83	[1400] 97	[1600] 110	[1800] 124	[2000] 138	[2200] 152	[2400] 165	[2600] 179
[2] 7,6	[450] 51 47	[723] 82 47	[989] 112 46	[1249] 141 44	[1512] 171 40	[1769] 200 39	[2021] 228 36	[2269] 256 33	[2502] 283 30	[2714] 307 26	[2904] 328 19	[3019] 341 10
[4] 15,1	[470] 53 94	[737] 83 93	[1009] 114 90	[1276] 144 89	[1540] 174 87	[1802] 204 84	[2064] 233 81	[2323] 262 78	[2570] 290 73	[2813] 318 67	[3019] 341 65	[3242] 366 52
[6] 22,7	[435] 49 143	[715] 81 140	[984] 111 138	[1252] 141 137	[1513] 171 134	[1787] 202 131	[2020] 228 128	[2274] 257 124	[2521] 285 117	[2812] 318 112	[3042] 344 103	[3301] 373 91
[8] 30,3	[407] 46 190	[677] 76 188	[945] 107 186	[1214] 137 184	[1477] 167 182	[1740] 197 179	[2005] 227 176	[2260] 255 171	[2503] 283 166	[2735] 309 158	[2964] 335 148	[3206] 362 137
[9] 34	[380] 43 214	[648] 73 212	[914] 103 210	[1183] 134 207	[1452] 164 206	[1714] 194 202	[1981] 224 200	[2243] 253 196	[2499] 282 191	[2733] 309 182	[2964] 335 173	[3195] 361 162

195 cm³/r [11.9 in³/r]

Δ Pressure bar [PSI]

Continuous

Flow l/min [GPM]	[400] 28	[600] 41	[800] 55	[1000] 69	[1200] 83	[1400] 97	[1600] 110	[1800] 124	[2000] 138	[2200] 152	[2400] 165	[2600] 179
[2] 7,6	[478] 54 38	[827] 93 38	[1171] 132 37	[1511] 171 36	[1839] 208 35	[2153] 243 34	[2452] 277 34	[2756] 311 30	[3027] 342 29	[3275] 370 26	[3513] 397 22	[3673] 415 16
[4] 15,1	[515] 58 75	[872] 99 73	[1220] 138 73	[1558] 176 71	[1886] 213 70	[2206] 249 69	[2518] 284 66	[2816] 318 64	[3107] 351 62	[3382] 382 56	[3647] 412 52	[3882] 439 44
[6] 22,7	[524] 59 114	[878] 99 111	[1214] 137 111	[1551] 175 110	[1875] 212 108	[2199] 248 106	[2518] 284 105	[2824] 319 103	[3113] 352 99	[3389] 383 95	[3666] 414 91	
[8] 30,3	[518] 59 151	[856] 97 150	[1187] 134 150	[1524] 172 149	[1861] 210 147	[2187] 247 145	[2499] 282 144	[2782] 314 143	[3064] 346 141	[3334] 377 136		
[10] 38	[462] 52 190	[797] 90 188	[1133] 128 187	[1468] 166 186	[1799] 203 184	[2118] 239 184	[2442] 276 182	[2739] 309 179	[3023] 342 176	[3281] 371 160		

[3673] 415 16 } Torque [lb-in] Nm Speed RPM

B-5

W Series (162-)

Performance Data

Motors run with high efficiency in all areas designated with a number for torque and speed. For best motor life select a motor to run with a torque and speed range shown in the light shaded area.

Performance data is typical at 120 SUS. Actual data may vary slightly from motor to motor in production.

Continuous

Intermittent

251 cm³/r [15.3 in³/r]

Δ Pressure bar [PSI]

Continuous

Flow l/min [GPM]	[400] 28	[600] 41	[800] 55	[1000] 69	[1200] 83	[1400] 97	[1600] 110	[1800] 124	[2000] 140	[2200] 152	[2400] 165
[2] 7,6	[759] 86 30	[1194] 135 29	[1683] 190 29	[2122] 240 28	[2535] 286 27	[2928] 331 27	[3319] 375 25	[3634] 411 22	[3946] 446 17	[4242] 479 15	[4553] 514 14
[4] 15,1	[806] 91 59	[1257] 142 58	[1691] 191 58	[2130] 241 56	[2563] 290 55	[2988] 338 55	[3381] 382 52	[3799] 429 48	[4147] 469 47	[4515] 510 41	[4849] 548 40
[6] 22,7	[780] 88 90	[1219] 138 88	[1646] 186 87	[2084] 235 86	[2515] 284 85	[2933] 331 83	[3336] 377 83	[3716] 420 79			
[8] 30,3	[720] 81 120	[1148] 130 118	[1590] 180 117	[2029] 229 117	[2449] 277 114	[2861] 323 112	[3236] 366 111	[3627] 410 108			
[10] 37,9	[645] 73 148	[1080] 122 147	[1513] 171 147	[1947] 220 145	[2371] 268 145	[2779] 314 143	[3151] 356 141	[3515] 397 137			
[12] 45,4	[557] 63 178	[992] 112 177	[1428] 161 176	[1864] 211 174	[2292] 259 174	[2697] 305 172	[3087] 349 169				
[14] 53,0	[460] 52 208	[888] 100 206	[1330] 150 206	[1761] 199 203	[2191] 248 202	[2615] 295 200	[3035] 343 197				

303 cm³/r [18.5 in³/r]

Δ Pressure bar [PSI]

Continuous

Flow l/min [GPM]	[400] 28	[600] 41	[800] 55	[1000] 69	[1200] 83	[1400] 97	[1600] 110	[1800] 124	[2000] 140
[2] 7,6	[920] 104 24	[1454] 164 24	[1974] 223 24	[2480] 280 23	[2969] 335 22	[3429] 387 22	[3859] 436 20	[4230] 478 18	[4583] 518 16
[4] 15,1	[960] 108 49	[1487] 168 49	[2007] 227 47	[2513] 284 47	[3006] 340 46	[3457] 391 45	[3905] 441 44	[4338] 490 41	[4769] 539 39
[6] 22,7	[911] 103 73	[1445] 163 73	[1961] 222 72	[2473] 279 72	[2952] 334 71	[3411] 385 69	[3842] 434 68	[4276] 483 66	
[8] 30,3	[843] 95 99	[1375] 155 98	[1888] 213 97	[2393] 270 96	[2886] 326 95	[3350] 379 94	[3763] 425 93		
[10] 37,9	[752] 85 123	[1274] 144 122	[1789] 202 122	[2303] 260 120	[2792] 316 119	[3274] 370 119	[3650] 412 118		
[12] 45	[652] 74 148	[1170] 132 147	[1691] 191 146	[2199] 248 145	[2691] 304 145	[3123] 353 144			
[14] 53	[526] 59 172	[1039] 117 172	[1560] 176 171	[2064] 233 170	[2548] 288 169	[2999] 339 168			
[16.5] 62	[353] 40 203	[864] 98 203	[1367] 154 201	[1876] 212 200	[2369] 268 200				

[4583] 518 16 } Torque [lb-in] Nm Speed RPM

374 cm³/r [22.8 in³/r]

Δ Pressure bar [PSI]

Continuous

Flow l/min [GPM]	[400] 28	[600] 41	[800] 55	[1000] 69	[1200] 83	[1400] 97	[1600] 110	[1800] 124
[2] 7,6	[1086] 123 20	[1753] 198 19	[2365] 267 17	[2960] 334 16	[3533] 399 14	[4025] 455 12	[4484] 507 12	[4970] 562 11
[4] 15,1	[1152] 130 39	[1797] 203 39	[2431] 275 38	[3048] 344 36	[3624] 409 34	[4129] 467 33	[4599] 520 31	
[6] 22,7	[1099] 124 60	[1749] 198 58	[2377] 269 57	[2996] 339 56	[3557] 402 54	[4077] 461 53		
[8] 30,3	[1018] 115 80	[1662] 188 79	[2290] 259 78	[2894] 327 76	[3440] 389 75	[3952] 447 74		
[10] 37,9	[940] 106 100	[1582] 179 99	[2210] 250 97	[2812] 318 96	[3346] 378 95	[3816] 431 95		
[12] 45,4	[809] 91 120	[1454] 164 119	[2077] 235 117	[2677] 302 116	[3216] 363 115			
[14] 53,0	[648] 73 141	[1284] 145 139	[1907] 215 138	[2506] 283 137	[3033] 343 137			
[16] 60,6	[485] 55 160	[1107] 125 159	[1722] 195 157	[2315] 262 157	[2838] 321 157			
[18] 68,1	[307] 35 180	[930] 105 179	[1543] 174 178	[2133] 241 178				
[20] 75,7	[111] 13 201	[730] 82 199	[1342] 152 198	[1939] 219 197				

W Series (162-)

Dimensions

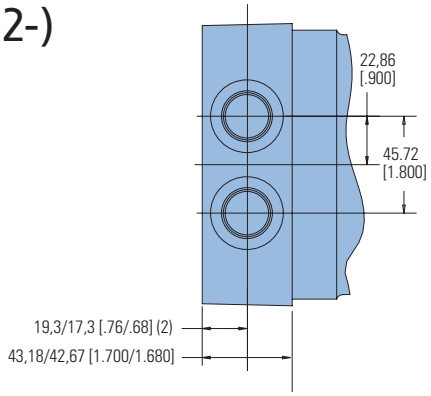

Ports

7/8-14 SAE O-Ring Ports

G1/2 BSP Straight Thread Port

Manifold (15/16-18 Mounting Threads)

Standard Rotation Viewed from Shaft End

Port A Pressurized — CW

Port B Pressurized — CCW

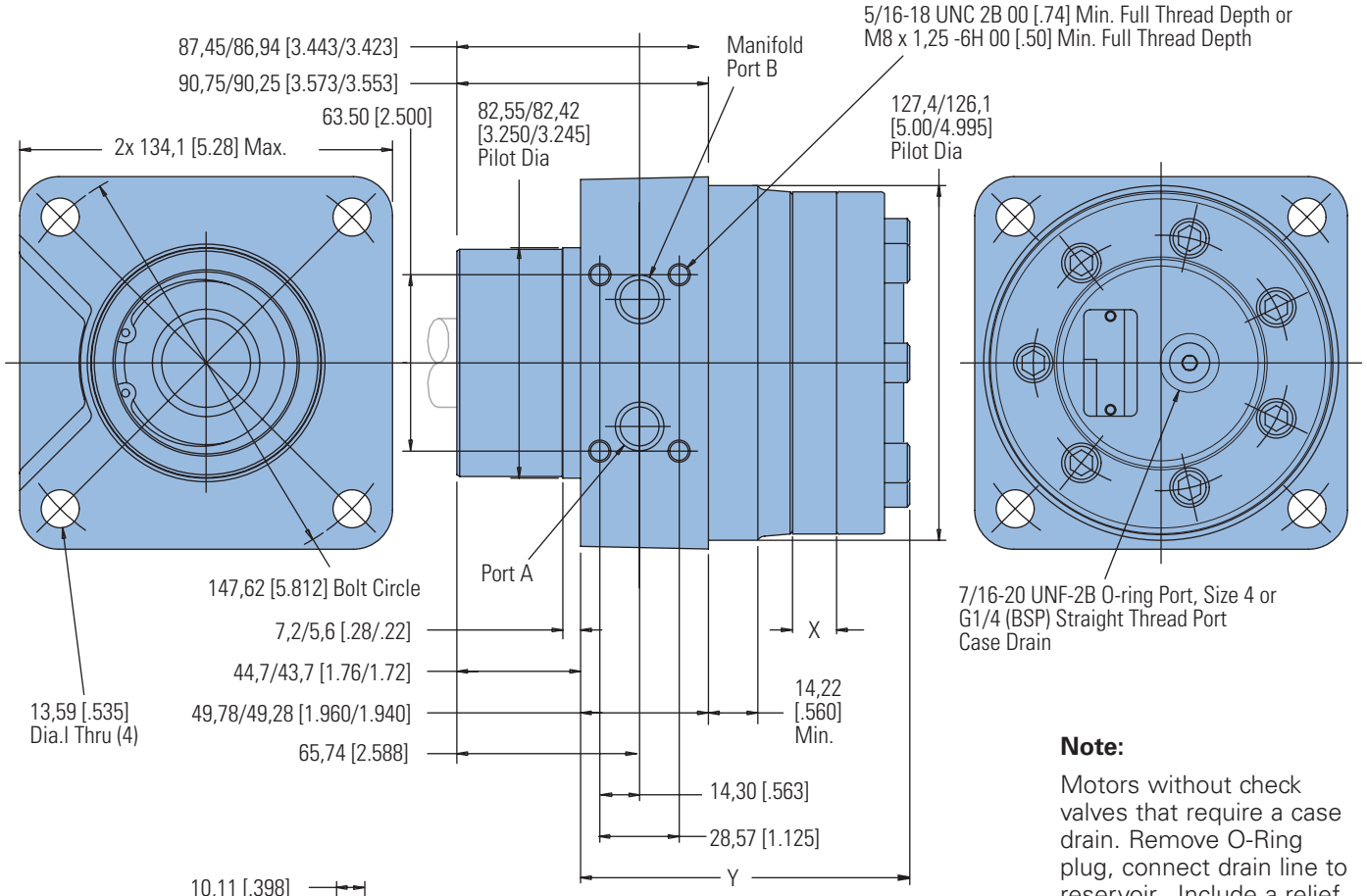

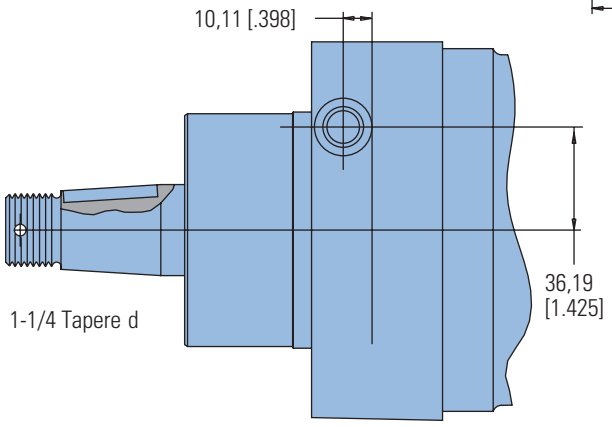

Note:

Motors without check valves that require a case drain. Remove O-Ring plug, connect drain line to reservoir. Include a relief valve (in the drain line) set to maintain 3,4 bar [50 PSI] motor case pressure.

W SERIES DIMENSIONS

Displacement cm^3/r [in^3/r]	X mm [inch]	Y mm [inch]
80 [4.9]	9,1 [.36]	116,6 [4.59]
126 [7.7]	11,9 [.47]	119,6 [4.71]
154 [9.4]	14,7 [.58]	122,2 [4.81]
195 [11.9]	18,5 [.73]	126,2 [4.97]
251 [15.3]	23,9 [.94]	131,6 [5.18]
303 [18.5]	29,0 [1.14]	136,4 [5.37]
374 [22.8]	35,6 [1.40]	143,3 [5.64]

W Series (162-)

Dimensions Shafts

Recommended Torque:

(373 Nm [275 lb-ft] Dry)
(305 Nm [225 lb-ft] Lub) Plus Torque required to align the slotted nut with the Shaft Crosshole.

1 1/4 Tapered

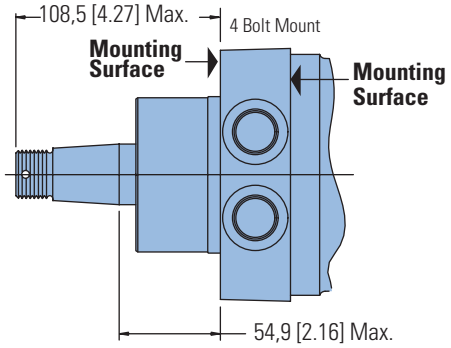

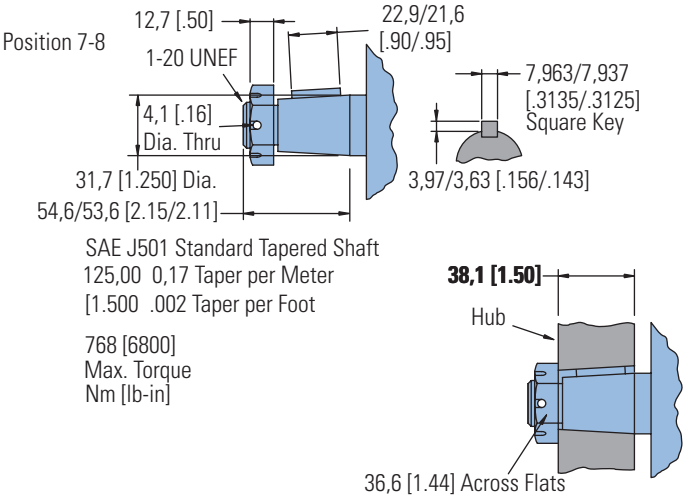

1 1/4 Inch Straight

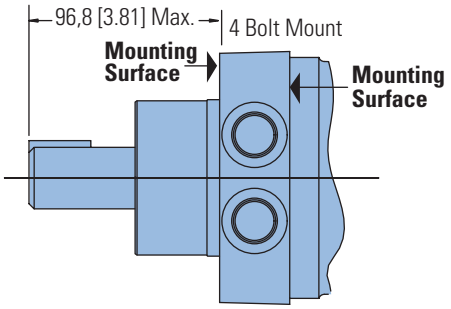

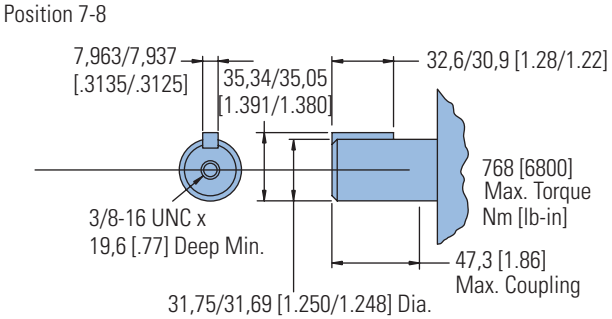

32 mm Straight

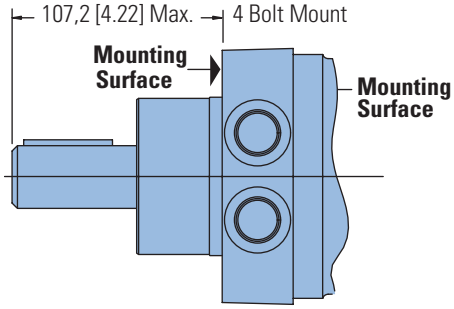

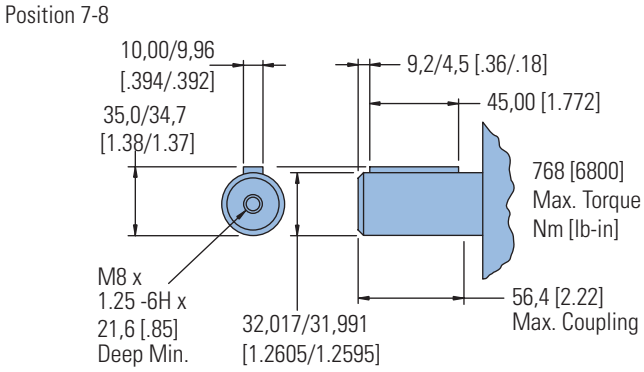

1 1/4 14 Tooth Splined

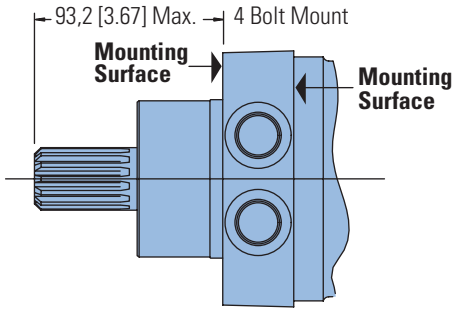

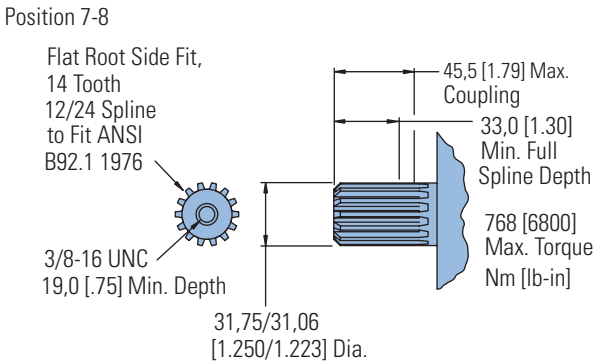

W Series (162-)

Shaft Side Load Capacity

1) Case pressure needs to be added to the outward axial thrust load and subtracted from inward axial thrustload – Case Pressure bar x 87, 1 [PSI x 1.35]
2) Life values in Chart A can be adjusted for speeds up to 200 rpm.

$$\frac{\text{Life value x 100 rpm}}{\text{application rpm}}$$

3) Shaded areas are intermittent loading.
4) To convert application radial load at any load location to sideload at the center of keyway multiply load by the application factor from Chart B.

Example:

Side Load: 4849 N @ 120 mm [1090 lbf @ 4.75 inch] from flange.
Average Thrust Load: 890 N [200 lbf] inward (toward motor).
Case Pressure: 66 bar [960 PSI].
Average Speed: 150 rpm.

Expected Life Calculation: Adjust side load value (due to load variation): from Chart B look at 120mm [4.75 inch] read at angled curve for load adjustment factor of 1.38. Adjusted load is: (4849 N [1090 lbf]) x (1.38) = 6690 N [1504 lbf]
Thrust Load Value (due to case pressure):
(960 PSI) x (1.35) = [1296 lbf]
(66 bar) x (87,1) = 5750 N
Average thrust load found to be 890 N [200 lbf] inwards so subtract from thrust load due from case pressure:
5750 N - 890 N = 4860 N or
[1296 lbf] - 200 lbf = [1096 lbf]

Read Life Expectancy from Chart A: Value from chart reading across top to 6672 [1500] (6090 N [1504 lbf]) and down left side to 4895 [1100] (4875 N [1096 lbf])
Life = 1800 Hours
Speed Adjustment for over 100 rpm:

$$\frac{\text{(1800 hrs) x (100 rpm)}}{\text{150 rpm}} = \text{1200 Hours}$$

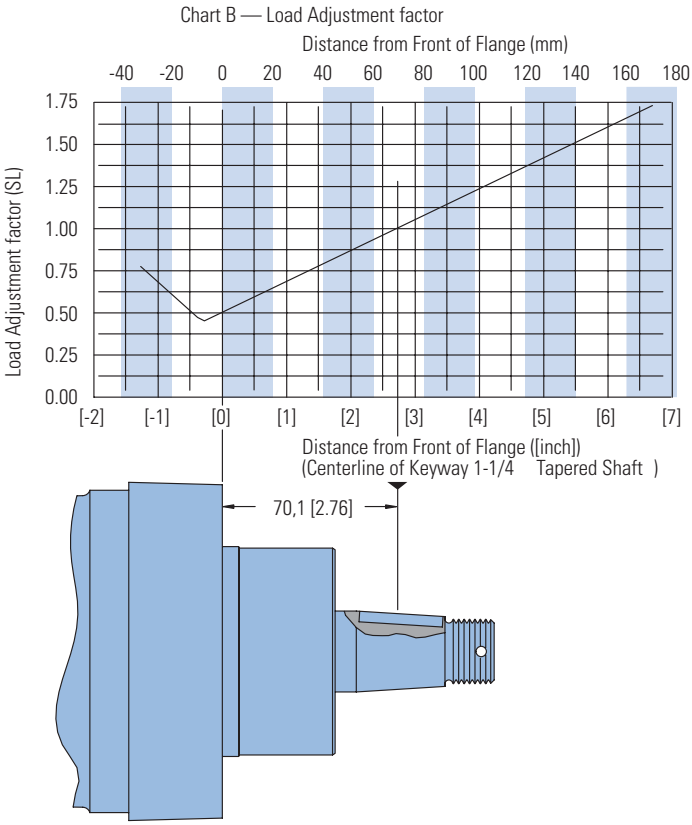

CHART A — EXPECTED B10 LIFE (HOURS) OF BEARING UNDER VARIOUS LOADS

Axial Thrust		Radial Load at Centerline of keyway at 100 RPM									
N	**lbf]**	**1110 [250]**	**2225 [500]**	**3335 [750]**	**4450 [1000]**	**4560 [1250]**	**6670 [1500]**	**7785 [1750]**	**8895 [2000]**	**11120 N [2500lbf]**	**13345 N [3000lbf)**
445	[100]	410 600	66 000	19 600	8 300	4 200	2 400	1 500	1 000	530	310
1335	[300]	92 700	40 900	19 600	8 300	4 200	2 400	1 500	1 000	530	310
2225	[500]	39 400	20 900	12 400	7 900	4 200	2 400	1 500	1 000	530	310
3115	[700]	21 400	12 600	8 100	5 500	3 900	2 400	1 500	1 000	530	
4005	[900]	13 300	8 400	5 700	4 000	2 900	2 200	1 500	1 000	530	
4895	[1100]	9 000	6 000	4 200	3 100	2 300	1 800	1 400	1 000		
5785	[1300]	6 500	4 500	3 200	2 400	1 900	1 500	1 200	900		
6670	[1500]	4 800	3 500	2 600	2 000	1 500	1 200	1 000			
7560	[1700]	3 700	2 800	2 100	1 600	1 300					
8450	[1900]	3 000	2 200								
8895	[2000] Max. Thrust										

W Series (162-)

Model Code

The following 16-digit coding system has been developed to identify all of the configuration options for the W Series motor. Use this model code to specify a motor with the desired features. All 16-digits of the code must be present when ordering. You may want to photocopy the matrix below to ensure that each number is entered in the correct box.

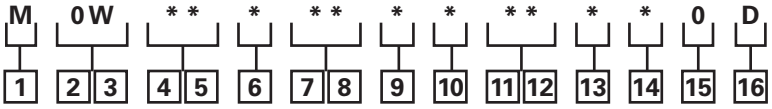

1 Product

M – Motor

2, 3 Series

0W – W Series

4, 5 Displacement cm³/r [in³/r]

05 – 30 [4.9]

08 – 126 [7.7]

09 – 154 [9.4]

12 – 195 [11.9]

15 – 251 [15.3]

19 – 303 [18.5]

23 – 374 [22.8]

6 Mounting Type

B – 4 Bolt (Wheel) 82,6 [3.25] Pilot Dia. and 13,59 [.535] Dia. Mounting Holes 147,6 [5.81] Dia., B.C., 127,0 127,0 [5.00] rear pilot

7, 8 Output Shaft

02 –1 1/4 inch Dia. Flat Root Side Fit, 14 Tooth, 12/24 DP 30° Involute Spline with 3/8-16 UNC-2B Thread in End, 33,0 [1.30] Min. Full Spline

03 – 1 1/4 inch Dia. .125:1 Tapered Shaft Per SAE J501 with 1– 20 UNEF -2A Threaded Shaft End and Slotted Hex Nut, 7,938 [.3125] Square x 22,22 [.875] Straight Key

04 – 32mm Dia. Straight Shaft with M8 x 1, 25-6H Thread in End, 9,982 [.3930] Wide x 7,995 [.3132] High x 45,00 [1.772] Long Key

06 – 1 1/4 inch Dia. Straight Shaft with 3/8 – 16 UNC 2B Thread in End, 7.938 [.3125] Square x 34,92 [1.375] Straight Key

9 Ports

A – 7/8 -14 UNF - 2B SAE O-Ring Port

B – G 1/2 (BSP) Straight Thread Port

10 Case Flow Options

A – 7/16 - 20 UNF - 2B SAE O-Ring Port

B – G 1/4 (BSP) Straight Thread Port

C – Internal Check Valve

11, 12 Special Features (Hardware)

00 – None

01 – Viton Seals

13 Special Features (Assembly)

0 – None

1 – Reverse Rotation

14 Paint/Special Packaging

0 – No Paint, Individual Box

A – Low Gloss Black Primer, Bulk Box Option

15 Eaton Assigned Code when Applicable

0 – Assigned Code

16 Eaton Assigned Design Code

D – Assigned Design Code

W Series (162-) with Parking Brake

Dimensions

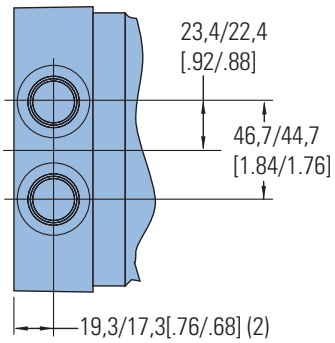

Ports

7/8 -14 UNF 2B SAE O-Ring Ports (2) or
G 1/2 (BSP) Straight Thread

Standard Rotation Viewed from Shaft End

Port A Pressurized — CW
Port B Pressurized — CCW

Port Dimensions

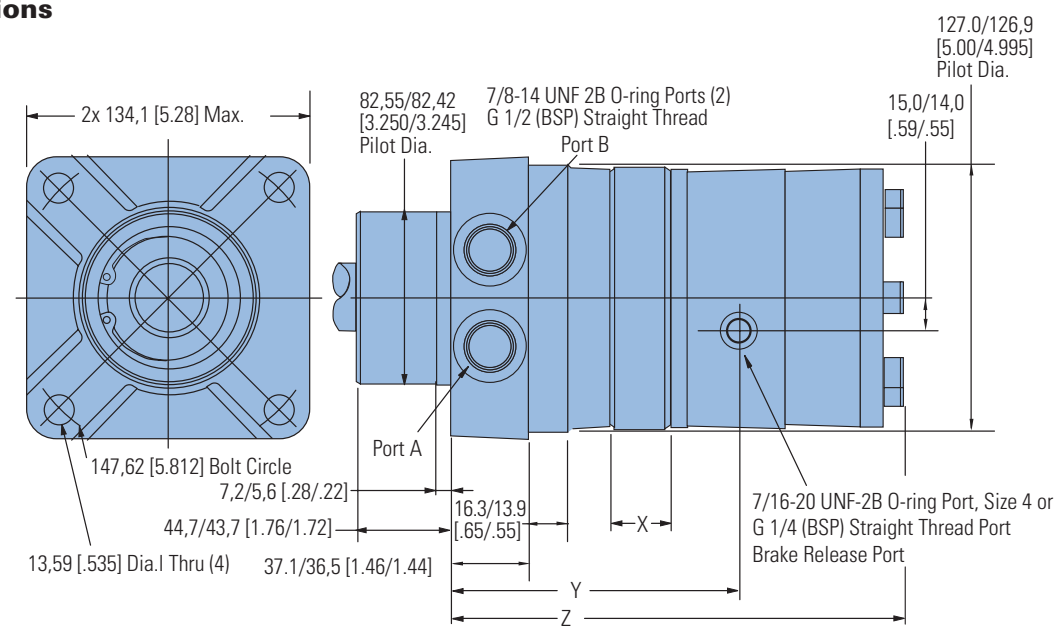

Mounting Dimensions

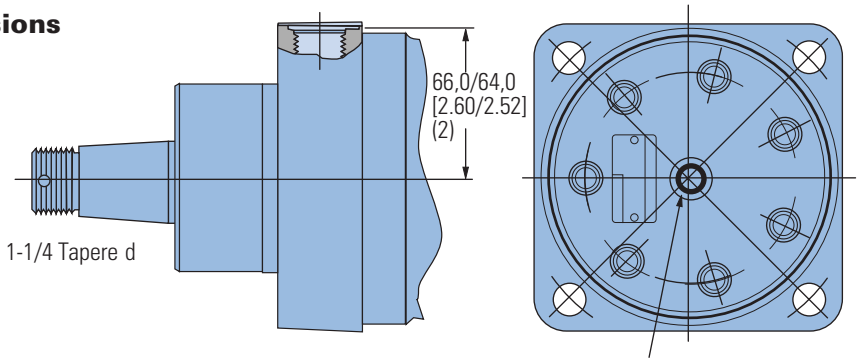

PORTING AND MOUNTING DIMENSIONS

Displacement cm³/r [in³/r]	X mm [inch]	Y mm [inch]	Z mm [inch]
80 [4.9]	9,1 [0.36]	119,9 [4.72]	198,4 [7.81]
126 [7.7]	11,9 [0.47]	122,9 [4.84]	201,2 [7.92]
154 [9.4]	14.7 [0.58]	125,5 [4.94]	204,0 [8.03]
195 [11.9]18,5 [0.73]	129,6 [5.10]	207,8 [8.18]	
251 [15.3]23,9 [0.94]	134,9 [5.31]	213,4 [8.40]	
303 [18.5]29,0 [1.14]	139,7 [5.50]	217,7 [8.59]	
374 [22.8]35,6 [1.40]	146,6 [5.77]	226,8 [8.85]	

SPECIFICATIONS

Brake Release Pressure	205 bar [3000 PSI] Max.; 15 bar [250 PSI] Min.

W Series,
W Series (162-) with Parking Brake

Product Numbers

Use digit prefix — 162 plus four digit number from charts for complete product number — Example 162-1153.

Orders will not be accepted without three digit prefix.

Standard

SHAFT	DISPL. cm^3/r [in^3/r] / PRODUCT NUMBER						
	80 [4.9]	126 [7.7]	154 [9.4]	195 [11.9]	251 [15.3]	303 [18.5]	374 [22.8]
Standard	162-1016	-1017	-1018	-1019	-1020	-1021	-1022
w/Case Drain	162-1023	-1024	-1025	-1009	-1008	-1026	-1027



W Series with Parking Brake

SHAFT	DISPL. cm^3/r [in^3/r] / PRODUCT NUMBER						
	80 [4.9]	126 [7.7]	154 [9.4]	195 [11.9]	251 [15.3]	303 [18.5]	374 [22.8]
Standard	162-1143	-1144	-1145	-1146	-1183	-1148	-1149

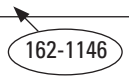

Note:

All above motors have 1-1/4 inch tapered output shaft, 7/8 inch O-Ring Ports, internal check valves.

For W Series Motors with a configuration not shown in the chart above: Use the model code number system to specify the product in detail. (see page B-5-8 and use the model code supplement shown on page B-5-11 for spring-applied hydraulic-release parking brake).

W Series with Parking Brake (162-)

Model Code

The following 16-digit coding system has been developed to identify all of the configuration options for the W motor. Use this model code to specify a motor with the desired features. All 16-digits of the code must be present when ordering. You may want to photocopy the matrix below to ensure that each number is entered in the correct box.

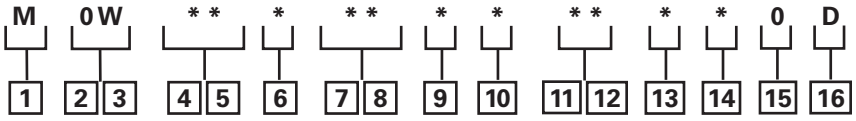

1 Product

M – Motor

2, 3 Series

0W – W Series with Parking Brake

4, 5 Displacement cm³/r [in³/r]

05 – 30 [4.9]

08 – 126 [7.7]

09 – 154 [9.4]

12 – 195 [11.9]

15 – 251 [15.3]

19 – 303 [18.5]

23 – 374 [22.8]

6 Mounting Type

B – 4 Bolt (Wheel) 82,6 [3.25] Pilot Dia. and 13,59 [.535] Dia. Mounting Holes 147,6 [5.81] Dia., B.C., 127,0 127,0 [5.00] rear pilot

7, 8 Output Shaft

02 –1 1/4 inch Dia. Flat Root Side Fit, 14 Tooth, 12/24 DP 30° Involute Spline with 3/8-16 UNC-2B Thread in End, 33,0 [1.30] Min. Full Spline

03 – 1 1/4 inch Dia. .125:1 Tapered Shaft Per SAE J501 with 1– 20 UNEF -2A Threaded Shaft End and Slotted Hex Nut, 7,938 [.3125] Square x 22,22 [.875] Straight Key

04 – 32mm Dia. Straight Shaft with M8 x 1, 25-6H Thread in End, 9,982 [.3930] Wide x 7,995 [.3132] High x 45,00 [1.772] Long Key

06 – 1 1/4 inch Dia. Straight Shaft with 3/8 – 16 UNC 2B Thread in End, 7.938 [.3125] Square x 34,92 [1.375] Straight Key

9 Ports

A – 7/8 -14 UNF - 2B SAE O-Ring Port

B – G 1/2 (BSP) Straight Thread Port

10 Case Flow Options

A – 7/16 - 20 UNF - 2B SAE O-Ring Port

B – G 1/4 (BSP) Straight Thread Port

C – Internal Check Valve

11, 12 Special Features (Hardware)

00 – None

01 – Viton Seals

11 – Spring-applied hydraulic-release brake

13 Special Features (Assembly)

0 – None

1 – Reverse Rotation

14 Paint/Special Packaging

0 – No Paint, Individual Box

A – Low Gloss Black Primer - Individual Box

15 Eaton Assigned Code when Applicable

0 – Assigned Code

16 Eaton Assigned Design Code

D – Assigned Design Code



State of the art motors benefiting from 55 years of experience and innovating constantly to fit your demands.

C-1
C-2
C-3
C-4
C-5
C-6

Powering Business Worldwide

Disc Valve Hydraulic Motors

Highlights

Product Description

In the late 1950's the original low speed, high torque hydraulic motor was developed from a pump Geroter element consisting of an internal gear ring and a mating gear or star. While attaching the internal gear ring to the housing as a non moving part, oil was ported to pressurize and turn the internal star in an orbit around a center point. This slow turning star coupled with a splined drive to the output shaft became the Char-Lynn Orbit® motor.

A few years after this original Char-Lynn Orbit motor was introduced another original motor concept went into production. This motor had rolls incorporated into the internal gear ring, this element was identified by the name Geroler and is a registered trade name of Eaton Hydraulics. From these early years the Geroler motor has seen many design changes to make these Geroler motors the best the industry has to offer. Examine the simplicity of these Geroler disc valve motors shown below. Also examine all the following pages for high value Char-Lynn disc valve motors from Eaton Hydraulics.

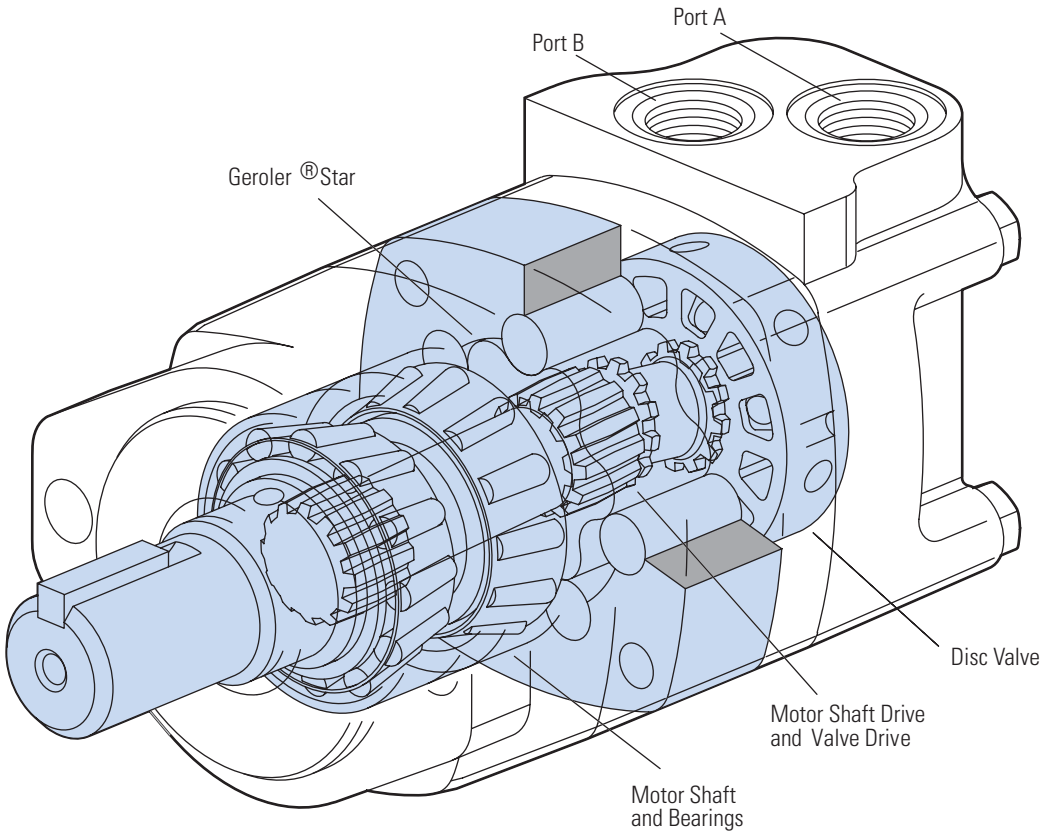

Features, Benefits, and Applications

Features

Char-Lynn Hydraulic motors provide design flexibility. All disc valve motors are available with various configurations consisting of:

- Displacement (Geroler size)
- Output Shaft
- No Shaft and Bearing Assembly (Bearingless Motor)
- Port Configuration
- Mounting Flange
- Other Special Features

Benefits

- Lowest pressure drop motor in the industry
- Widest range of options
- The most experienced manufacturer of LSHT motors

Applications

- Swing motor
- Brush Cutters & mowers
- Harvesting equipment
- Directional boring
- Turf equipment
- Skid Steer loaders
- Fairway mowers
- Harvesters
- Mowing
- Snow removal
- Sprayers
- Trencher
- Wood products
- Grinders and mixers
- Forestry equipment
- Irrigation reels

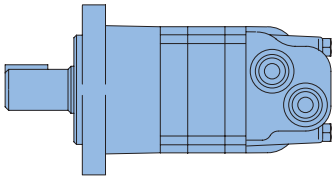

Standard Motor

The standard motor mounting flange is located as close to the output shaft as possible. This type of mounting supports the motor close to the shaft load. This mounting flange is also compatible with many standard gear boxes.

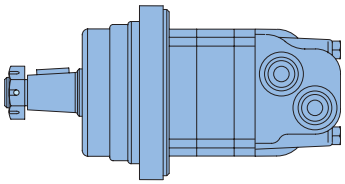

Wheel Motor

The wheel motor mounting flange is located near the center of the motor which permits part or all of the motor to be located inside the wheel or roller hub. In traction drive applications, loads can be positioned over the motor bearings for best bearing life. This wheel motor mounting flange provides design flexibility in many applications.

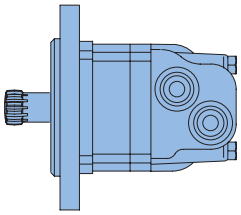

Bearingless Motor

The bearingless motor has the same drive components as the standard and wheel motors (with the exception that the motor is assembled without the output shaft, bearings and bearing housing). The bearingless motor is especially suited for applications such as gear boxes, winch drives, reel and roll drives. Bearingless motor applications must be designed with a bearing supported internal spline to mate with the bearing-less motor drive. Product designs using these hydraulic motors provide considerable cost savings.

Table of Contents

Highlights	C-ii
Features, Benefits and Applications	C-iii
Table of Contents	C-iv

2000 Series

Highlights	C-1-1
Specifications	C-1-2
Performance Data	C-1-3
Dimensions	C-1-9
Installation Information	C-1-15
Shaft Side Load Capacity	C-1-19
Case Pressure and Case Porting	C-1-20
Product Numbers	C-1-24
Model Code	C-1-25

2000 Series Two-Speed

Description	C-1-26
Performance Data	C-1-26
Typical Hydraulic Circuit	C-1-27
Specifications	C-1-28
Dimensions	C-1-29
Product Numbers	C-1-31

4000 Compact Series

Highlights	C-2-1
Specifications	C-2-2
Performance Data	C-2-3
Dimensions	C-2-9
Installation Information	C-2-12
Shaft Side Load Capacity	C-2-17
Case Pressure and Case Port	C-2-18
Model Code	C-2-22

Delta Series

Highlights	C-3-1
Specifications	C-3-2
Performance Data	C-3-3
Dimensions	C-3-9
Installation Inforamtion	C-3-10
Model Code	C-3-11

4000 Series

Highlights	C-4-1
Specifications	C-4-2
Performance Data	C-4-3
Dimensions	C-4-8
Installation Information	C-4-11
Shaft Side Load Capacity	C-4-13
Case Pressure and Case Port	C-4-14
Product Numbers	C-4-16
Model Code	C-4-17

6000 Series

Highlights	C-5-1
Specifications	C-5-2
Performance Data	C-5-3
Dimensions	C-5-8
Installation Information	C-5-12
Shaft Side Load Capacity	C-5-14
Case Pressure and Case Port	C-5-15
Dimensions Ports	C-5-16
Product Numbers	C-5-17
Model Code	C-5-18

10,000 Series

Highlights	C-6-1
Specifications	C-6-2
Performance Data	C-6-3
Dimensions	C-6-5
Installation Information	C-6-8
Side Shaft Load Capacity	C-6-10
Product Numbers	C-6-12
Model Code	C-6-13

2000 Series

Highlights

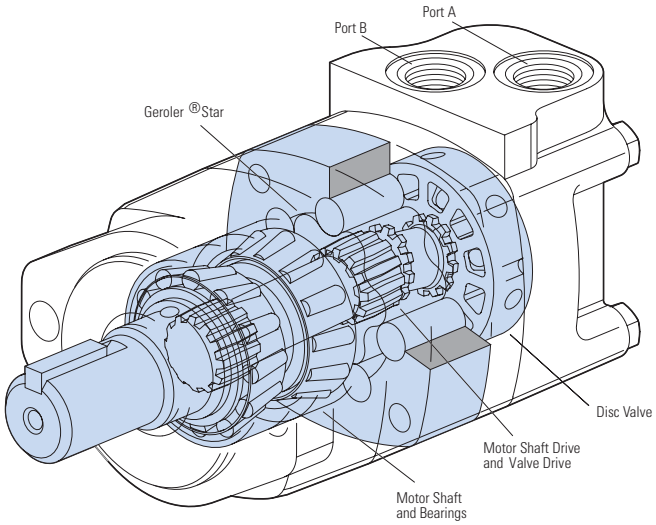

Features

- Three zone design for longer life and true bi-directionality.
- Bearings that meet the highest standards of the industry
- Options to optimize performance in every application
- Integrated cross-over relief valve option

Benefits

- Easy to design in a system
- Proven reliablity and performance in tough applications
- Compact design that maximizes power density

Applications

- Skid Steer Attachments
- Swing Motor
- Brush Cutters & Mowers
- Harvesting Equipment
- Directional Boring any place pressure relief protection is optimal for system or motor performance and life
- Turf equipment

C-1

Description

The popular 2000 Series provides torque up to 7500 lb-in. This proven design is reliable and durable. Eaton has added options that make the motor more flexible to use in a wide variety of applications. The expanded displacement range using patented "Drive in Drive" technology is the latest innovation in the 2000 series of motors

2000 Series

Geroler Element	13 Displacements
Flow l/min [GPM]	75 [20] Continuous**
	115 [30] Intermittent*
Speed RPM	1215 Cont.**
	1215 Inter.*
Pressure bar [PSI]	205 [3000] Cont.**
	310 [4500] Inter.*
Torque Nm [lb-in]	845 [7470] Cont.**
	930 [8225] Inter.*

** Continuous— (Cont.) Continuous rating, motor may be run continuously at these ratings.
* Intermittent— (Inter.) Intermittent operation, 10% of every minute.


Harvestor


Paving Equipment


Conveyors


Boom Lifts

2000 Series

Specifications

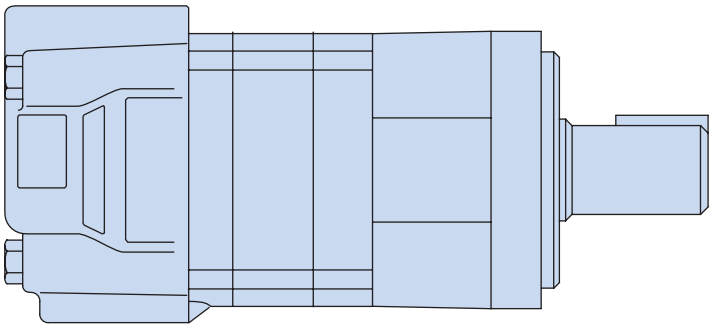

SPECIFICATION DATA — 2000 SERIES MOTORS

Displ. cm^3/r [in^3/r]		34 [2.1]	41 [2.5]	66 [4.0]	80 [4.9]	90 [5.5]	100 [6.2]	130 [8.0]	160 [9.6]	195 [11.9]	245 [14.9]	305 [18.7]	395 [24.0]	490 [29.8]
Max Speed	Continuous	1215	1104	1075	908	836	742	576	477	385	308	246	191	153
(RPM) @ Flow	Intermittent	1215	1216	1214	908	1042	924	720	713	577	462	365	287	230
Flow	Continuous	42 [11]	45 [12]	72 [19]	75 [20]	75 [20]	75 [20]	75 [20]	75 [20]	75 [20]	75 [20]	75 [20]	75 [20]	75 [20]
l/min [GPM]	Intermittent	42 [11]	53 [14]	87 [23]	75 [20]	95 [25]	95 [25]	95 [25]	115 [30]	115 [30]	115 [30]	115 [30]	115 [30]	115 [30]
Torque*	Continuous	98 [864]	112 [988]	186 [1643]	235 [2065]	265 [2326]	295 [2630]	385 [3420]	455 [4040]	540 [4780]	660 [5850]	765 [6750]	775 [6840]	845 [7470]
Nm [lb-in]	Intermittent	141 [1250]	169 [1497]	276 [2446]	345 [3035]	390 [3458]	445 [3950]	560 [4970]	570 [5040]	665 [5890]	820 [7250]	885 [7820]	925 [8170]	930 [8225]
Pressure	Continuous	205 [3000]	205 [3000]	205 [3000]	205 [3000]	205 [3000]	205 [3000]	205 [3000]	205 [3000]	205 [3000]	205 [3000]	205 [3000]	155 [2250]	120 [1750]
	Intermittent	310 [4500]	310 [4500]	310 [4500]	310 [4500]	310 [4500]	310 [4500]	310 [4500]	260 [3750]	260 [3750]	260 [3750]	240 [3500]	190 [2750]	140 [2000]
Δ bar [Δ PSI]	Peak	310 [4500]	310 [4500]	310 [4500]	310 [4500]	310 [4500]	310 [4500	310 [4500]	310 [4500]	310 [4500]	310 [4500]	310 [4500]	225 [3250]	170 [2500]
Weight	Standard or Wheel Mount	8.8 [19.4]	8.8 [19.4]	8.8 [19.4]	9.3 [20.5]	9.3 [20.5]	9.5 [21.0]	9.8 [21.5]	10.0 [22.0]	10.4 [23.0]	11.3 [25.0]	11.3 [25.0]	11.8 [26.0]	12.2 [27.0]
kg [lb]	Bearingless	6.8 [15.0]	6.8 [15.0]	6.8 [15.0]	7.3 [16.0]	7.3 [16.0]	7.5 [16.5]	7.7 [17.0]	7.9 [17.5]	8.4 [18.5]	9.3 [20.5]	9.3 [20.5]	9.8 [21.5]	10.2 [22.5]

Note:

To assure best motor life, run motor for approximately one hour at 30% of rated pressure before application to full load. Be sure motor is filled with fluid prior to any load applications.

Maximum Inlet Pressure:

310 bar [4500 PSI]

Do not exceed Δ pressure rating (see chart above).

Maximum Return Pressure:

310 bar [4500 PSI] with case drain line installed.

Do not exceed Δ pressure rating (see chart above).

Δ bar [Δ PSI] :

The true pressure difference between inlet port and outlet port

Continuous Rating:

Motor may be run continuously at these ratings

Intermittent Operation:

10% of every minute

Peak Operation:

1% of every minute

Recommended Fluids:

Premium quality, anti-wear type hydraulic oil with a viscosity of not less than 70 SUS at operating temperature.

Recommended System Operating Temp.:

-34°C to 82°C [-30°F to 180°F]

Recommended Filtration:

per ISO Cleanliness Code, 4406: 20/18/13

2000 Series

Performance Data

Motors run with high efficiency in all areas designated with a number for torque and speed. For best motor life select a motor to run with a torque and speed range shown in the light shaded area.

Performance data is typical at 120 SUS. Actual data may vary slightly from unit to unit in production.

Continuous

Peak

Intermittent

No Operation

34cm³/r [2.1 in³/r]
ΔPressure Bar [PSI]

Flow LPM [GPM]	[500] 34	[1000] 69	[1500] 103	[2000] 138	[2500] 172	[3000] 207	[3500] 241	[4000] 276	[4500] 310
[2] 8	[114] 13 210	[262] 30 189	[405] 46 178	[549] 62 162					
[4] 15	[110] 12 432	[256] 29 416	[404] 46 393	[552] 62 363	[704] 80 347	[828] 94 313	[962] 109 284		
[6] 23	[115] 13 651	[249] 28 636	[400] 45 613	[550] 62 580	[708] 80 546	[864] 98 518	[996] 113 467	[1099] 124 425	[1250] 141 404
[8] 30	[126] 14 856	[232] 26 856	[393] 44 830	[548] 62 795	[702] 79 759	[856] 97 712	[1003] 113 657	[1135] 128 578	[1244] 141 549
[10] 38	[114] 13 1105	[239] 27 1077	[386] 44 1049	[541] 61 1015	[697] 79 975	[850] 96 923	[995] 112 859	[1136] 128 775	[1261] 142 707
[11] 42	[99] 11 1215	[231] 26 1191	[380] 43 1160	[533] 60 254	[679] 77 1073	[834] 94 1023	[987] 112 945	[1133] 128 854	[1245] 141 819

[231] Torque [lb-in]
26 } Nm
1191 Speed RPM

41cm³/r [2.5 in³/r]
ΔPressure Bar [PSI]

Flow LPM [GPM]	[500] 34	[1000] 69	[1500] 103	[2000] 138	[2500] 172	[3000] 207	[3500] 241	[4000] 276	[4500] 310
[2] 8	[138] 16 171	[306] 35 160	[468] 53 156	[659] 74 135					
[4] 15	[129] 15 364	[296] 33 352	[466] 53 336	[552] 62 363	[807] 91 295	[966] 109 272	[1110] 125 248	[1316] 149 235	[1421] 161 217
[6] 23	[135] 15 550	[300] 34 535	[473] 53 516	[550] 62 580	[818] 92 465	[985] 111 437	[1147] 130 406	[1292] 146 352	[1495] 169 326
[8] 30	[130] 15 734	[285] 32 722	[461] 52 699	[548] 62 795	[816] 92 641	[988] 112 616	[1150] 130 568	[1320] 149 519	[1477] 167 470
[10] 38	[137] 15 921	[276] 31 909	[455] 51 884	[541] 61 1015	[802] 91 825	[979] 111 784	[1153] 130 743	[1329] 150 687	[1497] 169 635
[12] 45	[119] 13 1104	[268] 30 1093	[441] 50 1068	[1340] 150 254	[794] 90 1003	[969] 109 972	[1141] 129 902	[1321] 149 833	[1494] 169 785
[14] 53				[597] 67 1216	[787] 89 1184	[953] 108 1144	[1124] 127 1073	[1309] 148 997	[1479] 167 921

66cm³/r [4.0 in³/r]
ΔPressure Bar [PSI]

Flow LPM [GPM]	[500] 34	[1000] 69	[1500] 103	[2000] 138	[2500] 172	[3000] 207	[3500] 241	[4000] 276	[4500] 310
[2] 8	[226] 26 103	[503] 57 102	[746] 84 93	[987] 112 88					
[4] 15	[226] 26 214	[508] 57 208	[791] 89 194	[1072] 121 188	[1342] 152 181	[1609] 182 172	[1810] 204 158	[2012] 227 136	[2220] 251 134
[6] 23	[216] 24 329	[503] 57 318	[792] 89 305	[1075] 121 290	[1353] 153 284	[1629] 184 270	[1890] 214 257	[2123] 240 235	[2332] 264 228
[8] 30	[208] 23 444	[495] 56 430	[781] 88 415	[1070] 121 401	[1352] 153 387	[1633] 184 372	[1910] 216 355	[2186] 247 339	[2405] 272 320
[10] 38	[195] 22 560	[486] 55 544	[777] 88 529	[1070] 121 513	[1359] 154 497	[1643] 186 480	[1920] 217 461	[2191] 248 440	[2446] 276 419
[12] 45	[182] 21 672	[472] 53 658	[757] 86 643	[1052] 119 623	[1345] 152 606	[1627] 184 586	[1912] 216 565	[2189] 247 547	[2444] 276 528
[14] 53	[187] 21 788	[459] 52 776	[750] 85 758	[1045] 118 738	[1339] 151 720	[1633] 184 701	[1926] 218 680	[2198] 248 654	[2443] 276 640
[16] 61	[182] 21 901	[436] 49 887	[724] 82 870	[1019] 115 849	[1313] 148 829	[1604] 181 808	[1915] 216 785	[2181] 246 753	[2443] 276 734
[19] 72	[167] 19 1075	[407] 46 1061	[702] 79 1040	[996] 113 1017	[1283] 145 996	[1588] 179 967	[1866] 211 950	[2157] ;244 919	[2441] 276 876
[21] 79	[162] 18 1188	[391] 44 1175	[679] 77 1152	[967] 109 1129	[1255] 142 1105	[1556] 176 1075	[1840] 208 1052	[2268] 256 987	[2432] 275 988
[23] 87					[1226] 139 1214	[1523] 172 1185	[1814] 205 1155	[1985] 224 1125	[2387] 270 1107

C-1

2000 Series

Performance Data

Motors run with high efficiency in all areas designated with a number for torque and speed. For best motor life select a motor to run with a torque and speed range shown in the light shaded area.

Performance data is typical at 120 SUS. Actual data may vary slightly from unit to unit in production.

Continuous

Peak

Intermittent

No Operation

80cm³/r [4.9 in³/r]
ΔPressure Bar [PSI]

Flow LPM [GPM]

	[500] 35	[1000] 70	[1500] 105	[2000] 140	[2500] 170	[3000] 205	[3500] 240	[4000] 275	[4500] 310
[.25] ,95	[210] 25 3	[420] 45 1							
[.5] 1,9	[250] 30 17	[500] 50 8	[740] 85 3						
[1] 3,8	[330] 35 44	[670] 75 40	[990] 110 37	[1300] 145 34	[1550] 175 28	[1800] 205 22	[1950] 220 14	[2110] 240 2	
[2] 7,5	[330] 35 90	[670] 75 85	[995] 110 81	[1310] 150 78	[1580] 180 72	[1840] 210 65	[2100] 235 57	[2365] 265 49	[2630] 295 42
[4] 15	[325] 35 182	[670] 75 176	[1005] 115 170	[1330] 150 166	[1620] 185 159	[1920] 215 152	[2200] 250 140	[2480] 280 128	[2765] 310 117
[6] 23	[320] 35 273	[665] 75 267	[1010] 115 259	[1340] 150 254	[1655] 185 246	[1975] 225 238	[2270] 255 223	[2570] 290 207	[2880] 325 192
[8] 30	[310] 35 365	[660] 75 375	[1015] 115 349	[1345] 150 341	[1685] 190 333	[2020] 230 325	[2330] 265 306	[2640] 300 286	[2960] 335 266
[10] 38	[300] 35 456	[650] 75 448	[1010] 115 439	[1350] 155 429	[1700] 190 420	[2050] 230 411	[2370] 270 388	[2690] 305 364	[3010] 340 341
[12] 45	[285] 30 547	[640] 70 537	[1005] 115 530	[1350] 155 516	[1705] 195 507	[2065] 235 497	[2390] 270 470	[2715] 305 442	[3035] 345 415
[14] 53	[270] 30 638	[625] 70 629	[990] 110 622	[1340] 150 603	[1705] 195 593	[2065] 235 584	[2395] 270 553	[2720] 305 521	[3030] 340 490
[16] 61	[255] 30 729	[610] 70 720	[975] 110 714	[1330] 150 689	[1690] 190 679	[2055] 230 670	[2385] 270 635	[2700] 305 599	[2995] 340 564
[18] 68	[230] 25 818	[590] 65 810	[955] 110 795	[1310] 150 775	[1680] 190 765	[2025] 230 756	[2355] 265 717	[2660] 300 677	[2935] 330 638
[20] 76	[210] 25 908	[570] 65 901	[930] 105 880	[1290] 145 861	[1645] 185 851	[1985] 225 842	[2305] 260 799	[2600] 295 755	[2845] 320 712

[570] 65 901 } Torque [lb-in] Nm Speed RPM

90cm³/r [5.5 in³/r]
ΔPressure Bar [PSI]

Flow LPM [GPM]

	[250] 15	[500] 35	[1000] 70	[1500] 105	[2000] 140	[2500] 170	[3000] 205	[3500] 240	[4000] 275	[4500] 310
[.25] ,95	[124] 14 5	[233] 26 2	[471] 53 1							
[.5] 1,9	[133] 15 15	[273] 31 13	[555] 63 6	[832] 94 2						
[1] 3,8	[151] 17 39	[358] 40 39	[744] 84 35	[1091] 123 32	[1424] 161 28	[1697] 192 21	[1952] 221 13	[2189] 247 12	[2368] 268 2	
[2] 7,5	[151] 17 82	[358] 40 80	[744] 84 76	[1099] 124 72	[1439] 163 68	[1737] 196 61	[2015] 228 50	[2293] 259 38	[2570] 290 29	[2855] 323 20
[4] 15	[151] 17 167	[350] 40 163	[899] 102 158	[1113] 126 152	[1473] 166 148	[1800] 203 139	[2132] 241 126	[2454] 277 115	[2775] 314 102	[3100] 350 90
[6] 23	[142] 16 250	[348] 39 245	[736] 83 240	[613] 69 233	[1492] 169 227	[1851] 209 218	[2208] 249 203	[2552] 288 191	[2898] 327 176	[3249] 367 161
[8] 30	[133] 15 35	[338] 38 328	[729] 82 329	[1128] 127 314	[1509] 170 306	[1890] 214 295	[2269] 256 281	[2635] 298 266	[3000] 339 249	[3367] 380 231
[10] 38	[124] 14 418	[331] 37 410	[724] 82 404	[1130] 128 395	[1521] 172 385	[1912] 216 373	[2309] 261 361	[2670] 302 342	[3036] 343 322	[3398] 384 302
[12] 45	[106] 12 502	[315] 36 493	[714] 81 485	[1127] 127 477	[1525] 172 464	[1924] 217 451	[2326] 263 441	[2704] 306 417	[3082] 348 394	[3458] 391 372
[14] 53	[98] 11 585	[298] 34 575	[706] 80 567	[1115] 126 559	[1525] 172 543	[1924] 217 529	[2326] 263 521	[2707] 306 493	[3080] 348 467	[3450] 390 431
[16] 61	[80] 9 670	[285] 32 658	[688] 78 650	[1107] 125 641	[1510] 171 622	[1907] 215 607	[2311] 261 610	[2697] 305 568	[3070] 347 541	[3432] 388 513
[18] 68	[62] 7 753	[262] 30 740	[673] 76 732	[1087] 123 719	[1490] 168 701	[1892] 214 685	[2281] 258 680	[2662] 301 643	[3030] 342 613	[3381] 382 583
[20] 76	[53] 6 836	[242] 27 822	[644] 73 814	[1045] 118 796	[1447] 163 780	[1850] 209 765	[2246] 254 748	[2617] 296 719	[2988] 338 686	[3301] 373 653
[22] 83	[35] 4 920	[231] 26 916	[639] 72 907	[1047] 118 895	[1437] 162 876	[1836] 207 854	[2218] 251 749	[2599] 294 803	[2981] 337 774	
[24] 91	[18] 2 1003	[204] 23 1000	[612] 69 991	[1011] 114 978	[1366] 154 960	[1792] 202 940	[2182] 247 918	[2573] 291 882	[2963] 335 850	
[25] 95		[195] 22 1042	[594] 67 1033	[994] 112 1020	[1384] 156 1003	[1765] 199 984	[2173] 246 954	[2564] 290 921		

2000 Series

Performance Data

Motors run with high efficiency in all areas designated with a number for torque and speed. For best motor life select a motor to run with a torque and speed range shown in the light shaded area.

Performance data is typical at 120 SUS. Actual data may vary slightly from unit to unit in production.

Continuous

Peak

Intermittent

No Operation

100cm³/r [6.2 in³/r]
ΔPressure Bar [PSI]

Flow LPM [GPM]

	[250] 15	[500] 35	[1000] 70	[1500] 105	[2000] 140	[2500] 170	[3000] 205	[3500] 240	[4000] 275	[4500] 310
[.25] ,95	[140] 15 4	[260] 30 2								
[.5] 1,9	[150] 15 13	[300] 35 9	[620] 70 5	[940] 105 2						
[1] 3,8	[170] 20 35	[390] 45 34	[830] 95 31	[1210] 135 28	[1570] 175 23	[1870] 210 15	[2130] 240 6			
[2] 7,5	[170] 20 73	[390] 45 71	[830] 95 68	[1220] 140 63	[1590] 180 59	[1920] 215 51	[2220] 250 38	[2520] 285 24	[2810] 315 14	[3120] 355 4
[4] 15	[170] 20 148	[380] 45 145	[820] 90 141	[1240] 140 136	[1640] 185 131	[2010] 225 121	[2380] 270 104	[2750] 310 94	[3120] 355 80	[3490] 395 69
[6] 23	[160] 20 222	[380] 45 219	[820] 90 215	[1260] 140 209	[1670] 190 202	[2080] 235 192	[2480] 280 172	[2880] 325 163	[3280] 370 149	[3680] 415 134
[8] 30	[150] 15 297	[370] 40 294	[810] 90 288	[1260] 140 281	[1700] 190 273	[2130] 240 261	[2560] 290 243	[2990] 340 231	[3420] 385 216	[3840] 435 200
[10] 38	[140] 15 371	[368] 40 367	[810] 90 362	[1270] 145 354	[1720] 195 344	[2160] 245 330	[2610] 295 316	[3020] 340 300	[3440] 390 283	[3850] 435 266
[12] 45	[120] 15 445	[350] 40 442	[800] 90 436	[1270] 145 427	[1730] 195 415	[2180] 245 399	[2630] 295 389	[3070] 345 369	[3510] 395 350	[3950] 445 332
[14] 53	[110] 10 519	[330] 35 516	[800] 90 509	[1260] 140 500	[1740] 195 486	[2180] 245 469	[2630] 295 463	[3070] 345 437	[3500] 395 417	[3940] 445 378
[16] 61	[90] 10 594	[320] 35 591	[780] 90 583	[1260] 140 573	[1720] 195 558	[2160] 245 540	[2610] 295 537	[3060] 345 506	[3500] 395 485	[3940] 445 463
[18] 68	[70] 10 668	[300] 35 665	[770] 85 657	[1240] 140 646	[1700] 190 630	[2140] 240 611	[2580] 290 609	[3020] 340 574	[3460] 390 552	[3900] 440 529
[20] 76	[60] 5 742	[280] 30 739	[730] 80 731	[1180] 135 715	[1630] 185 703	[2090] 235 684	[2550] 290 662	[2980] 335 643	[3440] 390 619	[3830] 435 595
[22] 83	[40] 5 816	[260] 30 813	[720] 80 805	[1180] 135 794	[1620] 185 777	[2070] 235 758	[2500] 280 749	[2930] 330 712	[3360] 380 687	
[24] 91	[20] 1,0 890	[230] 230 887	[690] 80 879	[1140] 130 868	[1540] 175 852	[2020] 230 834	[2460] 280 814	[2900] 330 782	3340 375 754	
[25] 95		[220] 25 924	[670] 75 916	[1120] 125 905	[1560] 175 890	[1990] 225 873	[2450] 275 846	[2890] 325 817		

[1560] 175 890 } Torque [lb-in] Nm Speed RPM

130cm³/r [8.0 in³/r]
ΔPressure Bar [PSI]

Flow LPM [GPM]

	[250] 15	[500] 35	[1000] 70	[1500] 105	[2000] 140	[2500] 170	[3000] 205	[3500] 240	[4000] 275	[4500] 310
[.25] ,95	[170] 20 3									
[.5] 1,9	[190] 20 12	[410] 45 8	[870] 100 2							
[1] 3,8	[230] 25 28	[510] 60 27	[1070] 120 23	[1580] 180 19	[2050] 230 16	[2520] 285 13	[2920] 309 9	[3310] 375 3		
[2] 7,5	[230] 25 56	[510] 60 56	[1080] 120 53	[1600] 180 47	[2090] 235 42	[2580] 290 39	[2930] 330 36	[3320] 375 28	[3640] 410 21	[3990] 450 13
[4] 15	[220] 25 114	[500] 55 113	[1080] 120 111	[1620] 185 104	[2150] 245 97	[2660] 300 95	[3100] 350 92	[3540] 400 85	[3980] 450 77	[4420] 500 70
[6] 23	[220] 25 172	[490] 55 171	[1080] 120 169	[1640] 185 161	[2190] 245 153	[2740] 310 149	[3260] 370 146	[3770] 425 132	[4280] 485 118	[4800] 540 104
[8] 30	[200] 25 230	[480] 55 224	[1080] 120 222	[1650] 185 219	[2220] 250 210	[2780] 315 204	[3310] 375 201	[3840] 435 192	[4360] 495 184	[4890] 550 175
[10] 38	[180] 20 287	[470] 55 286	[1070] 120 282	[1650] 185 276	[2230] 250 269	[2800] 315 261	[3420] 385 255	[3940] 445 243	[4450] 505 231	[4970] 560 219
[12] 45	[160] 20 345	[460] 50 344	[1060] 120 338	[1640] 185 333	[2230] 250 327	[2800] 315 317	[3350] 380 307	[3910] 440 295	[4440] 500 284	[4960] 560 272
[14] 53	[150] 15 403	[440] 50 402	[1030] 115 395	[1620] 185 391	[2220] 250 385	[3000] 340 373	[3350] 380 360	[3910] 440 348	[4440] 500 336	
[16] 61	[130] 15 461	[420] 45 460	[1010] 115 452	[1600] 180 447	[2200] 250 443	[2780] 315 430	[3330] 375 411	[3890] 440 397	[4440] 500 384	
[18] 68	[110] 10 518	[400] 45 517	[990] 110 509	[1580] 180 504	[2160] 245 500	[2750] 310 484	[3300] 375 471	[3860] 435 456	[4410] 500 440	
[20] 76	[90] 10 576	[380] 45 575	[960] 110 568	[1550] 175 560	[2130] 240 551	[2710] 305 539	[3280] 370 524	[3840] 435 508		
[22] 83	[60] 5 634	[350] 40 633	[940] 105 624	[1520] 170 619	[2100] 235 604	[2680] 305 597	[3250] 365 579	[3820] 430 560		
[24] 91	[40] 5 692	[325] 35 691	[920] 105 682	[1490] 170 676	[2070] 235 665	[2650] 300 651	[3220] 365 633	[3780] 425 616		
[25] 95	[20] 1,0 720	[310] 35 719	[900] 100 712	[1480] 165 705	[2050] 230 692	[2630] 295 679	[3200] 360 682	[3700] 420 656		

C-1

2000 Series

Performance Data

Motors run with high efficiency in all areas designated with a number for torque and speed. For best motor life select a motor to run with a torque and speed range shown in the light shaded area.

Performance data is typical at 120 SUS. Actual data may vary slightly from unit to unit in production.

Continuous

Peak

Intermittent

No Operation

160cm³/r [9.6 in³/r]
ΔPressure Bar [PSI]

Flow LPM [GPM]	[250] 15	[500] 35	[1000] 70	[1500] 105	[2000] 140	[2500] 170	[3000] 205	[3500] 240	[3750] 260
[.25] 0,95	[200] 25 3								
[.5] 1,9	[240] 25 9	[490] 55 7	[990] 110 5	[1570] 175 3	[2140] 240 1				
[1] 3,8	[280] 30 23	[590] 65 21	[1170] 130 19	[1730] 195 17	[2290] 260 13	[2830] 320 8	[3330] 375 3	[3820] 430 2	[4070] 460 1
[2] 7.5	[300] 35 46	[610] 70 45	[1210] 135 42	[1790] 200 39	[2350] 265 35	[2920] 330 34	[3480] 395 33	[4050] 460 28	[4330] 490 22
[4] 15	[320] 35 93	[630] 70 92	[1260] 140 89	[1890] 215 85	[2530] 285 79	[3170] 360 77	[3820] 430 75	[4460] 505 59	[4780] 540 43
[6] 23	[320] 35 142	[650] 75 140	[1300] 145 137	[1960] 220 131	[2620] 295 124	[3280] 370 118	[3940] 445 113	[4600] 520 104	[4930] 560 96
[8] 30	[310] 35 190	[650] 75 187	[1330] 150 184	[2010] 225 178	[2670] 300 170	[3330] 375 166	[4000] 450 164	[4660] 525 153	[4990] 565 142
[10] 38	[290] 35 237	[640] 70 235	[1340] 150 231	[2030] 230 226	[2850] 320 217	[3410] 385 212	[4030] 455 297	[4700] 530 193	[5030 570 187
[12] 45	[270] 30 286	[620] 70 283	[1320] 150 279	[2030] 230 274	[2700] 305 265	[3370] 380 254	[4040] 455 246	[4710] 530 235	[5040] 570 224
[14] 53	[240] 25 334	[590] 65 331	[1300] 145 326	[2020] 230 322	[2690] 305 312	[3360] 380 305	[4030] 455 297	[4700] 530 286	
[16] 61	[220] 25 382	[570] 65 378	[1270] 145 374	[1980] 225 369	[2660] 300 360	[3330] 375 349	[4010] 455 339	[4680] 530 326	
[18] 68	[190] 20 429	[540] 60 426	[1240] 140 422	[1960] 220 416	[2640] 300 407	[3320] 375 394	[3990] 450 387		
[20] 76	[170] 20 477	[510] 60 474	[1210] 135 469	[1920] 215 462	[2630] 300 451	[3310] 375 440	[3940] 445 430		
[22] 83	[150] 15 525	[480] 55 522	[1170] 130 517	[1880] 210 510	[2600] 295 501	[3290] 370 484	[3920] 445 473		
[24] 91	[120] 15 572	[450] 50 569	[1150] 130 564	[1860] 210 556	[2570] 290 546	[3260] 370 531	[3900] 440 522		
[25] 95	[90] 10 596	[440] 50 593	[1140] 130 587	[1840] 210 580	[2560] 290 566	[3230] 365 553	[3880] 440 544		
[30] 114		[330] 35 713	[1040] 120 706	[1750] 200 696	[2470] 280 682	[3140] 355 672	[3800] 430 658		

[330] 35 713 } Torque [lb-in] Nm Speed RPM

195cm³/r [11.9 in³/r]
ΔPressure Bar [PSI]

Flow LPM [GPM]	[250] 15	[500] 35	[750] 50	[1000] 70	[1250] 85	[1500] 105	[1750] 120	[2000] 140	[2250] 155	[2500] 170	[2750] 190	[3000] 205	[3250] 225	[3500] 240	[3750] 260
[.25] ,95	[240] 25 4	[590] 65 2													
[.5] 1,9	[290] 35 8	[640] 70 6	[990] 110 5	[1340] 150 2											
[1] 3,8	[380] 45 17	[730] 80 16	[1100] 125 15	[1430] 160 14	[1790] 200 13	[2120] 200 11	[2450] 275 9	[2720] 305 7	[2990] 340 5	[3260] 370 4	[3540] 400 3	[3810] 430 2	[4080] 460 2	[4350] 490 1	[4620] 520 1
[2] 7,5	[390] 45 37	[755] 85 35	[1135] 130 34	[1470] 165 33	[1860] 210 32	[2195] 250 31	[2535] 285 28	[2880] 325 26	[3120] 355 24	[3680] 415 21	[4090] 460 20	[4500] 510 19	[4800] 540 17	[5100] 575 14	[5400] 610 14
[4] 15	[405] 45 76	[795] 90 74	[1185] 135 73	[1540] 175 72	[1970] 225 71	[2310] 260 70	[2675] 300 66	[3040] 345 64	[3420] 385 62	[3790] 430 61	[4160] 470 59	[4520] 510 57	[4890] 550 55	[5260] 595 51	[5630] 635 45
[6] 23	[405] 45 115	[815] 90 113	[1220] 140 111	[1590] 180 110	[2035] 230 109	[2395] 270 108	[2780] 315 104	[3170] 360 102	[3560] 400 100	[3940] 445 99	[4320] 490 96	[4700] 530 94	[5070] 570 91	[5450] 615 87	[5830] 660 81
[8] 30	[400] 45 154	[820] 90 151	[1230] 140 149	[1625] 185 148	[2065] 235 147	[2450] 275 146	[2850] 320 143	[3260] 370 140	[3670] 415 137	[4040] 455 135	[4410] 500 132	[4780] 540 130	[5150] 580 127	[5520] 625 123	[5890] 665 117
[10] 38	[380] 45 193	[810] 95 190	[1230] 140 188	[1645] 185 187	[2095] 235 186	[2480] 280 184	[2895] 325 181	[3310] 375 177	[3730] 420 175	[4100] 465 173	[4470] 505 170	[4840] 545 168	[5210] 590 164	[5590] 630 160	
[12] 45	[355] 40 231	[790] 90 229	[1215] 135 227	[1650] 185 226	[2100] 235 224	[2485] 280 221	[2915] 330 219	[3340] 375 218	[3760] 425 215	[4120] 465 211	[4480] 505 208	[4850] 550 204			
[14] 53	[320] 35 269	[765] 85 267	[1190] 135 267	[1645] 185 264	[2090] 235 261	[2475] 280 260	[2915] 330 257	[3350] 380 254	[3770] 425 250	[4130] 465 248	[4480] 505 245	[4860] 550 241			
[16] 61	[290] 30 308	[730] 80 306	[1160] 130 305	[1625] 185 303	[2070] 235 299	[2455] 275 296	[2900] 330 294	[3340] 375 290	[3760] 425 286	[4130] 465 283	[4490] 505 279	[4860] 550 276			
[18] 68	[290] 30 346	[690] 80 345	[1120] 125 345	[1590] 180 342	[2035] 230 337	[2420] 270 334	[2870] 325 333	[3310] 375 327	[3730] 420 321	[4100] 465 315	[4480] 505 308				
[20] 76	[210] 25 385	[650] 75 384	[1080] 120 383	[1550] 175 380	[1995] 225 375	[2380] 270 372	[2830] 320 371	[3270] 370 367	[3690] 415 363	[4070] 460 359	[4450] 500 355				
[22] 83	[170] 20 424	[610] 70 423	[1040] 120 422	[1500] 170 418	[1955] 220 414	[2340] 265 410	[2785] 315 408	[3220] 365 404	[3640] 410 399	4050] 460 395					
[24] 91	[135] 15 462	[570] 65 461	[1000] 115 460	[1440] 165 457	[1910] 215 453	[2300] 260 449	[3170] 360 441	[3590] 405 436	[3980] 450 432	[3980] 450 432					
[25] 95	[120] 15 484	[550] 60 482	[980] 110 479	[1410] 160 476	[1890] 215 473	[2280] 260 469	[3150] 355 459	[3570] 405 454	[3960] 445 449	[3960] 445 449					
[30] 114		[420] 45 577	[860] 95 575	[1290] 145 571	[1700] 190 567	[2120] 240 562	[2530] 285 556	[2940] 330 550	[3400] 385 542						

2000 Series

Performance Data

Motors run with high efficiency in all areas designated with a number for torque and speed. For best motor life select a motor to run with a torque and speed range shown in the light shaded area.

Performance data is typical at 120 SUS. Actual data may vary slightly from unit to unit in production.

Continuous

Peak

Intermittent

No Operation

245cm³/r [14.9 in³/r]
ΔPressure Bar [PSI]

Flow LPM [GPM]

	[250] 15	[500] 35	[750] 50	[1000] 70	[1250] 85	[1500] 105	[1750] 120	[2000] 140	[2250] 155	[2500] 170	[2750] 190	[3000] 205	[3250] 225	[3500] 240	[3750] 260
[.5] 1,9	[410] 45 4	[850] 95 2													
[1] 3,8	[450] 50 14	[930] 105 13	[1420] 160 12	[1850] 210 11	[2320] 260 10	[2780] 315 9	[3250] 365 8	[3650] 410 6	[4100] 465 5	[4540] 515 4	[4980] 560 4	[5430] 615 3	[5870] 665 2	[6310] 715 1	
[2] 7,5	[460] 50 29	[960] 110 28	[1460] 165 27	[1900] 215 26	[2400] 270 25	[2860] 325 23	[3340] 375 22	[3780] 425 20	[4320] 490 19	[4770] 540 18	[5210] 590 17	[5660] 640 15	[6110] 690 14	[6570] 740 12	[6950] 785 10
[4] 15	[470] 55 60	[1000] 115 59	[1540] 175 58	[1980] 225 56	[2510] 285 54	[3010] 340 53	[3480] 395 51	[3980] 450 49	[4450] 505 48	[4910] 555 47	[5380] 610 47	[5850] 660 46	[6320] 715 45	[6780] 765 44	[7250] 820 42
[6] 23	[460] 50 91	[1020] 115 90	[1550] 175 89	[2040] 230 87	[2580] 290 84	[3110] 350 83	[3590] 405 81	[4120] 465 78	[4580] 515 76	[5050] 570 73	[5520] 625 71	[5980] 675 69	[6440] 730 67	[6910] 780 65	
[8] 30	[460] 50 122	[1010] 115 121	[1560] 175 120	[2080] 235 118	[2630] 295 115	[3170] 360 113	[3670] 415 111	[4210] 475 108	[4680] 530 106	[5160] 585 104	[5630] 635 102	[6110] 690 101	[6590] 745 99		
[10] 38	[440] 50 153	[1000] 115 152	[1550] 175 150	[2110] 240 148	[2650] 300 146	[3200] 360 144	[3730] 420 142	[4250] 480 139	[4730] 535 137	[5210] 560 135	[5720] 645 133	[6230] 705 103			
[12] 45	[410] 45 184	[960] 110 183	[1530] 175 182	[2100] 235 180	[2640] 300 177	[3190] 360 175	[3760] 425 173	[4260] 480 170	[4740] 535 168	[5220] 600 165	[5730] 645 162				
[14] 53	[380] 40 215	[910] 105 214	[1500] 170 213	[2080] 235 211	[2600] 295 209	[3160] 355 207	[3760] 425 204	[4230] 480 201	[4710] 530 198	[5190] 585 195					
[16] 61	[340] 40 246	[860] 95 245	[1460] 165 244	[2040] 230 242	[2570] 290 240	[3120] 355 238	3740] 425 235	[4180] 470 232	[4660] 525 227	[5140] 580 223					
[18] 68	[290] 30 277	[810] 90 276	[1420] 160 275	[2000] 225 273	[2520] 285 271	[3060] 345 269	[3700] 420 266	[4130] 465 263	[4610] 520 258	[5090] 575 253					
[20] 76	[250] 30 308	[800] 90 306	[1350] 155 304	[1910] 215 302	[2460] 280 300	[3010] 340 298	[3630] 410 295	[4110] 465 291	[4610] 520 288						
[22] 83	[200] 25 339	[710] 80 337	[1300] 145 337	[1870] 210 334	[2390] 270 332	[2940] 330 330	[3560] 400 327	[4010] 455 323	[4510] 510 318						
[24] 91	[150] 15 370	[670] 75 369	[1240] 140 367	[1790] 200 364	[2330] 265 362	[2880] 325 360	[3460] 390 357	[3960] 445 353	[4460] 505 344						
[25] 95	[120] 15 385	[660] 75 384	[1210] 135 382	[1750] 200 379	[2300] 260 377	[2860] 325 375	[3410] 385 372	[3950] 445 367	[4470] 505 363						
[30] 114		[520] 60 462	[1080] 120 460	[1620] 185 458	[2180] 245 456	[2720] 305 453	[3260] 370 450	[3790] 430 447							

[3790] 430 447 } Torque [lb-in] Nm Speed RPM

305cm³/r [18.7 in³/r]
ΔPressure Bar [PSI]

Flow LPM [GPM]

	[250] 15	[500] 35	[750] 50	[1000] 70	[1250] 85	[1500] 105	[1750] 120	[2000] 140	[2250] 155	[2500] 170	[2750] 190	[3000] 205	[3250] 225	[3500] 240
[.5] 1,9	[500] 55 4	[1050] 120 2												
[1] 3,8	[610] 70 12	[1180] 135 11	[1750] 200 11	[2330] 260 10	[2870] 325 10	[3440] 390 9	[3930] 445 8	[4410] 500 6	[4900] 555 3	[5380] 610 1				
[2] 7,5	[620] 70 24	[1210] 135 24	[1800] 205 23	[2400] 270 22	[2970] 335 22	[3510] 395 20	[4050] 460 19	[4600] 520 18	[5140] 580 17	[5680] 640 15	[6220] 705 13	[6750] 765 11	[7290] 825 8	[7820] 885 6
[4] 15	[680] 75 49	[1250] 140 49	[1880] 210 48	[2500] 280 47	[3120] 355 47	[3690] 415 45	[4260] 480 43	[4840] 545 42	[5410] 610 40	[5980] 675 38	[6550] 740 36	[7120] 805 34	[7690] 870 33	
[6] 23	[620] 70 74	[1270] 145 74	[1920] 215 72	[2560] 290 72	[3230] 365 71	[3810] 430 69	[4390] 495 66	[4970] 560 64	[5560] 630 61	[6130] 695 58	[6710] 760 55	[7290] 825 52		
[8] 30	[600] 70 98	[1270] 145 98	[1940] 220 97	[2600] 295 96	[3290] 370 95	[3880] 440 93	[4470] 505 90	[5070] 575 86	[5660] 640 83	[6250] 705 80	[6840] 775 77			
[10] 38	[570] 65 123	[1250] 140 122	[1940] 220 121	[2610] 295 120	[3310] 375 119	[3920] 440 117	[4530] 510 113	[5150] 580 110	[5760] 650 106	[6370] 720 102				
[12] 45	[530] 60 148	[1220] 140 147	[1920] 215 145	[2600] 295 144	[3300] 375 143	[3920] 440 142	[4530] 510 138	[5150] 580 133	[5760] 650 128	[6370] 720 124				
[14] 53	[480] 55 172	[1180] 135 172	[1870] 210 170	[2560] 290 168	[3260] 370 167	[3900] 440 165	[4510] 510 160	[5120] 580 156	[5730] 645 152					
[16] 61	[430] 50 196	[1120] 125 196	[1820] 205 194	[2500] 280 192	[3210] 365 191	[3870] 440 188	[4480] 505 183	[5080] 575 178	[5690] 645 174					
[18] 68	[370] 40 221	[1060] 120 221	[1760] 200 218	[2440] 275 217	[3140] 355 215	[3800] 440 212	[4420] 500 207	[5050] 570 202						
[20] 76	[320] 35 246	[980] 110 245	[1680] 190 243	[2360] 265 241	[3050] 345 239	[3710] 420 236	[4370] 495 231	[5020] 565 226						
[22] 83	[240] 25 271	[920] 105 270	[1620] 185 268	[2300] 260 266	[2990] 340 263	[3560] 400 260	[4190] 475 258	[4820] 545 255						
[24] 91	[180] 20 296	[870] 100 294	[1550] 175 293	[2240] 255 290	[2920] 330 288	[3420] 385 285	[4020] 455 283	[4630] 525 280						
[25] 95	[150] 15 308	[840] 95 307	[1520] 170 305	[2200] 250 303	[2890] 325 300	[3340] 375 298	[3930] 445 295	[4520] 510 293						
[30] 114		[680] 75 365	[1360] 155 362	[2040] 230 360	[2720] 305 357	[3140] 355 356	[3810] 430 352							

2000 Series

Performance Data

Motors run with high efficiency in all areas designated with a number for torque and speed. For best motor life select a motor to run with a torque and speed range shown in the light shaded area.

Performance data is typical at 120 SUS. Actual data may vary slightly from unit to unit in production.

Continuous

Peak

Intermittent

No Operation

490cm³/r [29.8 in³/r]
ΔPressure Bar [PSI]

Flow LPM [GPM]	[250] 15	[500] 35	[750] 50	[1000] 70	[1250] 85	[1500] 105	[1750] 120	[2000] 140
[.5] 1,9	[670] 75 2	[1600] 180 1						
[1] 3,8	[920] 105 7	[2000] 225 6	[2990] 340 5	[3900] 440 4	[4880] 550 2			
[2] 7,5	[950] 105 14	[2060] 235 13	[3110] 350 12	[4080] 460 10	[5110] 575 9	[6320] 715 7		
[4] 15	[980] 110 30	[2130] 240 29	[3230] 365 28	[4270] 480 27	[5350] 605 26	[6370] 720 24	[7380] 835 22	[7980] 900 20
[6] 23	[980] 110 45	[2120] 240 44	[3230] 365 43	[4300] 485 42	[5370] 605 41	[6420] 725 39	[7470] 845 37	[8225] 930 35
[8] 30	[980] 110 61	[2110] 240 60	[3220] 365 59	[4330] 490 58	[5400] 610 57	[6470] 730 55	[7550] 855 52	
[10] 38	[920] 105 76	[2050] 230 75	[3170] 360 74	[4300] 485 73	[5390] 610 72	[6460] 730 70	[7550] 855 68	
[12] 45	[860] 95 91	[1990] 225 90	[3120] 355 90	[4260] 480 89	[5370] 605 87	[6460] 730 85	[7560] 855 84	
[14] 53	[790] 90 106	[1930] 220 105	[3055] 345 105	[4185] 475 104	[5300] 600 102	[6400] 725 100		
[16] 61	[720] 80 122	[1870] 210 121	[2990] 340 120	[4110] 465 119	[5230] 590 118	[6340] 715 116		
[18] 68	[630] 70 137	[1770] 200 136	[2890] 325 135	[4020] 455 134	[5140] 580 133	[6260] 705 131		
[20] 76	[550] 60 153	[1670] 190 152	[2800] 315 151	[3940] 445 150	[5060] 570 149	[6180] 700 146		
[22] 83	[450] 50 168	[1570] 175 168	[2700] 305 167	[3830] 435 165	[4960] 560 164	[6070] 685 161		
[24] 91	[360] 40 184	[1480] 165 184	[2600] 295 183	[3730] 420 181	[4860] 550 179	[5970] 675 177		
[26] 98	[270] 30 199	[1390] 155 195	[2510] 285 194	[3640] 410 192	[4770] 540 190			
[28] 106		[1260] 140 212	[2370] 270 211	[3520] 400 209	[4630] 525 207			
[30] 114		[1130] 125 230	[2240] 255 229	[3400] 385 277	[4500] 510 224			

395cm³/r [24.0 in³/r]
ΔPressure Bar [PSI]

Flow LPM [GPM]	[250] 15	[500] 35	[750] 50	[1000] 70	[1250] 85	[1500] 105	[1750] 120	[2000] 140	[2250] 155	[2500] 170	[2750] 190
[.5] 1,9	[560] 65 4	[1310] 150 3									
[1] 3,8	[770] 85 9	[1540] 175 9	[2290] 260 9	[3080] 350 8	[3780] 430 8	[4480] 505 7	[5170] 585 7	[5880] 665 6	[6580] 745 5	[7270] 820 4	[7980] 900 3
[2] 7,5	[790] 90 18	[1580] 180 18	[2360] 265 18	[3180] 360 17	[3930] 445 17	[4680] 530 16	[5430] 615 15	[6180] 700 14	[6840] 775 13	[7500] 845 11	[8170] 925 10
[4] 15	[810] 90 37	[1660] 190 37	[2480] 280 37	[3320] 375 36	[4130] 465 36	[4940] 560 35	[5740] 650 34	[6550] 740 33	[7230] 815 31	[7880] 890 28	
[6] 23	[820] 90 57	[1700] 190 56	[2550] 290 56	[3420] 385 55	[4250] 480 54	[5080] 575 52	[5920] 670 50	[6750] 765 49	[7420] 840 47	[8000] 905 45	
[8] 30	[820] 90 76	[1700] 190 75	[2580] 290 75	[3460] 390 74	[4300] 485 73	[5130] 580 71	[5960] 675 69	[6800] 770 68			
[10] 38	[800] 90 95	[1700] 190 94	[2590] 295 94	[3480] 395 93	[4320] 490 92	[5160] 585 90	[6000] 680 88	[6840] 775 86			
[12] 45	[770] 85 114	[1680] 190 113	[2570] 290 113	[3470] 390 112	[4310] 485 111	[5150] 580 109	[5990] 675 106	[6830] 770 103			
[14] 53	[740] 85 133	[1640] 185 132	[2530] 285 132	[3430] 390 131	[4280] 485 129	[5120] 580 127	[5960] 675 124				
[16] 61	[690] 80 153	[1590] 180 152	[2480] 280 152	[3370] 380 150	[4220] 475 149	[5060] 570 146	[5910] 670 144				
[18] 68	[640] 70 172	[1530] 170 171	[2420] 275 171	[3310] 375 170	[4160] 470 169	[5010] 565 167	[5870] 665 164				
[20] 76	[580] 65 191	[1470] 165 190	[2370] 270 190	[3260] 370 189	[4110] 465 188	[4960] 560 186	[5820] 660 184				
[22] 83	[510] 60 210	[1390] 155 209	[2290] 260 209	[3170] 360 208	[4030] 455 207	[4880] 550 206					
[24] 91	[440] 50 230	[1330] 150 229	[2220] 250 228	[3100] 350 227	[3950] 445 225	[4800] 540 224					
[26] 98	[350] 40 249	[1240] 140 248	[2130] 240 247	[3020] 340 246	[3880] 440 244	[4730] 535 242					
[28] 106	[270] 30 268	[1150] 130 267	[2050] 230 265	[2930] 330 264	[3790] 430 261	[4650] 525 259					
[30] 114	[180] 20 287	[1060] 120 286	[1960] 220 284	[2850] 320 283	[3710] 420 281	[4570] 515 277					
[35] 132		[840] 95 335	[1760] 200 334	[2640] 300 333	[3480] 395 332						

[1760] 200 334 } Torque [lb-in] Nm Speed RPM

2000 Series

Dimensions

Standard Mount

Ports

7/8 -14 UNF-2B SAE O-ring Staggered Ports (2)
7/16 -20 UNF-2B SAE O-ring Case Drain Port (1) or

1 1/16 -12 UN-2B SAE O-ring Ports (Positioned 180° Apart) (2)
7/16 -20 UNF-2B SAE O-ring Case Drain Port (1) or

7/8 -14 UNF-2B SAE O-ring End Ports (2)
7/16 -20 UNF-2B SAE O-ring Case Drain Port (1) or

G 1/2 (BSP) Staggered Ports (2)
G 1/4 (BSP) Case Drain Port (1) or

Manifold Mount
7/16 -20 UNF-2B SAE O-ring Case Drain Port (1)

Standard Rotation Viewed from Shaft End

Port A Pressurized — CW

Port B Pressurized — CCW

Standard Mount

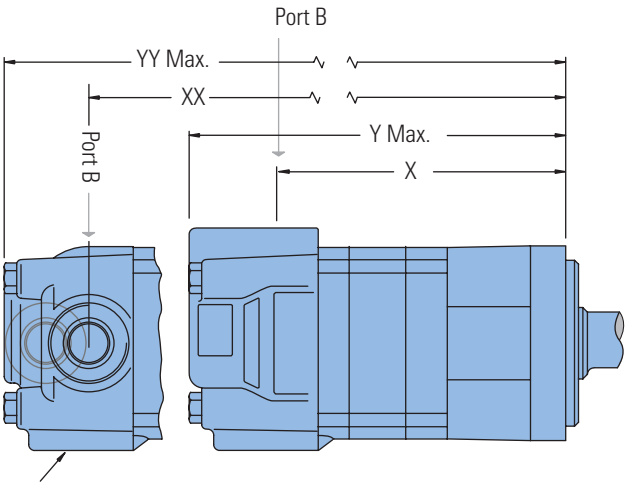

1-1/16-12 UN-2B SAE O-ring Ports
(Positioned 180° Apart)

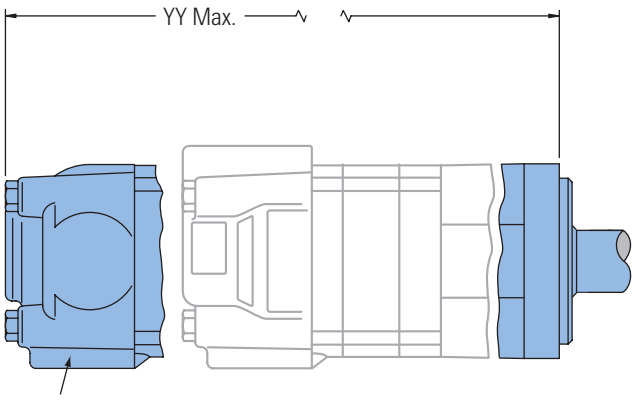

7/8-14 UNF-2B SAE O-ring End Ports

STANDARD MOUNT MOTOR DIMENSIONS

Displacement cm^3/r [in^3/r]	X mm [inch]	Y mm [inch]	XX mm [inch]	YY mm [inch]
34 [2.1]	126,7 [4.99]	174,0 [6.85]	129,0 [5.08]	175,3 [6.90]
41 [2.5]	128,0 [5.04]	175,3 [6.90]	130,5 [5.14]	176,8 [6.96]
66 [4.0]	133,9 [5.27]	181,1 [7.13]	136,1 [5.36]	182,4 [7.18]
80 [4.9]	136,9 [5.39]	184,2 [7.25]	139,2 [5.48]	185,4 [7.30]
100 [6.2]	141,5 [5.57]	189,0 [7.44]	143,8 [5.66]	190,3 [7.49]
130 [8.0]	147,9 [5.83]	195,4 [7.69]	150,2 [5.92]	196,6 [7.74]
160 [9.6]	147,9 [5.83]	195,4 [7.69]	150,2 [5.92]	196,6 [7.74]
195 [11.9]	154,7 [6.09]	202,2 [7.96]	157,0 [6.18]	203,2 [8.00]
245 [14.9]	163,7 [6.45]	211,1 [8.31]	166,0 [6.54]	212,4 [8.36]
305 [18.7]	175,1 [6.90]	222,3 [8.75]	177,4 [6.99]	223,5 [8.80]
395 [24.0]	191,0 [7.52]	238,6 [9.39]	193,3 [7.61]	239,8 [9.44]
490 [29.8]	208,4 [8.21]	255,8 [10.07]	210,7 [8.30]	270,1 [10.12

2000 Series

Dimensions

Standard Mount with
Integral Relief Valve

Ports

7/8 -14 UNF-2B SAE O-ring Staggered Ports (2)
7/16 -20 UNF-2B SAE O-ring Case Drain Port (1) or
G 1/2 (BSP) Staggered Ports (2)
G 1/4 (BSP) Case Drain Port (1)

Standard Rotation Viewed from Shaft End

Port A Pressurized — CW

Port B Pressurized — CCW

Standard Mount with Integral Relief Valve

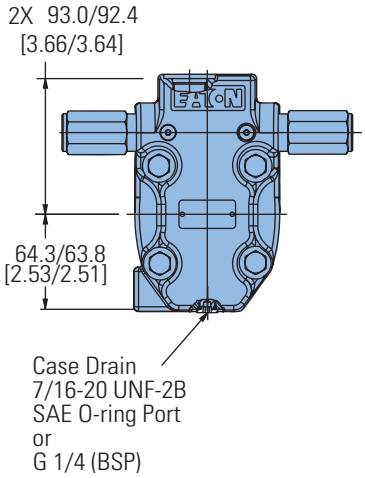

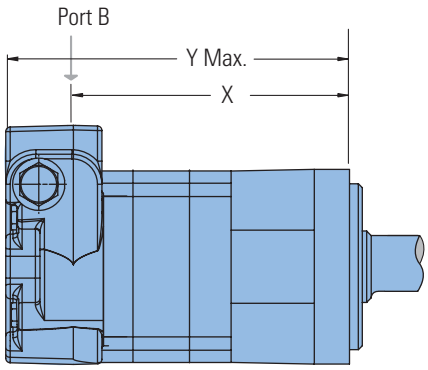

STANDARD MOUNT MOTOR DIMENSIONS

Displacement cm^3/r [in^3/r]	X mm [inch]	Y mm [inch]
34 [2.1]	126,7 [4.99]	174,0 [6.85]
41 [2.5]	128,2 [5.05]	175,5 [6.91]
66 [4.0]	133,9 [5.27]	181,2 [7.13]
80 [4.9]	137,0 [5.40]	184,5 [7.26]
100 [6.2]	141,6 [5.58]	189,0 [7.44]
130 [8.0]	147,9 [5.83]	195,4 [7.69]
160 [9.6]	147,9 [5.83]	195,4 [7.69]
195 [11.9]	154,8 [6.10]	202,2 [7.96]
245 [14.9]	163,7 [6.45]	211,1 [8.31]
305 [18.7]	175,1 [6.90]	222,6 [8.76]
395 [24.0]	191,1 [7.53]	238,6 [9.39]
490 [29.8]	208,4 [8.21]	255,8 [10.07]

2000 Series

Dimensions

Wheel Mount

Ports

7/8 -14 UNF-2B SAE O-ring Staggered Ports (2)
7/16 -20 UNF-2B SAE O-ring Case Drain Port (1) or

1 1/16 -12 UN-2B SAE O-ring Ports (Positioned 180° Apart) (2)
7/16 -20 UNF-2B SAE O-ring Case Drain Port (1) or

7/8 -14 UNF-2B SAE O-ring End Ports (2)
7/16 -20 UNF-2B SAE O-ring Case Drain Port (1) or

G 1/2 (BSP) Staggered Ports (2)
G 1/4 (BSP) Case Drain Port (1) or

Manifold Mount
7/16 -20 UNF-2B SAE O-ring Case Drain Port (1)

Standard Rotation Viewed from Shaft End

Port A Pressurized — CW

Port B Pressurized — CCW

Wheel Mount

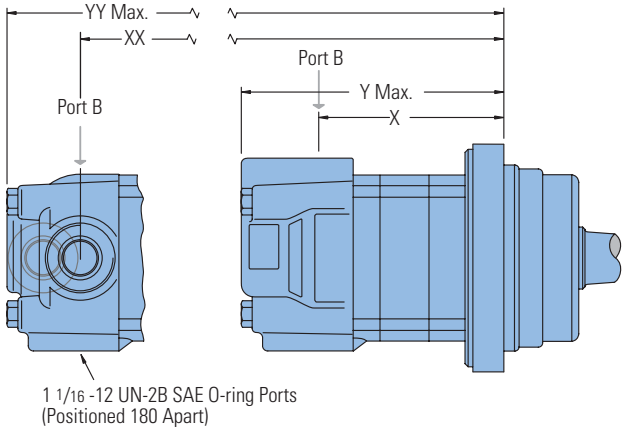

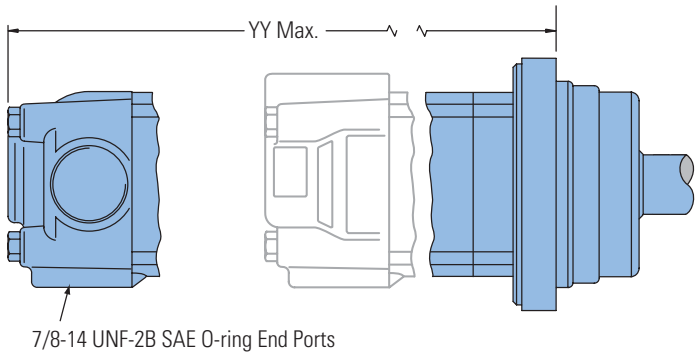

C-1

WHEEL MOUNT MOTOR DIMENSIONS

Displacement cm^3/r [in^3/r]	X mm [inch]	Y mm [inch]	XX mm [inch]	YY mm [inch]
34 [2.1]	86,5 [3.41]	133,8 [5.27]	88,8 [3.50]	135,1 [5.32]
41 [2.5]	88,0 [3.47]	135,3 [5.33]	90,3 [3.56]	136,6 [5.38]
66 [4.0]	93,7 [3.69]	141,0 [5.55]	96,0 [3.78]	142,3 [5.60]
80 [4.9]	96,8 [3.81]	144,0 [5.67]	99,1[3,90]	145,3 [5.72]
100 [6.2]	101,3 [3.99]	148,9 [5.86]	103,6 [4.08]	150,2 [5.91]
130 [8.0]	107,8 [4.25]	155,2 [6.11]	110,1 [4.34]	156,5 [6.16]
160 [9.6]	107,8 [4.25]	155,2 [6.11]	110,1 [4.34]	156,5 [6.16]
195 [11.9]	114.6 [4.51]	161,8 [6.37]	116,8 [4.60]	163,1 [6.42]
245 [14.9]	123,5 [4.87]	171,0 [6.73]	125,8 [4.96]	172,3 [6.78]
305 [18.7]	135,0 [5.32]	182,1 [7.17]	137,4 [5.41]	183,4 [7.22]
395 [24.0]	150,9 [5.94]	198,4 [7.81]	153,2 [6.03]	199,7 [7.86]
490 [29.8]	168,2 [6.63]	215,7 [8.49]	170,7 [6.72]	217,0 [8.54]

2000 Series

Dimensions

Wheel Mount with Intergal
Relief Valve

Ports

7/8 -14 UNF-2B SAE O-ring Staggered Ports (2)
7/16 -20 UNF-2B SAE O-ring Case Drain Port (1)

G 1/2 (BSP) Staggered Ports (2)
G 1/4 (BSP) Case Drain Port (1)

Standard Rotation Viewed from Shaft End

Port A Pressurized — CW
Port B Pressurized — CCW

Wheel Mount with Integral Relief Valve

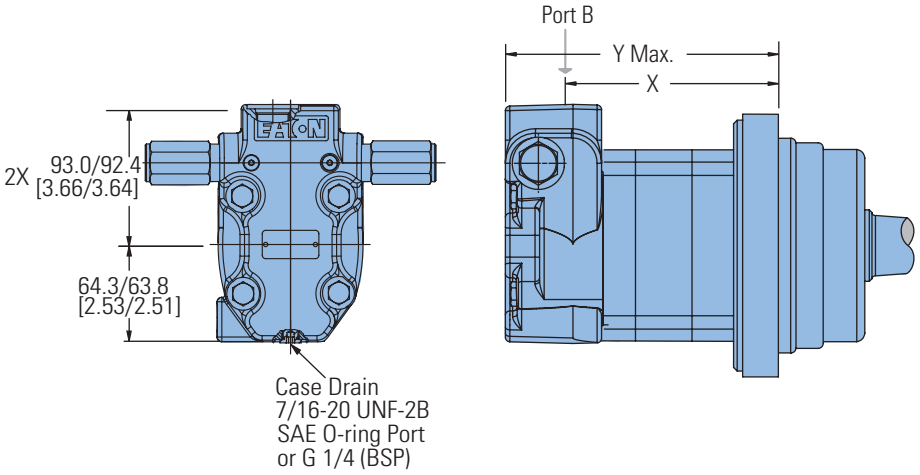

WHEEL MOUNT MOTOR DIMENSIONS

Displacement cm^3/r [in^3/r]	X mm [inch]	Y mm [inch]
34 [2.1]	86,5 [3.41]	133,8 [5.27]
41 [2.5]	88,0 [3.47]	135,3 [5.33]
66 [4.0]	93,7 [3.69]	141,0 [5.55]
80 [4.9]	96,9 [3.82]	144,3 [5.68]
100 [6.2]	101,4 [4.00]	148,9 [5.86]
130 [8.0]	107,8 [4.25]	155,2 [6.11]
160 [9.6]	107,8 [4.25]	155,2 [6.11]
195 [11.9]	114.6 [4.52]	162,1 [6.38]
245 [14.9]	123,5 [4.87]	171,0 [6.73]
305 [18.7]	135,0 [5.32]	182,4 [7.18]
395 [24.0]	151,0 [5.95]	198,4 [7.81]
490 [29.8]	168,2 [6.63]	215,7 [8.49]

2000 Series

Dimensions

Bearingless

Ports

7/8 -14 UNF-2B SAE O-ring Staggered Ports (2)
7/16 -20 UNF-2B SAE O-ring Case Drain Port (1) or

1 1/16 -12 UN-2B SAE O-ring Ports (Positioned 180° Apart) (2)
7/16 -20 UNF-2B SAE O-ring Case Drain Port (1) or

7/8 -14 UNF-2B SAE O-ring End Ports (2)
7/16 -20 UNF-2B SAE O-ring Case Drain Port (1) or

G 1/2 (BSP) Staggered Ports (2)
G 1/4 (BSP) Case Drain Port (1) or

Manifold Mount
7/16 -20 UNF-2B SAE O-ring Case Drain Port (1)

Bearingless

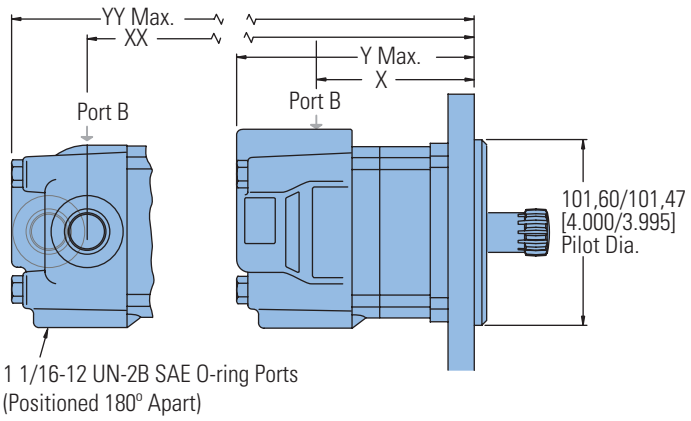

Standard Rotation Viewed from Shaft End

Port A Pressurized — CW
Port B Pressurized — CCW

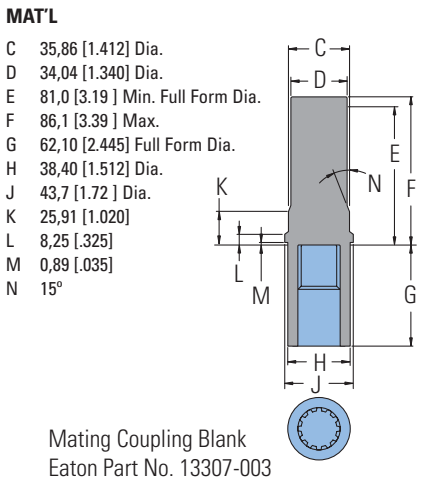

Mating Coupling Blank
Eaton Part No. 13307-003

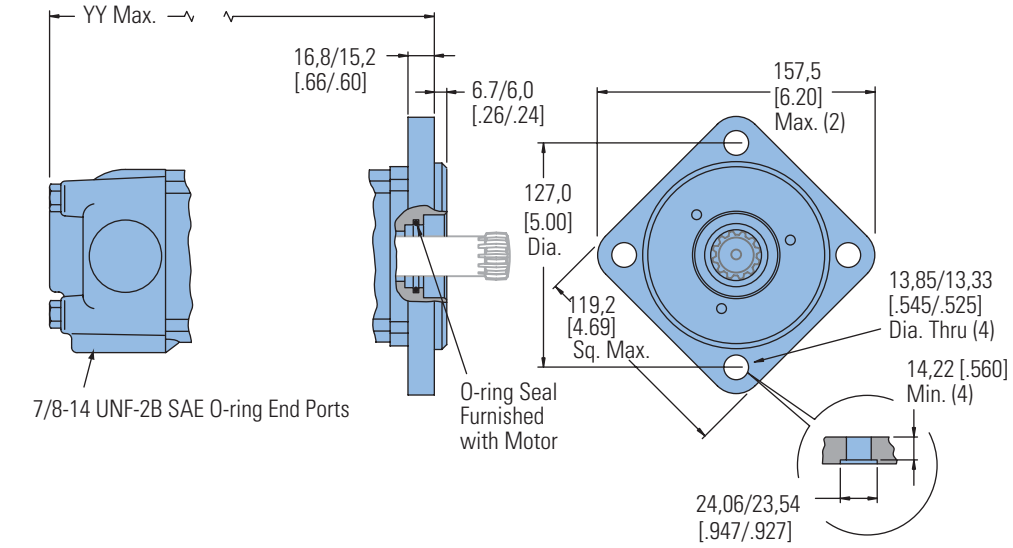

For 2000 Series Bearingless Motor application information contact your Eaton representative (mating coupling blanks available from Eaton Hydraulics).

Note:

After machining blank, part must be hardened per Eaton specification.

BEARINGLESS MOTOR DIMENSIONS

Displacement cm³/r [in³/r]	X mm [inch]	Y mm [inch]	XX mm [inch]	YY mm [inch]
34 [2.1]	68,7 [2.71]	116,3 [4.58]	70,9 [2.79]	117,6 [4.63]
41 [2.5]	70,1 [2.76]	117,6 [4.63]	72,4 [2.85]	119,1 [4.69]
66 [4.0]	75,7 [2.98]	123,4 [4.86]	78,1 [3.08]	124,8 [4.91]
80 [4.9]	79,0 [3.11]	126,5 [4.98]	81,3 [3.20]	127,8 [5.03]
100 [6.2]	83,5 [3.29]	131,4 [5.17]	85,8 [3.38]	132,6 [5.22]
130 [8.0]	89,9 [3.54]	137,7 [5.42]	92,2 [3.63]	139,0 [5.47]

BEARINGLESS MOTOR DIMENSIONS

Displacement cm³/r [in³/r]	X mm [inch]	Y mm [inch]	XX mm [inch]	YY mm [inch]
160 [9.6]	89,9 [3.54]	137,7 [5.42]	92,2 [3.63]	139,0 [5.47]
195 [11.9]	96,8 [3.81]	144,3 [5.68]	99,0 [3.90]	145,5 [5.73]
245 [14.9]	105,6 [4.16]	153,5 [6.04]	107,9 [4.25]	154,7 [6.09]
305 [18.7]	117,1 [4.61]	164,6 [6.48]	119,4 [4.70]	165,9 [6.53]
395 [24.0]	133,1 [5.24]	180,9 [7.12]	135,4 [5.33]	182,1 [7.17]
490 [29.8]	150,3 [5.92]	198,2 [7.80]	152,7 [6.01]	199,3 [7.85]

2000 Series

Dimensions

Bearingless with Integral
Relief Valve

Ports

7/8 -14 UNF-2B SAE O-ring Staggered Ports (2)
7/16 -20 UNF-2B SAE O-ring Case Drain Port (1)

G 1/2 (BSP) Staggered Ports (2)
G 1/4 (BSP) Case Drain Port (1)

Standard Rotation Viewed from Shaft End

Port A Pressurized — CW
Port B Pressurized — CCW

Bearingless with Integral Relief Valve

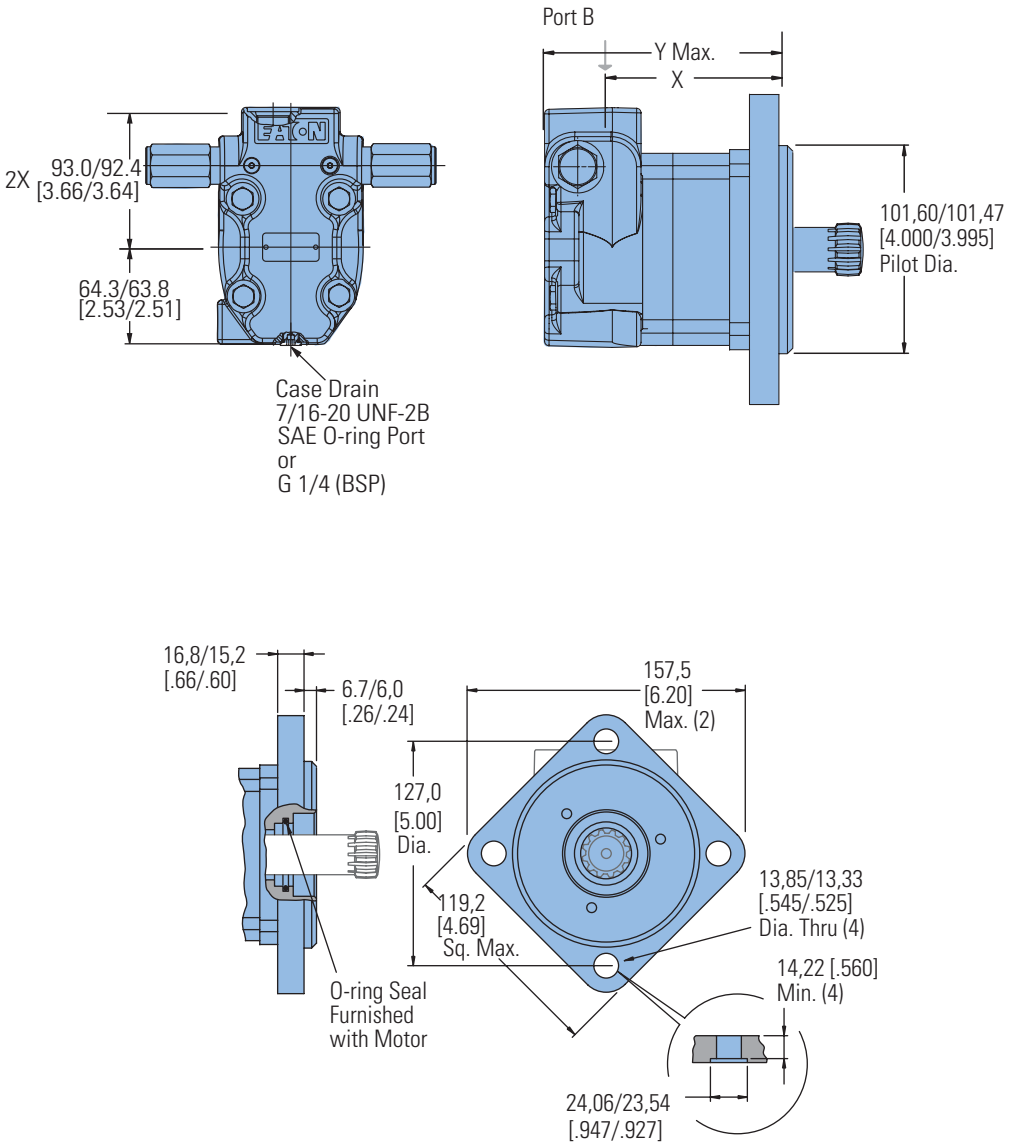

BEARINGLESS MOTORS DIMENSIONS

Displacement cm³/r [in³/r]	X mm [inch]	Y mm [inch]
34 [2.1]	68,6 [2.70]	116,3 [4.58]
41 [2.5]	70,1 [2.76]	117,8 [4.64]
66 [4.0]	75,8 [2.99]	123,5 [4.86]
80 [4.9]	79,0 [3.11]	126,8 [4.99]
100 [6.2]	83,5 [3.29]	131,4 [5.17]
130 [8.0]	89,9 [3.54]	137,7 [5.42]

BEARINGLESS MOTORS DIMENSIONS

Displacement cm³/r [in³/r]	X mm [inch]	Y mm [inch]
160 [9.6]	89,9 [3.54]	137,7 [5.42]
195 [11.9]	96,8 [3.81]	144,6 [5.69]
245 [14.9]	105,6 [4.16]	153,5 [6.04]
305 [18.7]	117,1 [4.61]	164,9 [6.49]
395 [24.0]	133,1 [5.24]	180,9 [7.12]
490 [29.8]	150,3 [5.92]	198,2 [7.80]

2000 Series

Installation Information

1 Internal spline in mating part to be per spline data. Specification material to be ASTM A304, 8620H vacuum degassed alloy steel carbonize to a hardness of 59-62 HRc with case depth (to 50HRc) of 0,076 -1,02 [.030 -.040]. Dimensions apply after heat treat.

(2) Mating part to have critical dimensions as shown. Oil holes must be provided and open for proper oil circulation.

(3) Seal to be furnished with motor for proper oil circulation thru splines.

(4) Some means of maintaining clearance between shaft and mounting flange must be provided.

(5) Counterbore designed to adapt a standard sleeve bearing 35,010 -35,040 [1.3784 -1.3795] I.D. by 44,040 -44,070 [1.7339 -1.7350] O.D. (Oilite Bronze Sleeve Bearing AAM3544-22).

Bearingless

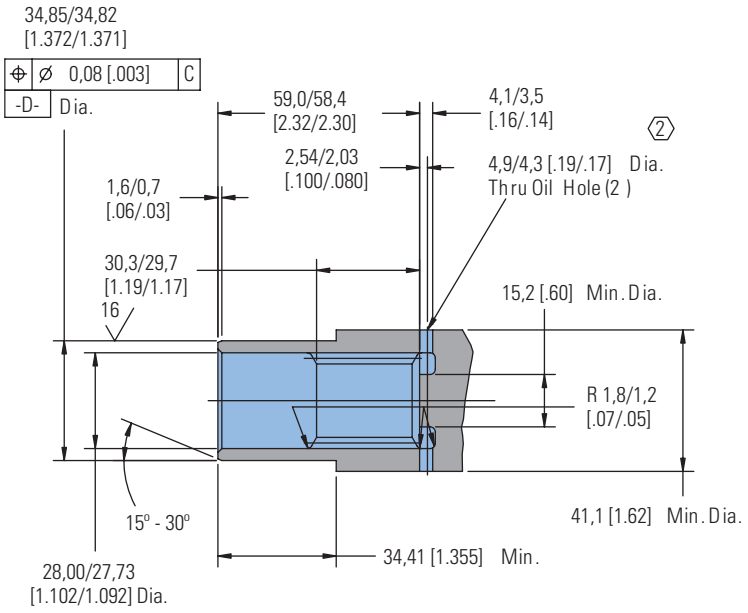

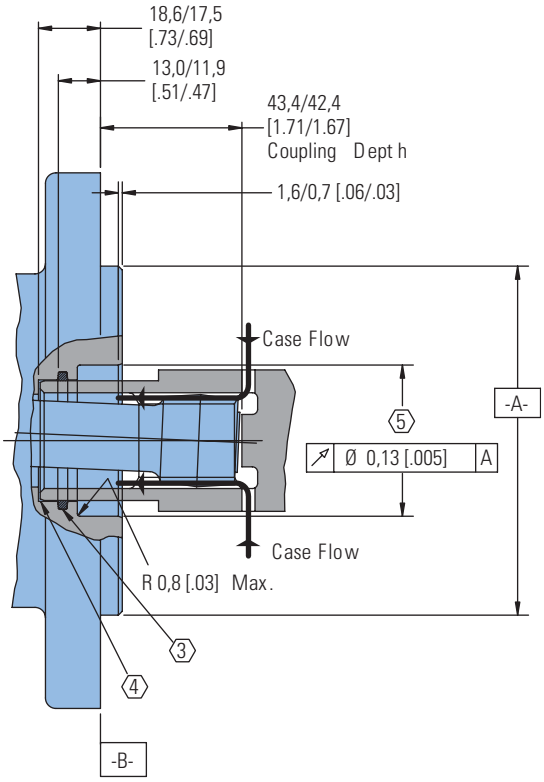

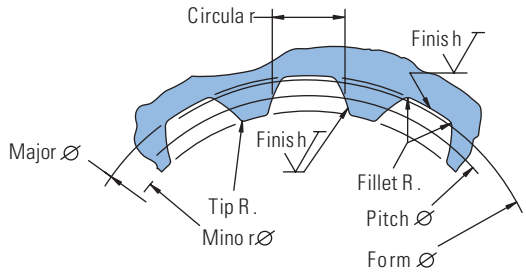

Spline Pitch	12/24
Pressure Angle	30°
Number of teeth	12
Class of Fit	Ref. 5
Type of Fit	Side
Pitch Diameter	Ref. 25,400000 [1.0000000]
Base Diameter	Ref. 21,997045 [.8660254] ◎ 0,21 [.008] D
Major Diameter	(27,74 [1.092] Max. 27,59 [1.086] Min.)
Minor Diameter	23,097 - 23,224 [.9093 - .9143]
Form Diameter, Min.	29,93 [1.060]
Fillet Radius	0,64 - 0,76 [.025 - .030]
Tip Radius	0,25 - 0,38 [.010 - .015]
Finish	1,6 (63)
Involute Profile Variation	+0,000 -0,025 [+.0000 -.0010]
Total Index Variation	0,038 [.0015]
Lead Variation	0,013 [.0005]
Circular Space Width:	
Maximum Actual	4,318 [.1700]
Minimum Effective	4,216 [.1660]
Maximum Effective	Ref. 4,270 [.1681]
Minimum Actual	Ref. 4,247 [.1672]
Dimension Between Two Pins	Ref. 19,020 - 19,190 [.7488 - .7555]
Pin Diameter	4,496 [.1770] Pins to Have 3,38 [.133] Wide Flat for Root Clearance

C-1

Dimensions

Mounting Options

Mounting Code : AC
SAE A — Two Bolt (Standard Motor)

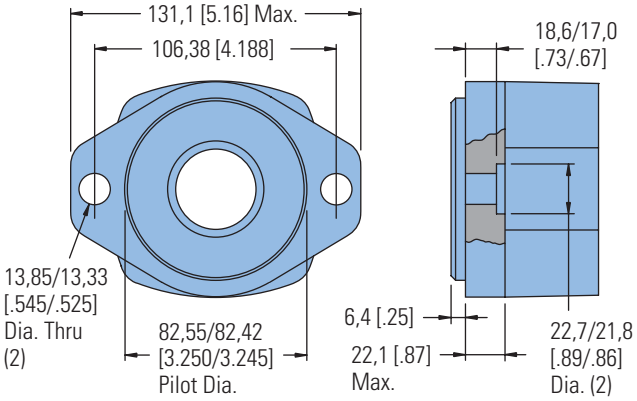

Mounting Code: AF
SAE B — Two Bolt

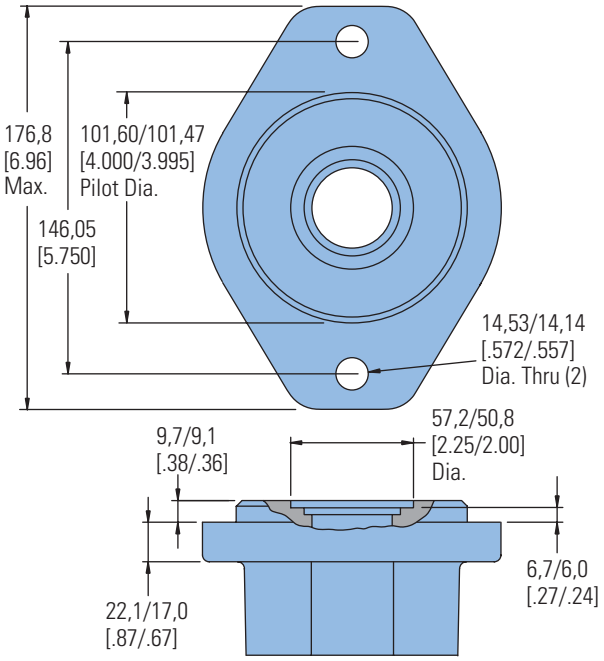

Mounting Code: BY
Four Bolt (Standard Motor)

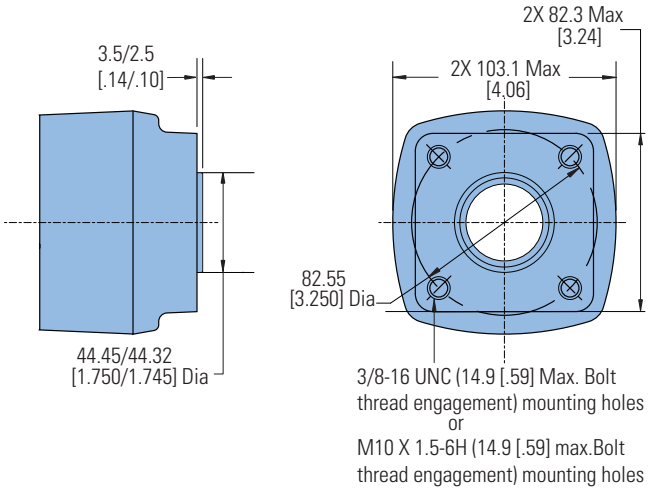

Mounting Code : AH
Four Bolt

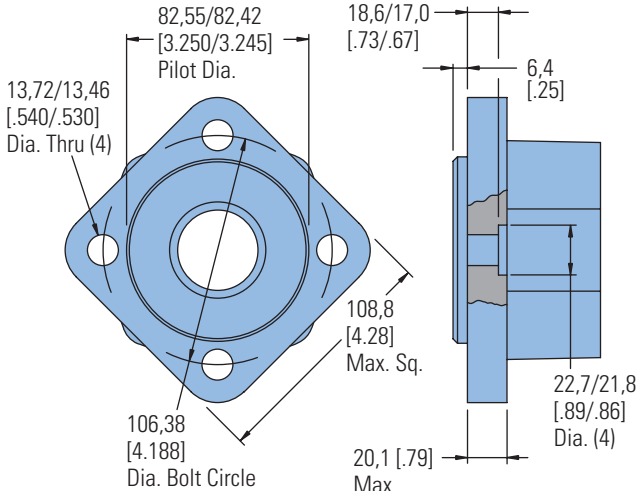

Mounting Code : AJ
Four Bolt Magneto

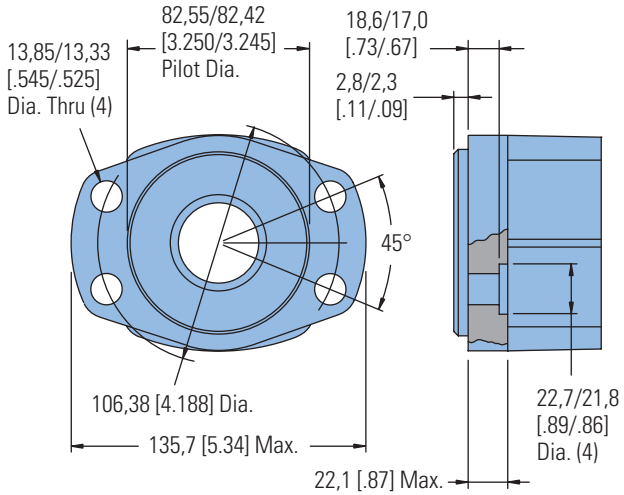

Mounting Code : AB
Four Bolt (Wheel Motor)

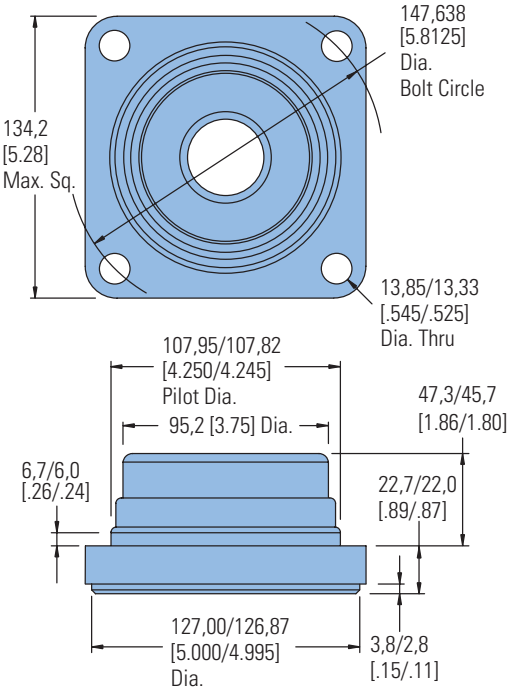

Shaft Code: 01
1 Inch Straight

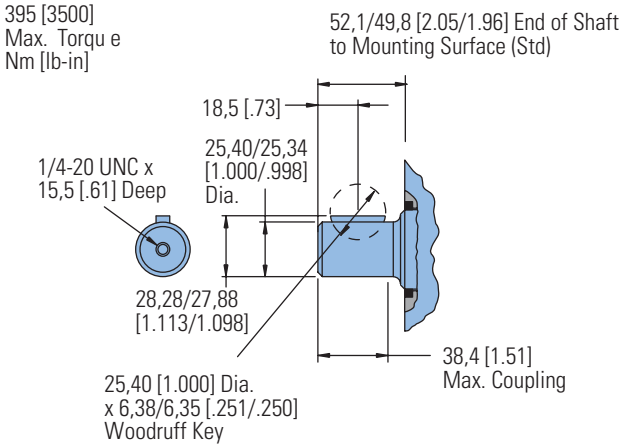

Shaft Code: 03
1 1/4 Inch Tapered

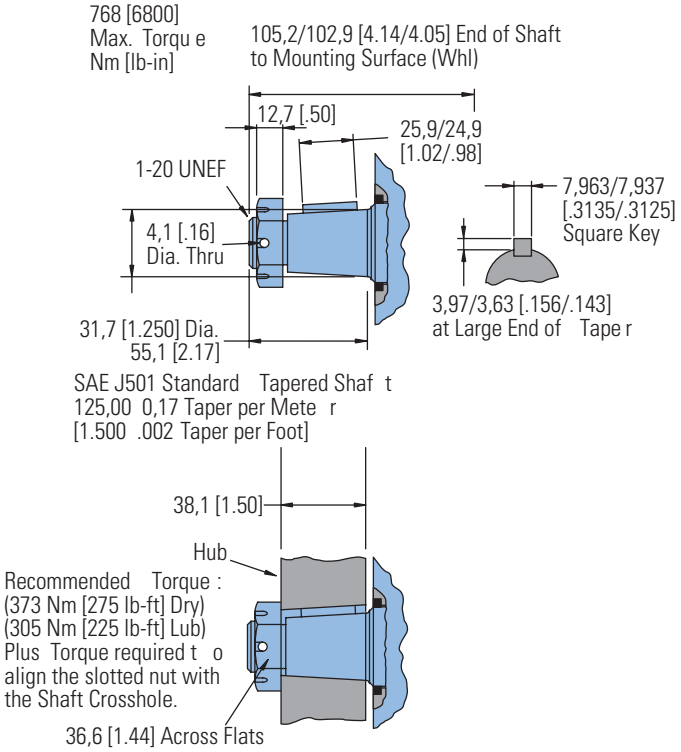

Shaft Code: 02
1 1/4 Inch Straight

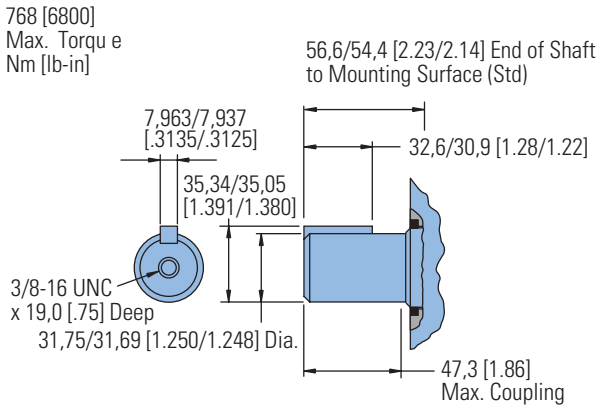

Shaft Code: 19
25 mm Straight

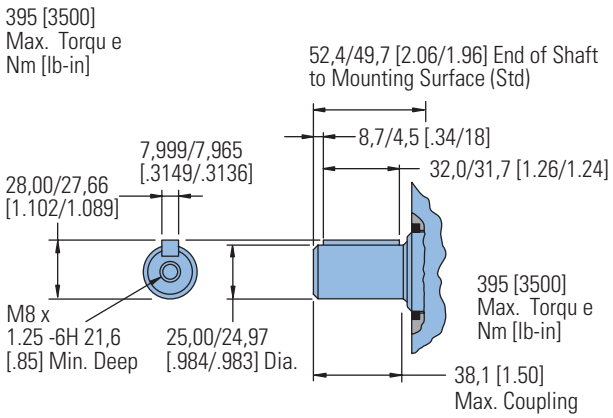

C-1

Shaft Code: 16
32 mm Straight

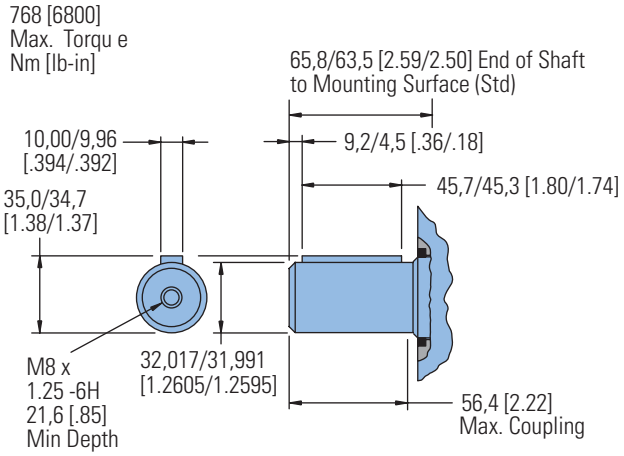

Shaft Code: 05
SAE 6B Splined

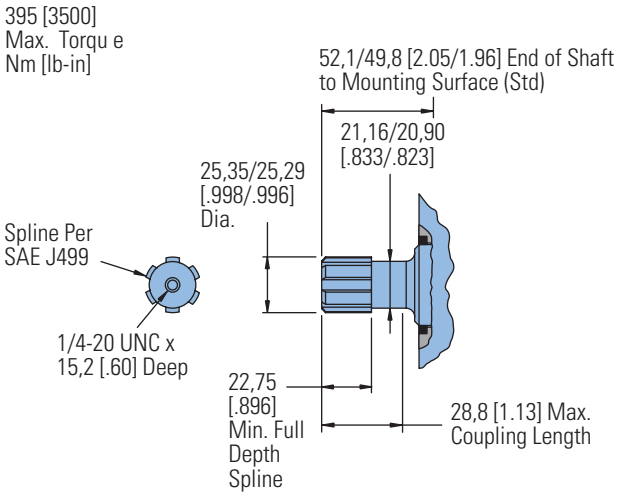

Shaft Code: 04
1 1/4 -14 Tooth Splined

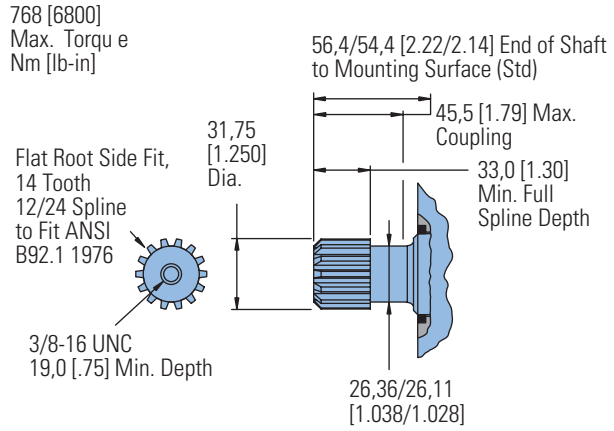

Shaft Code: 07
13 Tooth Splined

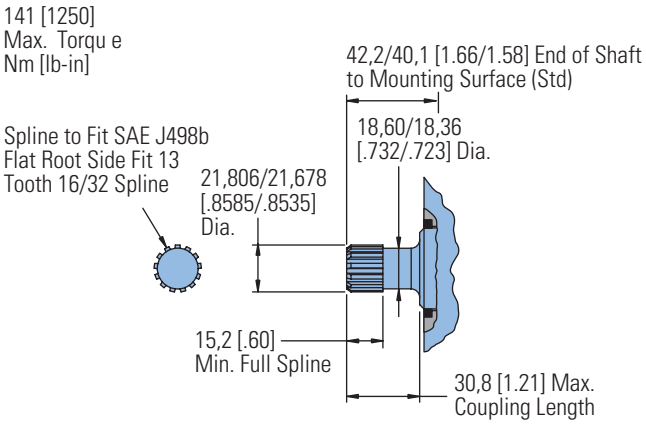

2000 Series

Shaft Side Load Capacity

These curves indicate the radial load capacity on the motor shaft at various locations with an allowable external thrust load of 454 kg [1000 lb].

Note:

Case pressure will increase the allowable inward thrust load and decrease the allowable outward thrust load. Case pressure will push outward on the shaft at 61 kg/7 Bar [135 lb/100 PSI].

Each curve is based on B 10 bearing life (2000 hours of 12,000,000 shaft revolutions at 100 RPM) at rated output torque.

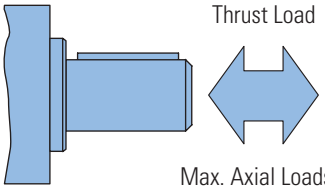

To determine radial load at speeds other than 100 RPM, multiply the load values given on the bearing curve by the factors in the chart below.

RPM	Multiplication Factor
50	1.23
100	1.00
200	0.81
300	0.72
400	0.66
500	0.62
600	0.58
700	0.56
800	0.54

For 3,000,000 shaft revolutions or 500 hours–Increase these shaft loads 52%.

Standard Motor
Straight and Splined Shafts

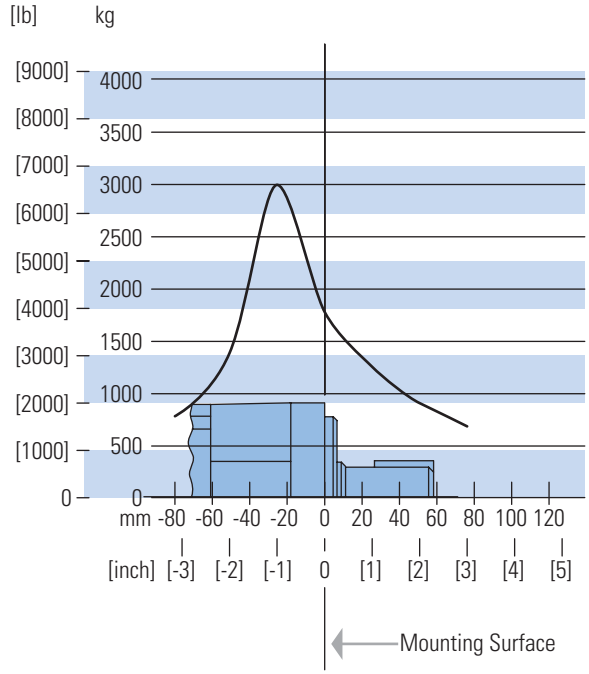

Wheel Motor
Tapered Shaft

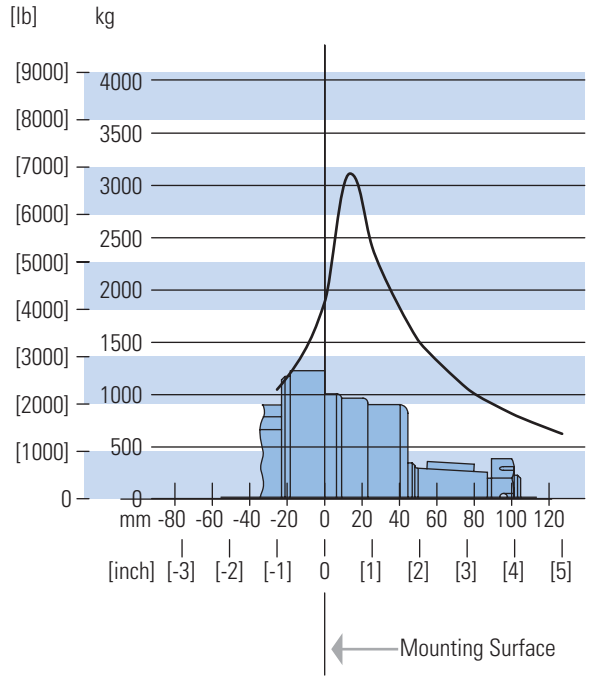

C-1

2000 Series

Case Pressure and Case Porting

Char-Lynn 2000 Series motors are durable and have long life as long as the recommended case pressure is not exceeded. Allowable case pressure is highest at low shaft speeds. Consequently, motor life will be shortened if case pressure exceeds these ratings (acceptability may vary with application). Determine if an external case drain is required from the case pressure seal limitation chart.

Case Pressure Seal Limitation

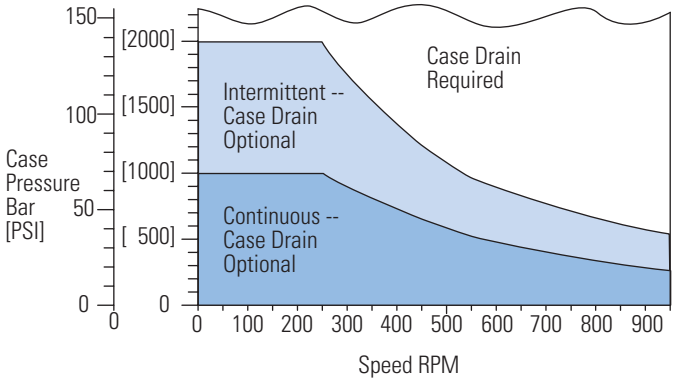

Case Porting Advantage

Contamination Control — flushing the motor case.

Cooler Motor — exiting oil draws motor heat away.

Extend Motor Seal Life — maintain low case pressure with a preset restriction in the case drain line.

Port Code: AA
Port Code: AG
7/8-14 UNF-2B SAE O-ring Ports (2) or G 1/2 (BSP) Ports (2)

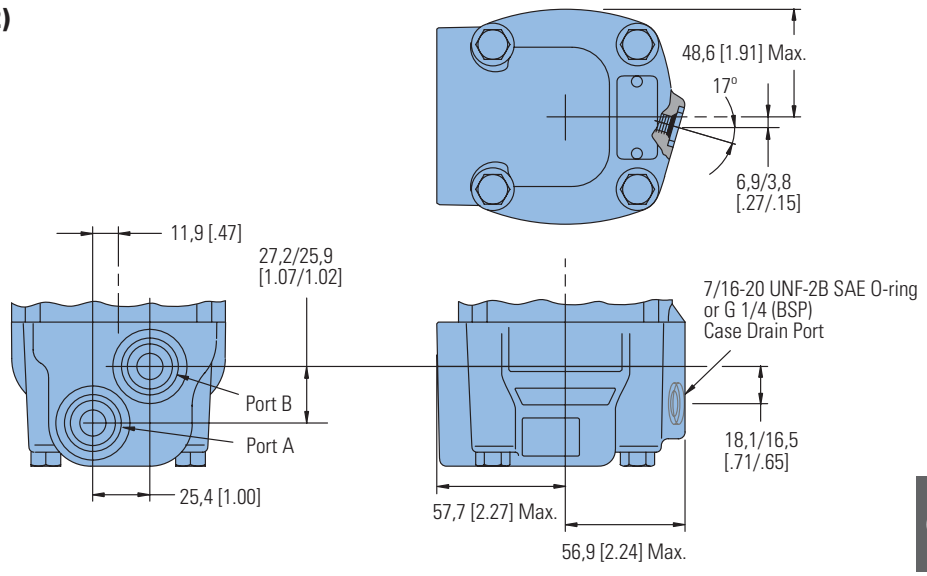

Case Flow Code: 23

7/8-14 UNF-2B SAE O-ring Ports (2) with Top Ported Case Drain

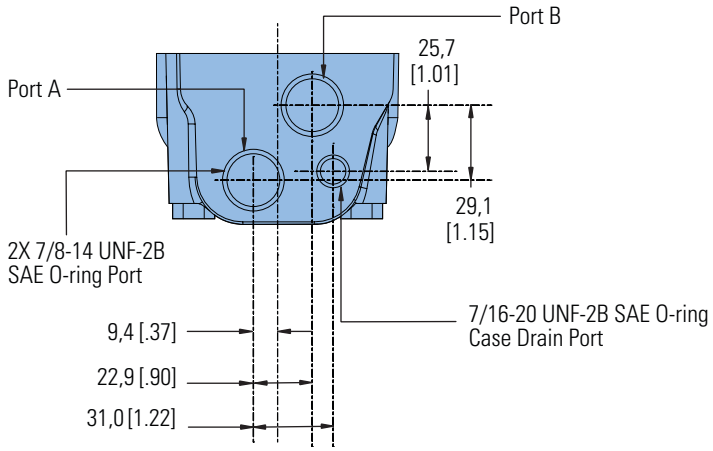

Port Code: AB
Port Code: AE
Manifold Mount

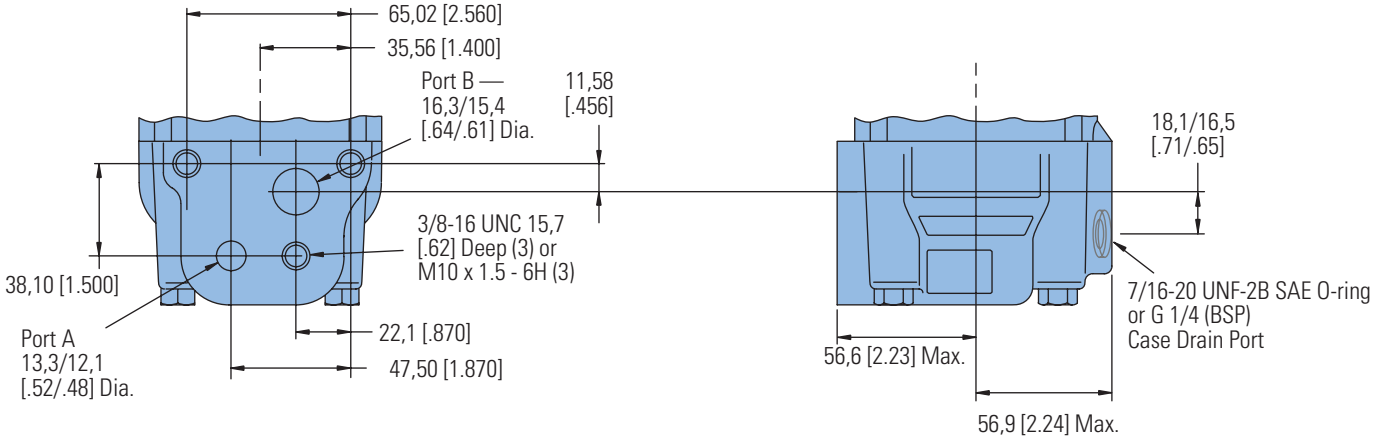

C-1

Port Code: AF

1-1/16-12 UN-2B SAE O-ring Ports (2) Positioned 180° Apart

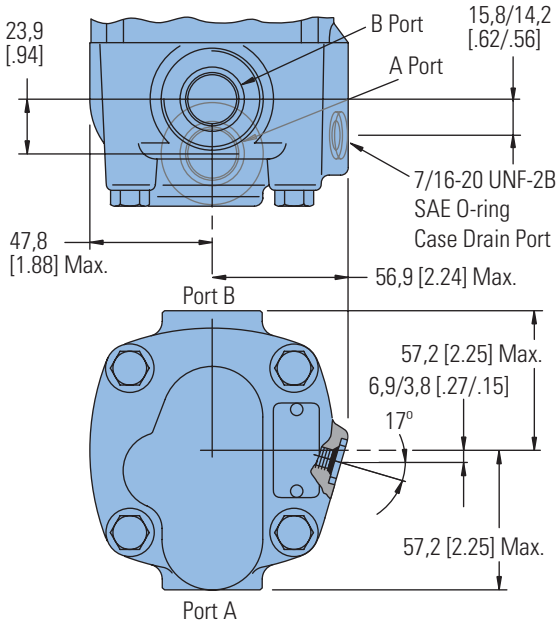

Port Code: AD

7/8-14 UNF-2B SAE O-ring End Ports (2)

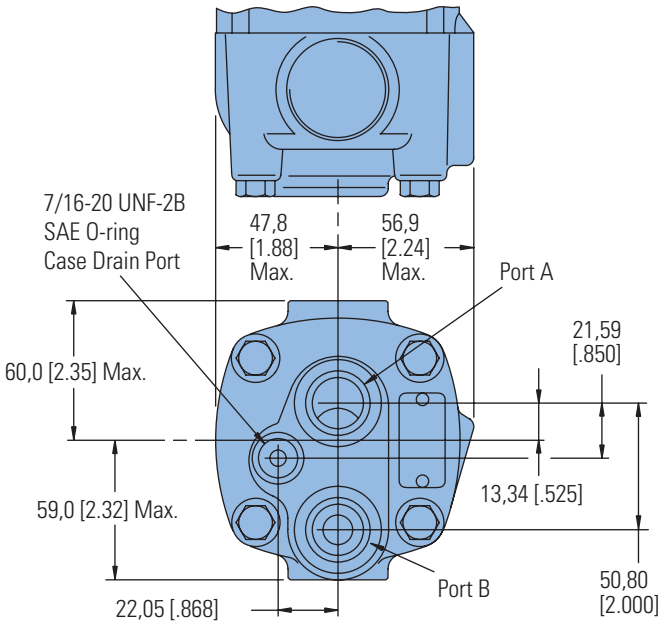

Port Code: AA
Port Code: AG
7/8 -14 UNF-2B SAE O-ring Ports (2) or G 1/2 (BSP) Ports (2)

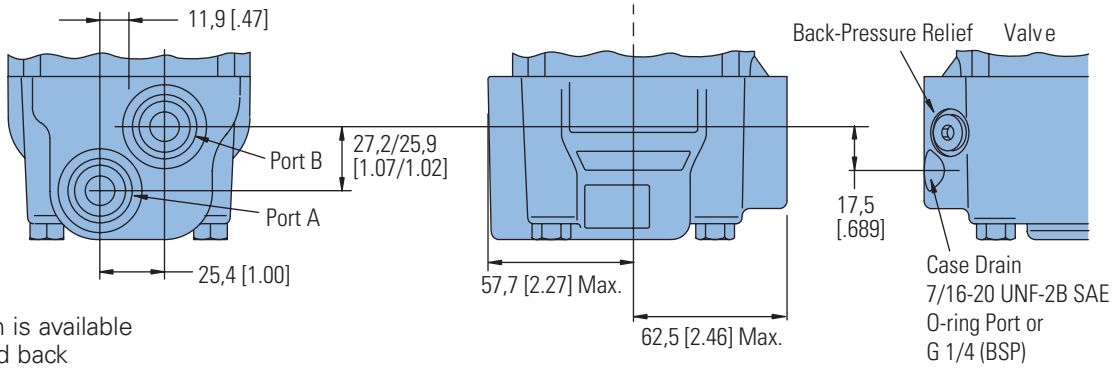

This port option is available with shuttle and back pressure relief valve for closed loop applications.

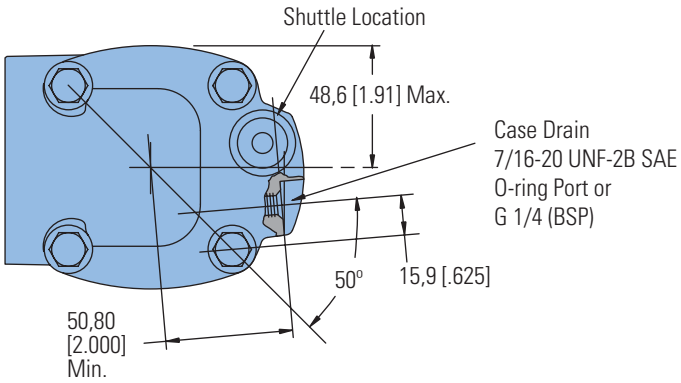

Port Code: AD
7/8 -14 UNF-2B SAE O-ring End Ports (2)

This port option is available with shuttle and back pressure relief valve for closed loop applications.

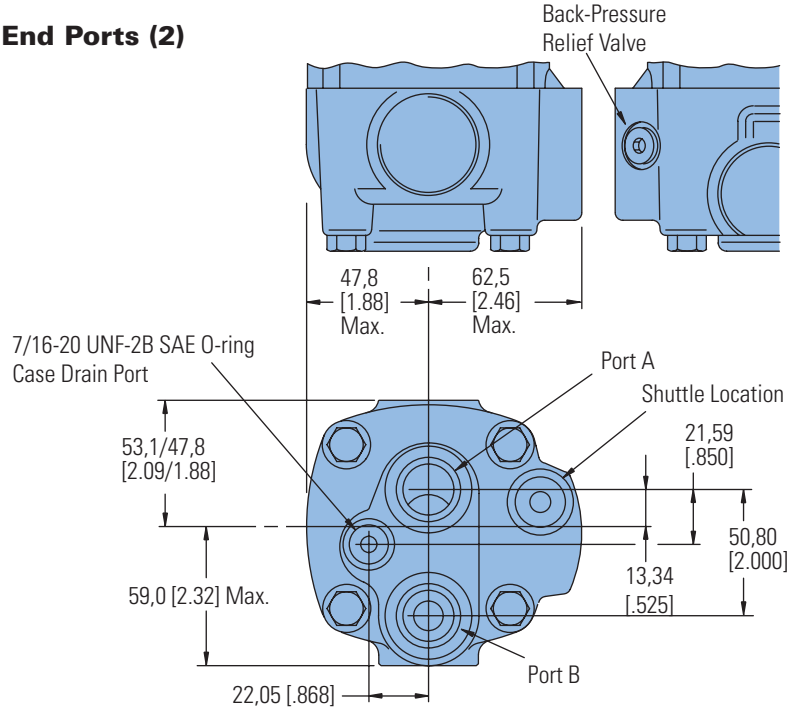

2000 Series

Product Numbers

Note:

For 2000 Series Motors with a configuration **Not Shown** in the charts below: Use model code number system on the next page to specify product in detail.

Use digit prefix — 104-, 105-, or 106- plus four digit number from charts for complete product number— Example 106-1043.

Orders will not be accepted without three digit prefix.

MOUNTING	SHAFT	PORT SIZE	DISPL. cm^3/ r [in^3/ r]/ PRODUCT NUMBER										
			41* [2.5]	80 [4.9]	90 [5.5]	100 [6.2]	130 [8.0]	160 [9.6]	195 [11.9]	245 [14.9]	305 [18.7]	395 [24.0]	490 [29.8]
2 Bolt SAE A Flange	1 Inch Straight	7/8 -14 O-ringStaggered	104-4708	-1001	—	-1002	-1003	-1004	-1005	-1006	-1007	-1143	—
		1 1/16 -12 O-ring 180° Apart	104-——	-1037	—	-1038	-1039	-1040	-1041	-1042	-1043	-1044	—
	1 1/4 Inch Straight	7/8 -14 O-ring Staggered	104-4774	-1022	—	-1023	-1024	-1025	-1026	-1027	-1028	-1228	-1420
		1 1/16 -12 O-ring 180° Apart	104-——	-1061	—	-1062	-1063	-1064	-1065	-1066	-1067	-1068	-1421
	1 1/4 Inch - 14 T Splined	7/8 -14 O-ring Staggered	104-4764	-1029	—	-1030	-1031	-1032	-1033	-1034	-1035	-1229	-1422
		1 1/16 -12 O-ring 180° Apart	104-——	-1087	—	-1088	-1089	-1090	-1091	-1092	-1093	-1094	-1423
2 Bolt SAE B Flange	1 1/4 Inch Straight	7/8-14 O-ring Staggered	104-——	-1200	—	-1201	-1202	-1203	-1204	-1205	-1206	-1207	—
	1 1/4 Inch Involute SAE C Splined	7/8 -14 O-ring Staggered	104-——	-1208	—	-1209	-1210	-1211	-1212	-1213	-1214	-1215	—
	1 Inch SAE 6B Splined	7/8 -14 O-ring Staggered	104-——	-1193	—	-1194	-1195	-1196	-1197	-1198	-1199	—	—
	7/8 Inch SAE B Splined	7/8 -14 O-ring Staggered	104-——	-1216	—	-1217	-1218	-1219	-1220	—	—	—	—
Standard with 4 Bolt Flange	32 mm Straight	G 1/2 (BSP))	104-4672	-1384	—	-1385	-1386	-1387	-1388	-1389	-1390	-1391	—
	1 1/4 Inch 14 T Splined	G 1/2 (BSP)	104-——	-1376	—	-1377	-1378	-1379	-1380	-1381	-1382	-1383	—
Wheel Motor	1 1/4 Inch Straight	7/8 -14 O-ring Staggered	105-——	—	—	—	—	—	—	—	—	—	-1148
		1 1/16 -12 O-ring 180° Apart	105-——	—	—	—	—	—	—	—	—	—	-1149
	32 mm Straight	G 1/2 (BSP)	105-——	-1134	—	-1135	-1136	-1137	-1138	-1139	-1140	-1141	—
	1 1/4 Inch Tapered	7/8 -14 O-ring Staggered	105-——	-1001	—	-1002	-1003	-1004	-1005	-1006	-1007	-1060	-1152
		1 1/16 -12 O-ring 180° Apart	105-——	-1071	—	-1072	-1073	-1074	-1075	-1076	-1077	-1078	—
	1 1/4 Inch 14 T Splined	7/8 -14 O-ring Staggered	105-——	-1029	—	-1030	-1031	-1032	-1033	-1034	-1035	-1096	—
		1 1/16 -12 O-ring 180° Apart	105-——	-1079	—	-1080	-1081	-1082	-1083	-1084	-1085	-1086	—
Bearingless		7/8 -14 O-ring Staggered	106-——	-1008	—	-1009	-1010	-1011	-1012	-1013	-1014	-1015	-1047
		G 1/2 (BSP)	106-——	-1038	—	-1039	-1040	-1041	-1042	-1043	-1044	-1045	—

*New Release

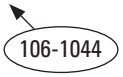

MOUNTING	SHAFT	PORT SIZE	DISPL. cm^3/ r [in^3/ r]/ PRODUCT NUMBER										
			41* [2.5]	80 [4.9]	90 [5.5]	100 [6.2]	130 [8.0]	160 [9.6]	195 [11.9]	245 [14.9]	305 [18.7]	395 [24.0]	490 [29.8]
2 Bolt SAE A Flange	1 Inch Straight	7/8 -14 O-ring Staggered	104-——	-1528	—	-1529	-1530	-1531	-1532	-1533	-1534	-1519	-1535
	1 1/4 Inch Straight	7/8 -14 O-ring	104-——	-1516	—	-1536	-1537	-1538	-1539	-1452	-1479	-1509	-1489

*New Release

2000 Series

Model Code

The following 30-digit coding system has been developed to identify all of the configuration options for the 2000 Series motor. Use this model code to specify a motor with the desired features. All 30 digits of the code must be present when ordering. You may want to photocopy the matrix below to ensure that each number is entered in the correct box.

M	0 2	* * *	* *	* *	* *	* *	*	* *	1	*	* *	0 0	* *	* *	A A	F
1	2 3	4 5 6	7 8	9 10	11 12	13 14	15	16 17	18	19	20 21	22 23	24 25	26 27	28 29	30

1 Product
M – 2000 Series Motor

2, 3 Product Series
02 – 2000 Series Motor

4, 5, 6 Displacement
021 - 34 cm^3/r [2.07 in^3/r]
025 - 40.8 cm^3/r [2.49 in^3/r]
040 - 66.5 cm^3/r [4.06 in^3/r]
049 – 80.6 cm^3/r [4.92 in^3/r]
055 – 90.6 cm^3/r [5.53 in^3/r]
062 – 101.6 cm^3/r [6.20 in^3/r]
080 – 130.6 cm^3/r [7.97 in^3/r]
096 – 158.1 cm^3/r [9.65 in^3/r]
119 – 194.8 cm^3/r [11.89 in^3/r]
149 – 244.3 cm^3/r [14.91 in^3/r]
187 – 306.6 cm^3/r [18.71 in^3/r]
240 – 393.8 cm^3/r [24.03 in^3/r
298 – 489.0 cm^3/r [29.84 in^3/r]

7, 8 Mounting Type
AB – Wheel, 4 Bolt: 108.0 [4.25] Pilot Dia. 13.59 [.535] Dia. Holes on 147.6 [5.81] Dia. Bolt Circle. 127.0 [5.00] Dia. Rear Mount Pilot
AC – Standard, 2 Bolt: 82.6 [3.25] Pilot Dia. 13.59 [.535] Dia. Holes on 106.4 [4.19] Dia. Bolt Circle. SAE A
AD – Bearingless (w/ Leakage Slots), 4 Bolt: 101.6 [4.00] Pilot Dia. 13.59 [.535] Dia. Holes on 127.0 [5.00] Dia. Bolt Circle
AF – Standard, 2 Bolt: 101.6 [4.00] Pilot Dia. 14.35 [.565] Dia. Holes on 146.0 [5.75] Dia. Bolt Circle. SAE B
AH – Standard, 4 Bolt: 82.6 [3.25] Pilot Dia. 13.59 [.535] Dia. Holes on 106.4 [4.19] Dia. Bolt Circle
AJ – Standard (Magneto), 4 Bolt: 82.6 [3.25] Pilot Dia. 13.59 [.535] Dia. Holes on 106.4 [4.19] Dia. Bolt Circle. 2.79 [.110] Pilot Length
AL - Wheel (European), 4 Bolt: 125 [4.92] Pilot Dia. 13.79 [.543] Dia. Holes on 159.99 [6.299] Dia. Bolt Circle
AP – Wheel, 4 Bolt: 108.0 [4.25] Pilot Dia. 13.59 [.535] Dia. Holes on 147.6 [5.81] Dia. Bolt Circle. 127.0 [5.00] Dia. Rear Mount Pilot. Spigot Reduced to 88.9 [3.50] Dia. by 25.4 [1.00] Depth.

9, 10 Output Shaft
00 – None (Bearingless)
01 – 25.40 [1.000] Dia. Straight Shaft with 1/4-20UNC-2B Thread in End, 6.35 [.250] Wide x 25.40 [1.000] Dia. Woodruff Key
02 – 31.75 [1.250] Dia. Straight Shaft with .375-16UNC-2B Thread in End, 7.938 [.3125] Sq x 31.75 [1.250] Straight Key
03 – 31.75 [1.250] Dia. .125:1 Tapered Shaft per SAE J501 with/1.000-20 UNEF-2A Threaded Shaft End and Slotted Hex Nut, 7.938 [.3125] Sq x 25.40 [1.0] Straight Key
04 – 31.75 [1.250] Dia. Flat Root Side Fit, 14 Tooth, 12/24 DP 30° Involute Spline w/ .375-16UNC-2B Thread in End, 33.0 [1.30] Min. Full Spline Length
05 – 25.40 [1.000] Dia. 6B Spline per SAE J499 with .250-20UNC-2B Thread in End, 22.76 [.896] Min. Full Spline Length
07 – 22.22 [.875] Dia. Flat Root Side Fit, 13 Tooth, 16/32 DP 30° SAE B Involute Spline, 15.2 [.60] Min. Full Spline Length
16 – 32.00 [1.260] Dia. Straight Shaft with M8 x 1.25-6H Thread in End, 9.982 [.3930] W x 7.995 [.3132] H x 45.00 [1.772] L Key
17 – 31.75 [1.250] Dia. Straight Shaft With 3/8 -16 UNC-2B Thread in End, 7.938 [.3125] Sq x 31.75 [1.250] Straight Key, Corrosion Resistant (Seal area to shaft end)
19 – 25.00 [.984] Dia. Straight Shaft with M8 x 1.25-6h Thread in End, 7.982 [.3142]W x 6.954 [.2738]H x 31.82 [1.254]L Key
41 – 35.00 [1.378] Dia. 10:1 Tapered Shaft Per ISO R775 with M20 x 1.5-6g Threaded Shaft End and Slotted Hex Nut, 6.00 [.236] Sq. X 20.00 [.787] Key
42 – 35.00 [1.378] Dia. Straight Shaft with M8 x 1.25-6h Thread in End, 9.982 [.3930]W x 7.995 [.3132]H x 45.00 [1.772]L Key

11, 12 Ports
AA – .875-14 UNF-2B SAE O-ring Ports - Staggered Ports
AB –12.70 [.500] and 15.88 [.625] Dia. Manifold Ports with 3 x .375-16 UNC-2B Port Block Mounting Holes
AC –.875-14 UNF-2B SAE O-ring Ports - Ports Oriented 180° to each other
AE – 12.70 [.500] And 15.88 [.625] Dia. Manifold Ports with 3 x M10 x 1.5-6H Port Block Mounting Holes
AF – 1.0625-12 UN-2B SAE O-ring Ports - Ports Oriented 180° to each other
AG – G-1/2 BSP Straight THD Ports - Staggered Ports
AN – G-1/2 BSP Straight THD Ports - End Ported
AS – G-1/2 Bsp Straight THD Ports - Staggered Port with 2 x M10 x 1.5-6H Port Block Mounting Holes - European

13, 14 Case Flow Options
Shuttles available with port code AA only)
01 – .4375-20 UNF-2B SAE O-Ring Port
02 – G 1/4 BSP Straight THD Port
09 – Reverse Flow Shuttle Valve w/ G-1/4 BSP Straight THD Port, .062 Dia. Shuttle Flow Orifice
13 – Reverse Flow Shuttle Valve w/ .4375-20 UNF-2B SAE O-Ring Port, .062 Dia. Shuttle Flow Orifice

15 Low Pressure Relief
0 – None
A – Set at 4.5 bar [65 lbf/in^2]
B – Set at 15.2 bar [220 lbf/in^2]
C – Set at 20.7 bar [300 lbf/in^2]
E – Set at 11.03 bar [160 lbf/in^2]

16, 17 Pressure/Flow Option
00 – None
Integral Cross-Over Relief Valve:
30 – Set at 103.4 bar [1500 lbf/in^2]
31 – Set at 120.6 bar [1750 lbf/in^2]
32 – Set at 137.9 bar [2000 lbf/in^2]
33 – Set at 155.1 bar [2250 lbf/in^2]
34 – Set at 172.4 bar [2500 lbf/in^2]
35 – Set at 189.6 bar [2750 lbf/in^2]
36 – Set at 206.8 bar [3000 lbf/in^2]
51 – Set at 234.4 bar [3400 lbf/in^2]

18 Geroler Option
1 – Standard
2 – Free Running
6 – Reduced side clearance, no warranty for galling

19 Seal Options
0 – Standard
1 - Viton
2 - Viton Shaft Seal
3 - High Pressure Shaft Seal
4 - Seal Guard
5 - Extreme Duty Seal Guard
6 - High Pressure Shaft Seal, Seal Guard

20, 21 Accessories
00 – None
AA - Long Body Digital Speed Pickup (30 Pulse) 127 [5.0] Lead Wire With Packard Weather Pac Shroud Connector (A=Power, B=Signal, C=Common)
AD – M 12 Threaded Connector, Digital Speed Pickup (30 Pulse)
AG - M 12 Threaded Connector, Digital Speed And Direction Pickup (One 60 Pulse Per Rev Speed Signal And One Directional Signal (Pin 1=Power, Pin 2=Direction, Pin 3=Common, Pin 4=Speed)

22, 23 Special Features (Hardware)
00 – None

24, 25 Special Features (Assembly)
00 – None
AA – Flange rotated 90 degrees
AB – Reverse Rotation
AE - Flange Rotated 45 Degrees

26, 27 Paint/Packaging
AA – No Paint, Indiv. Box
AB – Low Gloss Black Primer, Indiv. Box
AT – Environmental coated black, individual box
BJ – Nickel plated motor (excluding shaft), individual box

28, 29 Customer ID
AA – None

30 Design Code
F – Sixth

Feature in bold are preferred and allow for shorter lead time

C-1

2000 Series Two-Speed

Description

The Eaton 2000 Series motors are available with an integral two speed feature that changes the displacement in a ratio of 1 to 2 and shifts the motor from a low speed high torque (LSHT) mode to a high speed low torque (HSLT) mode. The open center selector valve shifts the speed mode from low to high speed when pilot pressure of 6.9 Δ Bar [100 Δ PSI] minimum is applied to the pilot port (6.9 Bar [100 PSI] higher than case pressure). In the high speed mode torque values are approximately one half with twice the speed of the conventional 2000 Series single speed motors.

An external two position three way valve is required for shifting the pilot pressure port between signal pressure (HSLT) and low pressure (LSHT)

Two speed motors are available with a return line closed center shuttle for closed circuit applications. Low speed high torque mode is the normal position of the speed selector valve. When a differential pressure is supplied to the pilot port and 6,9 Bar [100 PSI] is reached, the selector valve overcomes the return spring force and the spool shifts to the high speed mode. The oil in the opposite side of the spool is drained internally. Pressure between the pilot supply and case drain or return line (depending on open or closed circuit system) must be maintained to keep the motor in the high speed mode.

When pilot pressure is removed from the pilot port the pressure in the pilot end of the spool valve is relieved and drained back through this three way valve, the spring force returns the spool valve to LSHT position. Pilot pressure may come from any source that will provide uninterrupted pressure during the high speed mode operation. Pilot pressure 6,9 Δ Bar [100 Δ PSI] minimum, up to the full operating pressure of the motor.

In normal LSHT operation the Char-Lynn two speed motor will function with equal shaft output in either direction (CW or CCW), the same as the single speed Char-Lynn disc valve motors.

However, to prevent cavitation in the HSLT mode, the preferred direction of shaft rotation is counter clockwise (port B pressurized). This unique disc valve is not symmetrical in porting the fluid for the HSLT mode. Consequently, when the pressure is reversed for HSLT CW rotation, cavitation can occur. Installing a restriction (200 psi or more depending on flow) in the hydraulic line that connects port B will prevent cavitation.

If you are operating in a critical area and a restriction in the hydraulic line causes concern, these two speed motors can be ordered timed with CW preferred HSLT shaft rotation. Hence, with this option port B will have to be pressurized for

CW preferred HSLT shaft rotation. The restriction recommended for the line connecting port B remains unchanged.

Finally in closed circuit applications a hydraulic line restriction is not required. Instead, the charge pump can be used to supply and maintain a minimum pressure of 14 Bar [200 PSI].

Performance Data

In the high speed mode torque values are approximately one half with twice the speed of the conventional 2000 Series single speed motors.

In the low speed mode torque and speed values are the same as the conventional 2000 Series motors.

Note:

Low displacement (4.9 to 8.0 CID) motors have limited starting torque when started in high speed mode.

Be certain in closed loop applications that the charge pump when used for back pressure on the B port, has sufficient displacement to maintain charge pressure especially in dynamic braking or overrunning load conditions.

Important!

Due to potential problems in maintaining charge pump pressure at port B for uninterrupted back pressure during dynamic braking, Eaton does not recommend the two speed motor where overrunning conditions may exist.

2000 Series Two-Speed

Typical Hydraulic Circuit

Note:

This is the low speed biased motor circuit. For the high speed biased motor motor circuit please contact your Eaton Hydraulics representative.

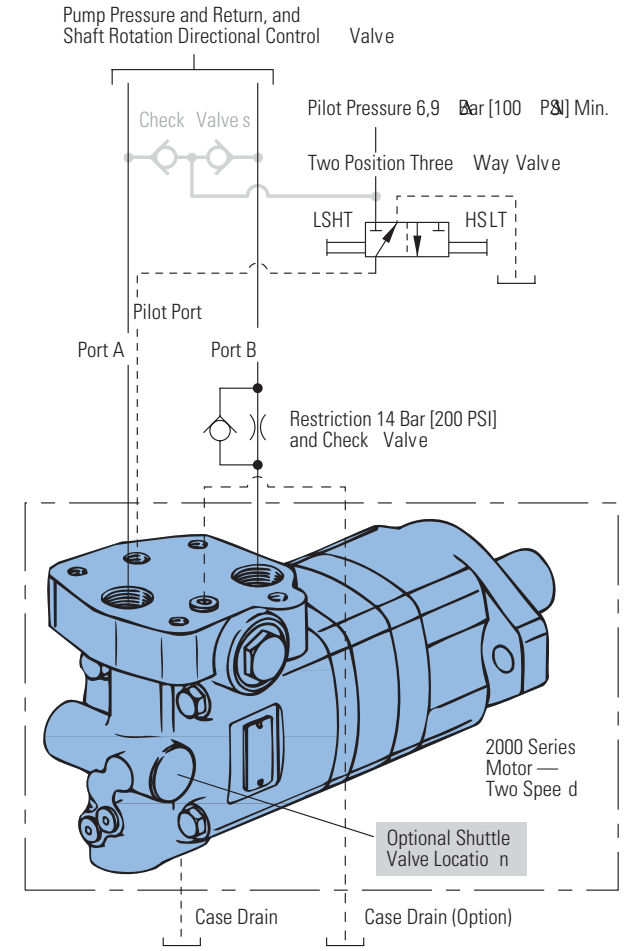

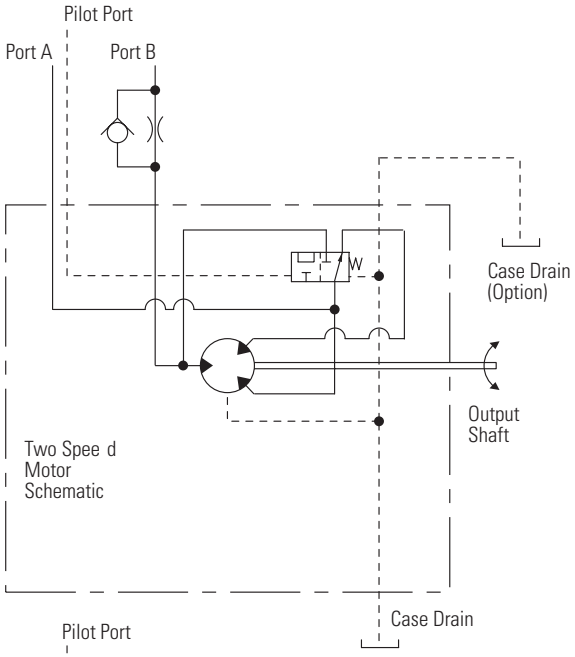

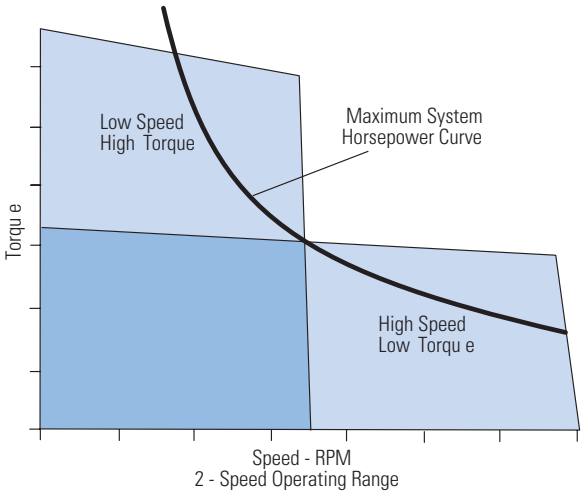

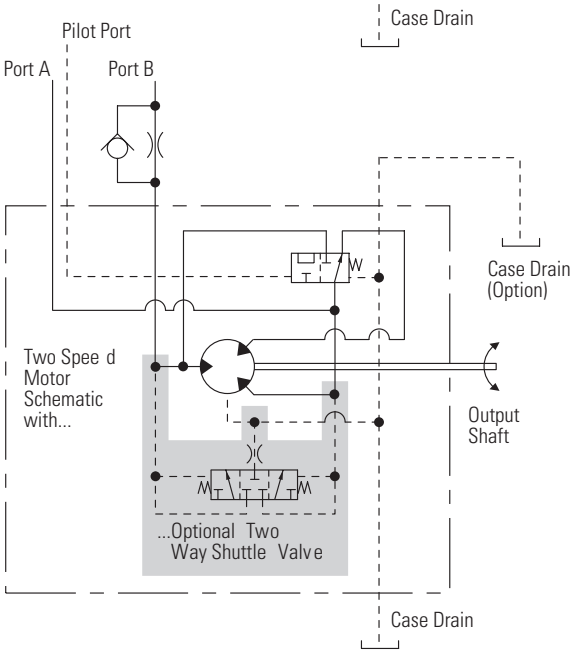

C-1

2000 Series Two-Speed

Specifications

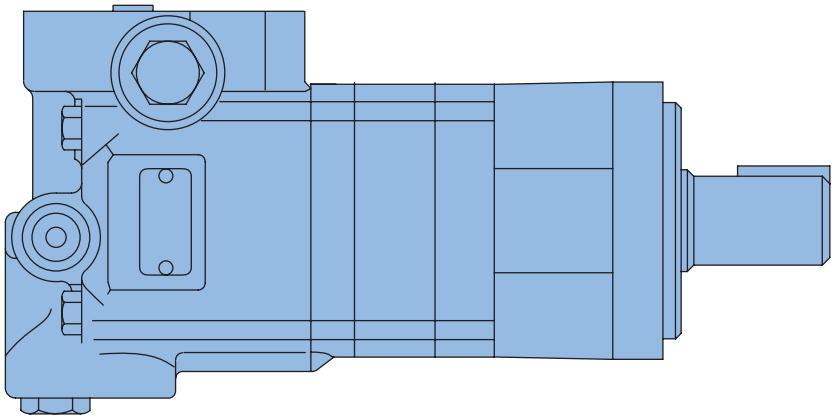

SPECIFICATION DATA — 2000 SERIES TWO-SPEED MOTORS

Displ. cm^3/r [in^3/r]	High Speed Mode	40 [2.45]	50 [3.1]	65 [4.0]	80 [4.8]	95 [5.95]	120 [7.45]	155 [9.35]	195 [12.0]	245 [14.9]
	Low Speed Mode	80 [4.9]	100 [6.2]	130 [8.0]	160 [9.6]	195 [11.9]	245 [14.9]	305 [18.7]	395 [24.0]	490 [29.8]
Max. Speed (RPM) @ Continuous Flow	High Speed Mode	1000	1000	990	860	700	560	450	350	230
	Low Speed Mode	500	500	495	430	350	280	225	175	115
Flow l/min [GPM]	High Speed Mode	45 [12]	55 [15]	70 [19]	75 [20]	75 [20]	75 [20]	75 [20]	75 [20]	75 [20]
	Low Speed Mode	45 [12]	55 [15]	70 [19]	75 [20]	75 [20]	75 [20]	75 [20]	75 [20]	75 [20]
Torque*	High Speed Mode									
Nm	Continuous	100 [880]	125 [1115]	165 [1450]	195 [1725]	240 [2150]	300 [2675]	380 [3350]	365 [3225]	448 [3970]
[lb-in]	Intermittent	145 [1300]	185 [1660]	240 [2150]	240 [2150]	300 [2650]	375 [3330]	440 [3900]	445 [3940]	486 [4300]
Torque*	Low Speed Mode									
Nm	Continuous	235 [2065]	295 [2630]	385 [3420]	455 [4040]	540 [4780]	660 [5850]	765 [6750]	775 [6840]	845 [7470]
[lb-in]	Intermittent	345 [3035]	445 [3950]	560 [4970]	570 [5040]	665 [5890]	820 [7250]	885 [7820]	925 [8170]	930 [8225]
Pressure	Continuous	205 [3000]	205 [3000]	205 [3000]	205 [3000]	205 [3000]	205 [3000]	205 [3000]	155 [2250]	120 [1750]
Δ bar [Δ PSI]	Intermittent	310 [4500]	310 [4500]	310 [4500]	260 [3750]	260 [3750]	260 [3750]	240 [3500]	190 [2750]	140 [2000]
Weight kg [lb]	Standard or Wheel Mount	13,8 [30.5]	14,1 [31.0]	14,3 [31.5]	14,5 [32.0]	15,0 [33.0]	15,4 [34.0]	15,9 [35.0]	16,3 [36.0]	16,8 [37.0]
	Bearingless	11.8 [26.0]	12,0 [26.5]	12,2 [27.0]	12,5 [27.5]	12.9 [28.5]	13,4 [29.5]	13,8 [30.5]	14,3 [31.5]	14,7 [32.5]

Maximum Case Pressure: See case pressure seal limitation graph.

*See shaft torque ratings for limitations.

Note:

To assure best motor life, run motor for approximately one hour at 30% of rated pressure before application to full load. Be sure motor is filled with fluid prior to any load applications.

High Speed Mode

(Reduced Motor Displacement)

Low Speed Mode

(Full Motor Displacement)

Maximum Inlet Pressure:

310 bar [4500 PSI]

Do not exceed Δ pressure rating (see chart above).

Maximum Return Pressure:

310 bar [4500 PSI] with case drain line installed.

Do not exceed Δ pressure rating (see chart above).

Δ bar [Δ PSI] :

The true pressure difference between inlet port and outlet port

Continuous Rating:

Motor may be run continuously at these ratings

Intermittent Operation:

10% of every minute

Peak Operation:

1% of every minute

Recommended Fluids:

Premium quality, anti-wear type hydraulic oil with a viscosity of not less than 70 SUS at operating temperature.

Recommended System Operating Temp.:

-34°C to 82°C [-30°F to 180°F]

Recommended Filtration:

per ISO Cleanliness Code, 4406: 20/18/13

2000 Series Two-Speed

Dimensions

Standard and Wheel

Ports

7/8 -14 UNF-2B SAE O-ring Staggered Ports (2)
9/16 -18 UNF-2B SAE O-ring Case Drain Port (1)
7/16 -20 UNF-2B SAE O-ring Pilot Control Port (1) or

G 1/2 (BSP) Staggered Ports (2)
G 1/4 (BSP) Case Drain Port (1)
G 1/4 (BSP) Pilot Control Port (1)

Standard Rotation Viewed from Shaft End

Port A Pressurized — CW
Port B Pressurized — CCW

Two-Speed Standard Motors

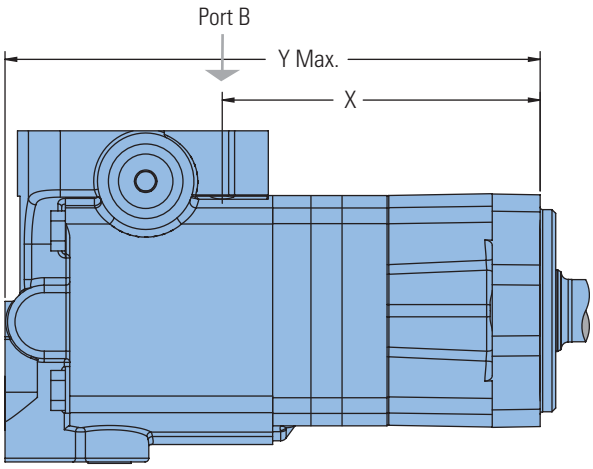

STANDARD MOUNT MOTOR DIMENSIONS

Displacement cm^3/r [in^3/r]	X mm [inch]	Y mm [inch]
80 [4.9]	137,4 [5.41]	231,6 [9.12]
100 [6.2]	142,0 [5.59]	236,5 [9.31]
130 [8.0]	148,5 [5.85]	242,9 [9.56]
160 [9.6]	148,5 [5.85]	242,9 [9.56]
195 [11.9]	155,2 [6.11]	249,4 [9.82]
245 [14.9]	164,2 [6.47]	258,6 [10.18]
305 [18.7]	175,7 [6.92]	270,1 [10.63]
395 [24.0]	191,5 [7.54]	286,1 [11.26]
490 [29.8]	209,0 [8.23]	303,3 [11.94]

C-1

Two-Speed Wheel Motors

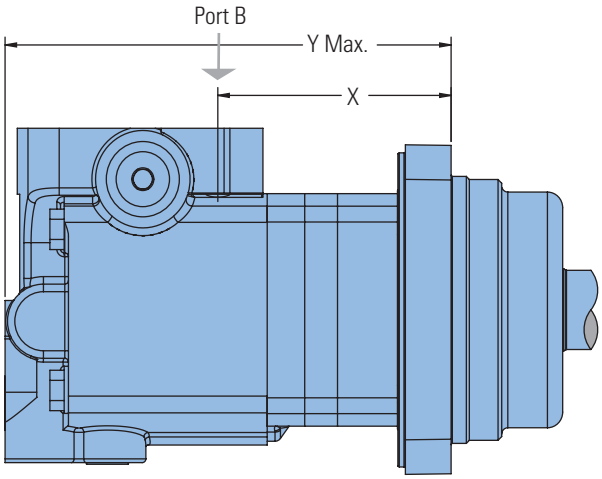

WHEEL MOUNT MOTOR DIMENSIONS

Displacement cm^3/r [in^3/r]	X mm [inch]	Y mm [inch]
80 [4.9]	97,2 [3.83]	191,5 [7.54]
100 [6.2]	101,8 [4.01]	196,4 [7.73]
130 [8.0]	108,3 [4.27]	202,7 [7.98]
160 [9.6]	108,3 [4.27]	202,7 [7.98]
195 [11.9	115,0 [4.53]	209,3 [8.24]
245 [14.9]	124,2 [4.89]	218,5 [8.60]
305 [18.7]	135,5 [5.34]	229,9 [9.05]
395 [24.0]	151,4 [5.96]	245,9 [9.68]
490 [29.8]	168,9 [6.65]	263,1 [10.36]

2000 Series Two-Speed

Dimensions

Bearingless

Ports

7/8 -14 UNF-2B SAE O-ring Staggered Ports (2)
9/16 -18 UNF-2B SAE O-ring Case Drain Port (1)
7/16 -20 UNF-2B SAE O-ring Pilot Control Port (1) or

G 1/2 (BSP) Staggered Ports (2)
G 1/4 (BSP) Case Drain Port (1)
G 1/4 (BSP) Pilot Control Port (1)

Standard Rotation Viewed from Shaft End

Port A Pressurized — CW
Port B Pressurized — CCW

Two-Speed Bearingless Motors

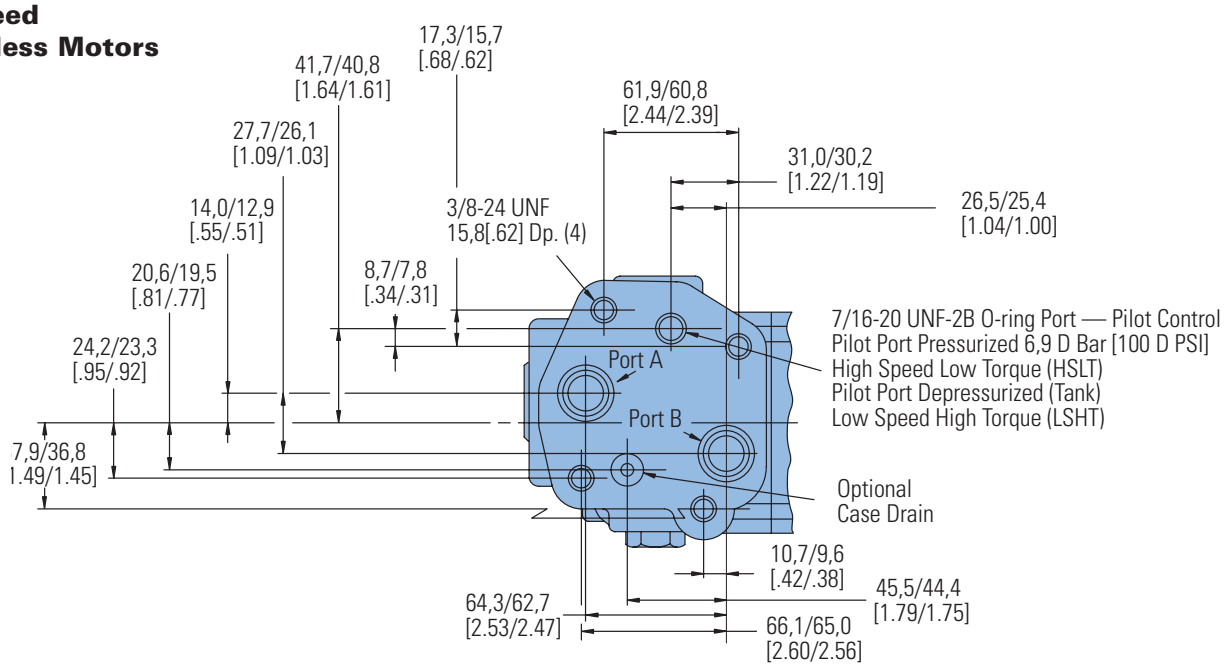

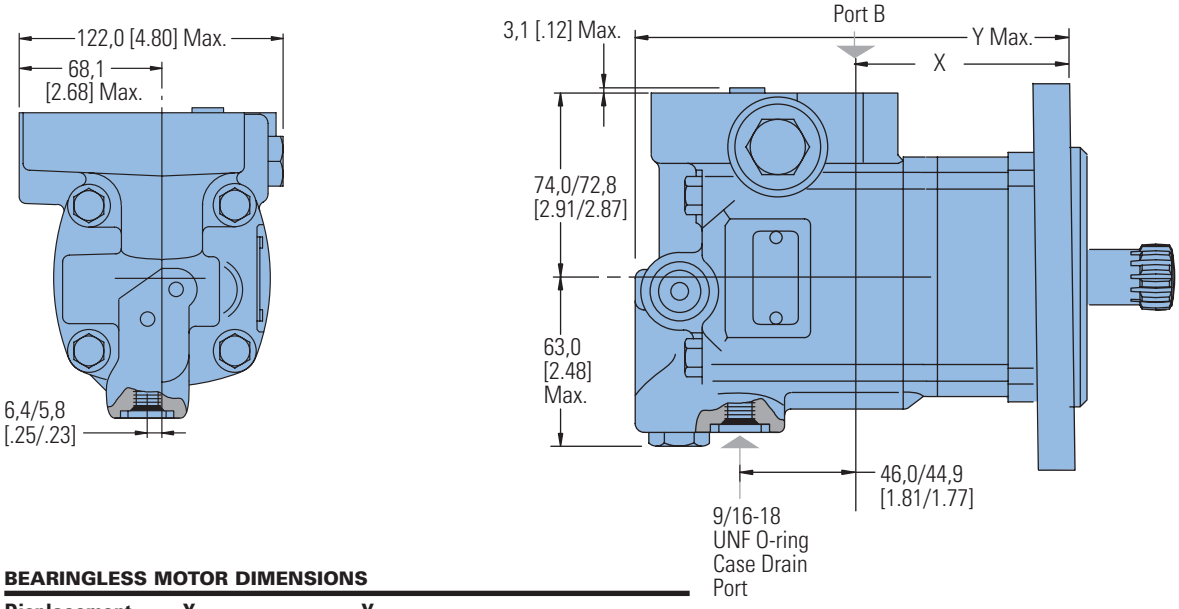

BEARINGLESS MOTOR DIMENSIONS

Displacement cm^3/r [in^3/r]	X mm [inch]	Y mm [inch]
80 [4.9]	79,3 [3.13]	174,0 [6.85]
100 [6.2]	84,1 [3.31]	178,9 [7.04]
130 [8.0]	90,7 [3.57]	185,2 [7.29]
160 [9.6]	90,7 [3.57]	185,2 [7.29]
195 [11.9]	97,3 [3.83]	191,8 [7.55]
245 [14.9]	106,4 [4.19]	201,0 [7.91]
305 [18.7]	117,8 [4.64]	212,4 [8.36]
395 [24.0]	133,6 [5.26]	228,4 [8.99]
490 [29.8]	151,1 [5.95]	245,6 [9.67]

2000 Series Two-Speed

Product Numbers

Note:

For 2000 Series Motors with a configuration **Not Shown** in the charts below, contact your Eaton Representative.

Use digit prefix — 193- plus four digit number from charts for complete product number—Example 193-0002.

Orders will not be accepted without three digit prefix.

MOUNTING	SHAFT	PORT SIZE	DISPL. cm^3/r [in^3/r] / PRODUCT NUMBER								
			80 [4.9]	100 [6.2]	130 [8.0]	160 [9.6]	195 [11.9]	245 [14.9]	305 [18.7]	395 [24.0]	490 [29.8]
2 Bolt SAE A Flange	1 Inch Straight	7/8 -14 O-ring Staggered	193-0002-001	-0003	-0004	-0005	-0006	-0007	-0008	-0009	—
	1 1/4 Inch Straight	7/8 -14 O-ring Staggered	193-0010-001	-0011	-0012	-0013	-0014	-0015	-0016	-0017	-0070
	1 1/4 Inch 14 T Splined	7/8 -14 O-ring Staggered	193-0018-001	-0019	-0020	-0021	-0022	-0023	-0024	-0025	—
Wheel Motor	1 1/4 Inch Tapered	7/8 -14 O-ring Staggered	193-0222-001	-0223	-0224	-0225	-0226	-0227	-0228	-0229	—
	1 1/4 Inch 14 T Splined	7/8 -14 O-ring Staggered	193-0230-001	-0231	-0232	-0233	-0234	-0235	-0236	-0237	—
Bearingless		7/8 -14 O-ring Staggered	193-0282-001	-0283	-0234	-0285	-0286	-0287	-0288	-0289	—

193-0288-001

C-1

2000 Series Two-Speed

Model Code (193-)

The following 30-digit coding system has been developed to identify all of the configuration options for the 2000 Series motor. Use this model code to specify a motor with the desired features. All 30 digits of the code must be present when ordering. You may want to photocopy the matrix below to ensure that each number is entered in the correct box.

M	2 2	* *	* *	* *	* *	* *	*	* *	1	*	* *	0 0	* *	* *	A A	A
1	2 3	4 5 6	7 8	9 10	11 12	13 14	15	16 17	18	19	20 21	22 23	24 25	26 27	28 29	30

1 Product
M – Motor

2, 3 Series
22 – 2000 2 Speed Series (1:2 Ratio)

4, 5, 6 Displacement
049 – 80.6 cm^3/r [4.92 in^3/r]
062 – 101.6 cm^3/r [6.20 in^3/r]
080 – 130.6 cm^3/r [7.97 in^3/r]
096 – 158.1 cm^3/r [9.65 in^3/r]
119 – 194.8 cm^3/r [11.89 in^3/r]
149 – 244.3 cm^3/r [14.91 in^3/r]
187 – 306.6 cm^3/r [18.71 in^3/r]
240 – 393.8 cm^3/r [24.03 in^3/r
298 – 489.0 cm^3/r [29.84 in^3/r]

7, 8 Mounting Description
AB – Wheel, 4 Bolt: 108.0 [4.25] Pilot Dia. 13.59 [.535] Dia. Holes on 147.6 [5.81] Dia. Bolt Circle. 127.0 [5.00] Dia. Rear Mount Pilot
AC – Standard, 2 Bolt: 82.6 [3.25] Pilot Dia. 13.59 [.535] Dia. Holes on 106.4 [4.19] Dia. Bolt Circle. SAE A
AE – Bearingless (w/ Leakage Slots), 4 Bolt: 101.6 [4.00] Pilot Dia. 13.59 [.535] Dia. Holes on 127.0 [5.00] Dia. Bolt Circle
AF – Standard, 2 Bolt: 101.6 [4.00] Pilot Dia. 14.35 [.565] Dia. Holes on 146.0 [5.75] Dia. Bolt Circle. SAE B
Dia Bolt Circle (European)

9, 10 Output Shaft Description
00 – None (Bearingless)
01 – 25.40 [1.000] Dia. Straight Shaft with 1/4-20UNC-2B Thread in End, 6.35 [.250] Wide x 25.40 [1.000] Dia. Woodruff Key
02 – 31.75 [1.250] Dia. Straight Shaft with .375-16UNC-2B Thread in End, 7.938 [.3125] Sq x 31.75 [1.250] Straight Key
03 – 31.75 [1.250] Dia. .125:1 Tapered Shaft per SAE J501 with/1.000-20 UNEF-2A Threaded Shaft End and Slotted Hex Nut, 7.938 [.3125] Sq x 25.40 [1.0] Straight Key
04 – 31.75 [1.250] Dia. Flat Root Side Fit, 14 Tooth, 12/24 DP 30° Involute Spline w/ .375-16UNC-2B Thread in End, 33.0 [1.30] Min. Full Spline

11, 12 Ports Description
AA – .875-14 UNF-2B SAE O-ring Ports - Staggered Ports
AB –12.70 [.500] and 15.88 [.625] Dia. Manifold Ports with 3 x .375-16 UNC-2B Port Block Mounting Holes

13, 14 Case Flow Options / Selector Valve
01 – .5625-10 UNF-2B SAE O-Ring Case Drain Port, .4375-20 UNF-2B SAE O-Ring Pilot Control Port, Optional .4375-20 UNF-2B SAE Case Drain Port for Pilot Operated Normally Low Speed

15 Shuttle Valve / Low Pressure Relief
0 – NONE

16, 17 Pressure / Flow Option
00 – NONE

18 Geroler Option
1 – STANDARD

19 Seal Option
00 – Standard Seals
02 – Seal Guard
03 – Viton Seals
04 – Viton Shaft Seal
11 – High pressure shaft seal, slinger seal
19 – Extreme duty seal guard

20, 21 Accessories
00 – NONE

22, 23 Special Features (Hardware)
00 – NONE

24, 25 Special Features (Assembly)
00 – NONE

26, 27 Paint / Packaging
AA – No Paint, Individual Box
AB – Low Gloss Black Primer, Individual Box

28, 29 Customer Identification
AA – NONE

30 Design Code
A – FIRST

4000 Compact Series

Highlights

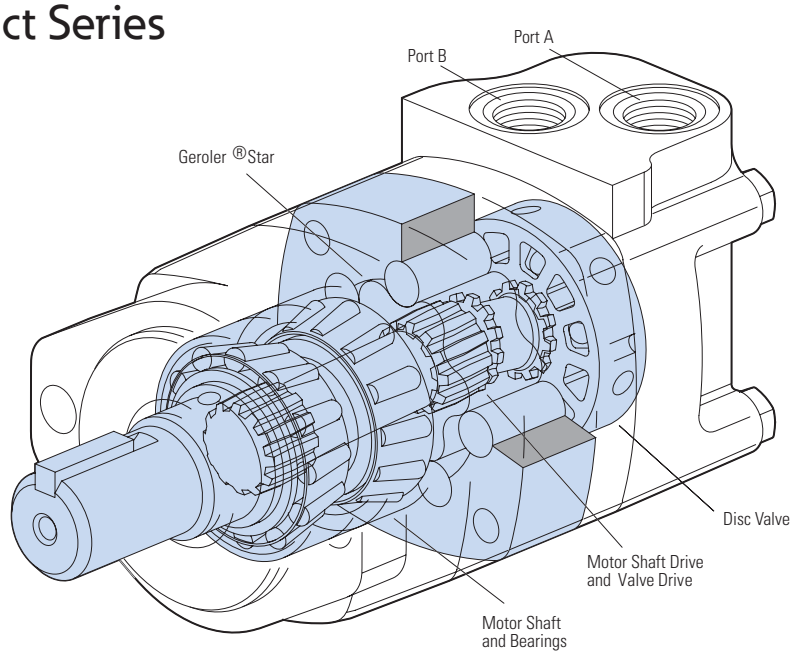

Features

- Shuttle Valve with Back-Pressure Relief Valve
- Speed Sensors
- End Ports.

Benefits

- Higher bearing capacity than 2000 Series
- Torque of 4000 Series

Applications

- Skid Steer Loaders
- Fairway Mowers
- Harvesters
- Vehicles where space may be at a premium.

Description

This new compact addition in a family of disc valve hydraulic motors produces the same amount of torque as the current 4000 Series. Yet, it is housed in an envelope similar to its smaller counterpart, the 2000 Series. The unit's intermittent torque rating is 1220 Nm [10800 lb-in]. A variety of mounting options include two 2 bolt mounts (SAE A, SAE B), and four 4 bolt mounts (magneto, standard and wheel mounts.) For added flexibility, the motor can be specified with either the larger size shafts of the 2000 Series of standard output shaft sizes of the 4000 Series, plus one new 1-1/2 inch straight (the small envelope and optional shaft sizes make this motor ideal for vehicles like skid-steer loaders whose hallmark is high power and productivity in a small frame.)

Specifications

Geroler Element	6 Displacements
Flow l/min [GPM]	75 [20] Continuous**
	115 [30] Intermittent*
Speed RPM	464 Cont.**
	699 Inter.*
Pressure bar [PSI]	200 [3000] Cont.**
	300 [4500] Inter.*
Torque Nm [lb-in]	975 [8627] Cont.**
	1218 [10788] Inter.*

** Continuous— (Cont.) Continuous rating, motor may be run continuously at these ratings.
* Intermittent— (Inter.) Intermittent operation, 10% of every minute.


Lawn and Turf


Skid Steer


Boom Lift


Harvestor

4000 Compact Series

Specifications

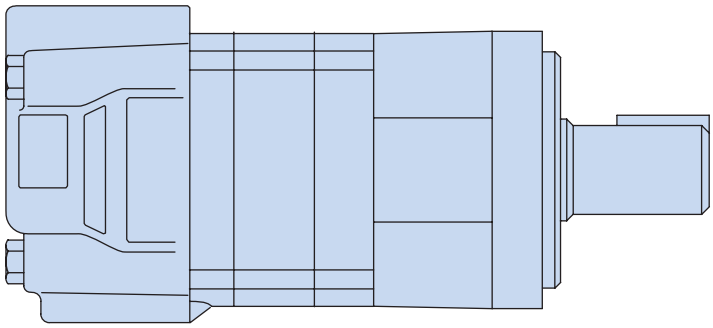

SPECIFICATION DATA — 4000 COMPACT SERIES MOTORS

Displ. cm^3/r [in^3/r]		160 [9.8]	200 [12.3]	250 [15.4]	325 [19.8]	405 [24.6]	490 [29.8]
Max. Speed (RPM)	Continuous	464	375	300	234	188	155
@ Flow	Intermittent	699	562	450	351	282	232
Flow	Continuous	75 [20]	75 [20]	75 [20]	75 [20]	75 [20]	75 [20]
l/min [GPM]	Intermittent	115 [30]	115 [30]	115 [30]	115 [30]	115 [30]	115 [30]
Torque*	Continuous	510 [4514]	758 [5715]	734 [6500]	793 [7021]	800 [7079]	975 [8627]
Nm [lb-in]	Intermittent	690 [6108]	840 [7436]	935 [8272]	1053 [9320]	921 [8153]	1218 [10778]
Pressure	Continuous	225 [3000]	225 [3000]	205 [3000]	170 [2500]	140 [2000]	140 [2000]
Δ bar	Intermittent	310 [4500]	295 [4250]	260 [3750]	240 [3500]	170 [2500]	171 [2500]
[Δ PSI]	Peak	310 [4500]	310 [4500]	310 [4500]	310 [4500]	275 [4000]	260 [3750]
Weight kg [lb]	Standard or Wheel Mount	10,4 [23.0]	10,9 [24.0]	11,3 [25.0]	11,8 [26.0]	12,2 [27.0]	12,2 [27.0]
	Bearingless	8,4 [18.5]	8,8 [19.5]	9,3 [20.5]	9,8 [21.5]	10,2 [22.5]	10,2 [22.5]

Maximum Case Pressure: See case pressure seal limitation graph.
*See shaft torque ratings for limitations.

Note:

To assure best motor life, run motor for approximately one hour at 30% of rated pressure before application to full load. Be sure motor is filled with fluid prior to any load applications.

Maximum Inlet Pressure:

310 bar [4500 PSI]

Do not exceed Δ pressure rating (see chart above).

Maximum Return Pressure:

310 bar [4500 PSI] with case drain line installed.

Do not exceed Δ pressure rating (see chart above).

Δ bar [Δ PSI] :

The true pressure difference between inlet port and outlet port

Continuous Rating:

Motor may be run continuously at these ratings

Intermittent Operation:

10% of every minute

Peak Operation:

1% of every minute

Recommended Fluids:

Premium quality, anti-wear type hydraulic oil with a viscosity of not less than 70 SUS at operating temperature.

Recommended System Operating Temp.:

-34°C to 82°C [-30°F to 180°F]

Recommended Filtration:

per ISO Cleanliness Code, 4406: 20/18/13

4000 Compact Series

Performance Data

Motors run with high efficiency in all areas designated with a number for torque and speed. For best motor life select a motor to run with a torque and speed range shown in the light shaded area.

Performance data is typical at 120 SUS. Actual data may vary slightly from unit to unit in production.

Continuous

Intermittent

Peak

No Operation

160cm³/r [9.8 in³/r]

ΔPressure Bar [PSI]

Flow LPM [GPM]

	[250] 15	[500] 35	[750] 50	[1000] 70	[1250] 85	[1500] 105	[1750] 120	[2000] 140	[2250] 155	[2500] 170	[2750] 190	[3000] 205	[3250] 225	[3500] 240	[3750] 260	[4000] 275	[4250] 295	[4500] 310
[0.25]	244	543																
	28	61																
0,95	4	3																
[0.5]	274	554	854															
	31	63	96															
1,9	10	8	7															
[1]	274	593	899	1210	1513	1816	2092	2361	2621	2874	3088							
	31	67	102	137	171	205	236	267	296	325	349							
3,8	22	21	20	19	17	14	12	10	9	7	6							
[2]	301	623	940	1261	1579	1898	2197	2492	2766	3033	3270	3496	3761	4022				
	34	70	106	143	178	214	248	282	313	343	369	395	425	454				
7,5	40	39	38	36	35	33	31	28	24	20	17	14	10	6				
[4]	305	662	1004	1354	1699	2046	2386	2725	3049	3368	3693	4016	4319	4618	4828	5022		
	34	75	113	153	192	231	270	308	344	381	417	454	488	522	545	567		
15	87	85	83	81	79	77	74	72	67	63	59	55	49	44	35	27		
[6]	293	659	1003	1357	1705	2056	2399	2741	3074	3405	3751	4098	4417	4732	5023	5308		
	33	74	113	153	193	232	271	310	347	385	424	463	499	535	568	600		
23	133	131	129	127	124	121	118	114	109	104	99	93	87	80	71	63		
[8]	280	656	1002	1360	1711	2066	2412	2758	3100	3442	3809	4180	4514	4846	5218	5593	5856	6108
	32	74	113	154	193	233	273	312	350	389	430	472	510	548	590	632	662	690
30	181	179	177	175	172	169	166	162	157	152	145	139	133	127	120	113	104	96
[10]	259	630	978	1348	1701	2061	2408	2755	3102	3450	3806	4163	4500	4835	5191	5547	5784	
	29	71	110	152	192	233	272	311	351	390	430	470	508	546	586	627	653	
38	228	225	223	220	217	213	209	204	199	193	186	179	172	165	157	150	141	
[12]	238	604	954	1336	1692	2056	2403	2752	3105	3458	3802	4146	4485	4824	5163	5501		
	27	68	108	151	191	232	272	311	351	391	430	468	507	545	583	622		
45	275	272	269	266	262	258	253	247	241	235	229	223	214	205	197	189		
[14]	210	577	923	1308	1665	2034	2385	2739	3092	3447	3796	4144	4487	4830				
	24	65	104	148	188	230	269	310	349	390	429	468	507	546				
53	322	319	316	313	308	304	298	293	286	279	272	265	256	247				
[16]	182	550	893	1280	1638	2012	2367	2727	3080	3436	3789	4143	4489	4836				
	21	62	101	145	185	227	267	308	348	388	428	468	507	546				
61	370	367	363	360	356	351	345	339	332	324	317	309	301	292				
[18]	143	514	853	1247	1601	1973	2329	2692	3045	3401	3756	4114						
	16	58	96	141	181	223	263	304	344	384	424	465						
68	417	414	410	406	401	397	390	383	375	366	358	350						
[20]	105	478	814	1213	1564	1935	2291	2658	3010	3366	3724	4085						
	12	54	92	137	177	219	259	300	340	380	421	462						
76	464	461	457	453	448	442	435	428	418	409	400	390						
[22]		433	762	1167	1518	1893	2252	2623	2973	3328	3682	4040						
		49	86	132	172	214	254	296	336	376	416	456						
83		508	504	500	495	489	482	474	465	456	446	436						
[24]		387	711	1121	1472	1851	2212	2589	2937	3291	3641	3995						
		44	80	127	166	209	250	292	332	372	411	451						
91		556	552	548	542	537	529	521	513	504	493	483						
[25]		363	683	1095	1445	1824	2184	2561	2910	3266								
		41	77	124	163	206	247	289	329	369								
95		580	576	572	566	560	552	544	535	526								
[30]		244	546	967	1308	1689	2045	2421	2777	3144								
		28	62	109	148	191	231	274	314	355								
114		699	695	692	685	678	669	660	648	637								

[2777] 314 648 } Torque [lb-in] Nm Speed RPM

C-2

4000 Compact Series

Performance Data

Motors run with high efficiency in all areas designated with a number for torque and speed. For best motor life select a motor to run with a torque and speed range shown in the light shaded area.

Performance data is typical at 120 SUS. Actual data may vary slightly from unit to unit in production.

Continuous

Intermittent

Peak

No Operation

200cm³/r [12.3 in³/r]
ΔPressure Bar [PSI]

Flow LPM [GPM]

	[250] 15	[500] 35	[750] 50	[1000] 70	[1250] 85	[1500] 105	[1750] 120	[2000] 140	[2250] 155	[2500] 170	[2750] 190	[3000] 205	[3250] 225	[3500] 240	[3750] 260	[4000] 275	[4250] 295
[0.25]	115	504															
	13	57															
0,95	4	3															
[0.5]	268	584	963	1274													
	30	66	109	144													
1,9	8	7	4	3													
[1]	306	721	1104	1516	1913	2243	2397	2772									
	35	81	125	171	216	253	271	313									
3,8	17	16	14	13	12	10	9	6									
[2]	402	841	1218	1647	2107	2478	2826	3238	3954	4451	4755	5127	5407	5569	5855		
	45	95	138	186	238	280	319	366	447	503	537	579	611	629	662		
7,5	35	34	32	31	30	28	27	24	29	26	23	21	17	11	8		
[4]	403	896	1361	1780	2247	2649	3068	3513	3947	4367	4710	5125	5509	5880	6249	6547	6753
	46	101	154	201	254	299	347	397	446	493	532	579	622	664	706	740	763
15	72	70	69	68	66	65	62	60	56	53	50	46	42	37	31	24	19
[6]	385	863	1354	1785	2260	2657	3087	3547	3965	4389	4793	5218	5610	6015	6408	6754	7436
	44	98	153	202	255	300	349	401	448	496	542	590	634	680	724	763	840
23	109	107	106	104	102	100	97	93	90	86	81	77	72	66	60	52	47
[8]	368	831	1347	1790	2273	2665	3106	3581	3982		4876	5311	5712	6151	6567	6961	7334
	42	94	152	202	257	301	351	405	450	498	551	600	645	695	742	786	829
30	147	146	144	142	140	137	134	130	127	122	117	113	108	103	98	91	83
[10]	353	822	1319	1774	2212	2642	3086	3556	3974	4410	4839	5297	5715	6147	6563		
	40	93	149	200	250	299	349	402	449	498	547	598	646	695	742		
38	185	184	181	179	177	174	170	165	161	156	151	146	140	134	129		
[12]	339	813	1291	1758	2151	2620	3067	3530	3965	4408	4802	5283	5718	6144	6568		
	38	92	146	199	243	296	346	399	448	498	543	597	646	694	742		
45	223	222	219	217	214	211	207	202	197	192	186	180	174	167	164		
[14]	282	762	1237	1693	2121	2601	2968	3504	3953	4368	4832	5261	5690				
	32	86	140	191	240	294	335	396	447	493	546	594	643				
53	261	260	257	255	252	248	244	238	233	227	221	214	208				
[16]	224	712	1183	1629	2091	2581	2870	3477	3940	4328	4861	5240	5661				
	25	80	134	184	236	292	324	393	445	489	549	592	640				
61	299	298	296	293	290	286	282	275	269	263	256	249	243				
[18]	200	667	1148	1619	2053	2520	2899	3442	3906	4337	4819	5245	5644				
	23	75	130	183	232	285	328	389	441	490	544	593	638				
68	337	336	334	331	328	324	320	314	307	301	293	285	278				
[20]	176	623	1112	1609	2014	2458	2929	3407	3872	4347	4777	5250	5627				
	20	70	126	182	228	278	331	385	437	491	540	593	636				
76	375	374	372	369	366	363	358	353	346	339	331	322	315				
[22]		565	1053	1530	1934	2387	2868	3347	3804	4254	4698						
		64	119	173	219	270	324	378	430	481	531						
83		412	410	407	404	401	396	390	383	375	367						
[24]		507	994	1450	1855	2316	2806	3287	3737	4162	4618						
		57	112	164	210	262	317	371	422	470	522						
91		449	448	446	443	439	434	427	420	412	403						
[25]		465	950	1411	1820	2276	2768	3233	3688	4116	4493						
		53	107	159	206	257	313	365	417	465	508						
95		468	467	464	462	458	453	446	439	431	423						
[30]		259	726	1214	1645	2072	2577	2961	3443	3889	3866						
		29	82	137	186	234	291	335	389	439	437						
114		562	563	559	555	556	550	545	536	527	521						

[2072] 234 556 } Torque [lb-in] Nm Speed RPM

4000 Compact Series

Performance Data

Motors run with high efficiency in all areas designated with a number for torque and speed. For best motor life select a motor to run with a torque and speed range shown in the light shaded area.

Performance data is typical at 120 SUS. Actual data may vary slightly from unit to unit in production.

Continuous

Intermittent

Peak

No Operation

250cm³/r [15.4 in³/r]
ΔPressure Bar [PSI]

	[250] 15	[500] 35	[750] 50	[1000] 70	[1250] 85	[1500] 105	[1750] 120	[2000] 140	[2250] 155	[2500] 170	[2750] 190	[3000] 205	[3250] 225	[3500] 240	[3750] 260
[0.5]	384	833													
	43	94													
1,9	6	5													
[1]	438	904	1403	1887	2359	2798	3221	3657	3822	4326					
	49	102	158	213	267	316	364	413	432	489					
3,8	14	14	13	12	11	9	8	7	4	3					
[2]	492	1054	1563	2081	2623	3160	3717	4147	4585	5070	5470	5721	5962		
	56	119	177	235	296	357	420	469	518	573	618	646	674		
7,5	28	27	26	25	24	23	21	17	16	13	9	7	5		
[4]	603	1183	1771	2275	2817	3364	3895	4495	5005	5496	5982	6500	7054	7519	7941
	68	134	200	257	318	380	440	508	565	621	676	734	797	850	897
15	58	56	55	54	52	50	47	44	42	38	35	32	28	24	17
[6]	587	1159	1741	2329	2815	3369	3951	4483	5021	5555	6068	6557	7131	7641	8107
	66	131	197	263	318	381	446	506	567	628	686	741	806	863	916
23	88	86	84	82	80	77	74	71	67	63	59	55	50	45	38
[8]	571	1135	1710	2384	2813	3375	4008	4471	5038	5613	6154	6614	7209	7763	8272
	65	128	193	269	318	381	453	505	569	634	695	747	815	877	935
30	118	116	114	112	110	107	103	100	96	92	87	83	78	73	67
[10]	552	1138	1671	2304	2804	3361	3950	4452	5006	5587	6123	6612	7201		
	62	129	189	260	317	380	446	503	566	631	692	747	814		
38	148	146	144	142	139	136	131	127	123	119	113	109	102		
[12]	532	1140	1631	2224	2796	3347	3892	4434	4974	5561	6093	6610	7193		
	60	129	184	251	316	378	440	501	562	628	688	747	813		
45	178	177	175	173	170	166	161	157	151	146	141	136	129		
[14]	441	1072	1600	2207	2754	3320	3888	4433	4958	5529	6066	6590			
	50	121	181	249	311	375	439	501	560	625	685	745			
53	209	207	205	202	199	195	190	185	179	174	168	162			
[16]	349	1003	1568	2190	2711	3292	3884	4431	4941	5496	6039	6570			
	39	113	177	247	306	372	439	501	558	621	682	742			
61	239	237	235	233	229	225	220	214	208	202	195	189			
[18]	306	940	1513	2114	2653	3251	3830	4380	4904	5446	5984	6518			
	35	106	171	239	300	367	433	495	554	615	676	736			
68	269	267	265	263	259	255	250	243	236	230	223	214			
[20]	263	876	1458	2038	2595	3210	3777	4328	4867	5395	5928	6471			
	30	99	165	230	293	363	427	489	550	610	670	731			
76	300	298	296	293	290	285	280	272	265	259	251	241			
[22]		826	1414	1991	2528	3144	3709	4262	4806	5354	5915				
		93	160	225	286	355	419	482	543	605	668				
83		328	326	323	320	315	309	302	295	288	279				
[24]		776	1370	1945	2462	3079	3642	4196	4745	5313	5901				
		88	155	220	278	348	411	474	536	600	667				
91		359	356	354	350	345	339	332	325	317	308				
[25]		732	1322	1959	2426	3026	3594	4153	4696	5152					
		83	149	221	274	342	406	469	531	582					
95		374	371	369	365	360	354	347	340	333					
[30]		509	1082	2029	2246	2761	3358	3939	4450	4347					
		57	122	229	254	312	379	445	503	491					
114		450	449	445	442	437	430	423	414	413					

[2246] Torque [lb-in]
254 Nm
442 Speed RPM

C-2

4000 Compact Series

Performance Data

Motors run with high efficiency in all areas designated with a number for torque and speed. For best motor life select a motor to run with a torque and speed range shown in the light shaded area.

Performance data is typical at 120 SUS. Actual data may vary slightly from unit to unit in production.

Continuous

Intermittent

Peak

No Operation

325cm³/r [19.8 in³/r]
ΔPressure Bar [PSI]

Flow LPM [GPM]

	[250] 15	[500] 35	[750] 50	[1000] 70	[1250] 85	[1500] 105	[1750] 120	[2000] 140	[2250] 155	[2500] 170	[2750] 190	[3000] 205	[3250] 225	[3500] 240
[0.5]	536	1152												
	61	130												
1,9	5	4												
[1]	555	1220	1900	2559	3222	3862	4522	5061	5580	6106				
	63	138	215	289	364	436	511	572	630	690				
3,8	11	10	10	9	9	8	7	5	3	3				
[2]	643	1349	2025	2712	3378	4051	4696	5335	5889	6366	6876			
	73	152	229	306	382	458	531	603	665	719	777			
7,5	22	21	20	19	19	17	15	13	10	5	3			
[4]	679	1420	2140	2852	3557	4259	4947	5628	6300	6960	7596	8201	8767	9320
	77	160	242	322	402	481	559	636	712	786	858	927	991	1053
15	45	44	43	42	40	38	36	33	30	26	23	19	14	11
[6]	654	1400	2132	2859	3575	4281	4977	5668	6346	7021	7678	8244	8792	
	74	158	241	323	404	484	562	640	717	793	868	931	993	
23	68	67	66	64	62	59	56	53	49	44	40	38	35	
[8]	629	1379	2125	2866	3592	4304	5007	5707	6392	7082	7760	8400		
	71	156	240	324	406	486	566	645	722	800	877	949		
30	92	90	89	87	85	82	79	75	71	66	61	56		
[10]	587	1337	2082	2827	3556	4272	4976	5672	6362	7053				
	66	151	235	319	402	483	562	641	719	797				
38	115	114	112	110	107	103	100	94	90	85				
[12]	546	1295	2040	2787	3520	4240	4944	5638	6332	7023				
	62	146	230	315	398	479	559	637	715	794				
45	139	137	136	134	130	125	121	115	110	105				
[14]	489	1238	1984	2729	3467	4193	4903	5600	6293					
	55	140	224	308	392	474	554	633	711					
53	162	161	159	157	153	148	143	136	131					
[16]	431	1182	1929	2671	3415	4145	4861	5562	6254					
	49	134	218	302	386	468	549	628	707					
61	186	185	183	181	177	171	165	159	153					
[18]	360	1110	1856	2600	3343	4073	4794	5499						
	41	125	210	294	378	460	542	621						
68	210	208	206	204	200	195	189	183						
[20]	288	1038	1784	2529	3271	4001	4726	5436						
	33	117	202	286	370	452	534	614						
76	234	232	230	228	224	220	214	207						
[22]		958	1706	2451	3194	3926	4650	5360						
		108	193	277	361	444	525	606						
83		256	254	251	248	243	237	229						
[24]		878	1628	2373	3116	3850	4574	5285						
		99	184	268	352	435	517	597						
91		279	277	275	271	266	260	252						
[25]		826	1576	2320	3063	3798	4523							
		93	178	262	346	429	511							
95		291	289	287	283	277	271							
[30]		566	1314	2056	2799	3536	4268							
		64	148	232	316	399	482							
114		351	349	346	342	337	332							

[2799] Torque [lb-in]
316 Nm
342 Speed RPM

4000 Compact Series

Performance Data

Motors run with high efficiency in all areas designated with a number for torque and speed. For best motor life select a motor to run with a torque and speed range shown in the light shaded area.

Performance data is typical at 120 SUS. Actual data may vary slightly from unit to unit in production.

Continuous

Intermittent

Peak

No Operation

405cm³/r [24.6 in³/r]
ΔPressure Bar [PSI]

Flow LPM [GPM]

	[250] 15	[500] 35	[750] 50	[1000] 70	[1250] 85	[1500] 105	[1750] 120	[2000] 140	[2250] 155	[2500] 170
[0.5]	719	1458								
	81	165								
1,9	3	2								
[1]	777	1631	2423	3148	3690					
	88	184	274	356	417					
3,8	8	7	5	4	3					
[2]	853	1812	2596	3375	4179	4845	5375	5841	6501	
	96	205	293	381	472	547	607	660	735	
7,5	17	15	14	12	11	9	8	3	2	
[4]	878	1859	2687	3667	4554	5388	6232	7004	7660	8153
	99	210	304	414	515	609	704	791	865	921
15	35	34	32	30	28	25	23	19	16	11
[6]	882	1836	2716	3680	4577	5388	6269	7079	7856	
	100	207	307	416	517	609	708	800	888	
23	54	52	51	48	46	42	39	35	31	
[8]	885	1813	2746	3694	4600	5388	6307	7153	8052	
	100	205	310	417	520	609	713	808	910	
30	73	72	70	68	65	62	58	55	50	
[10]	810	1736	2693	3639	4540	5390	6310	7151	7994	
	92	196	304	411	513	609	713	808	903	
38	92	90	89	86	84	80	75	71	67	
[12]	735	1660	2640	3584	4480	5391	6314	7149		
	83	188	298	405	506	609	713	808		
45	111	110	108	106	103	98	93	88		
[14]	661	1622	2560	3512	4412	5330	6242	7059		
	75	183	289	397	498	602	705	798		
53	130	128	127	124	121	117	112	108		
[16]	587	1585	2480	3440	4343	5268	6170			
	66	179	280	389	491	595	697			
61	149	147	146	143	141	137	131			
[18]	492	1472	2379	3333	4270	5190	6084			
	56	166	269	377	482	586	687			
68	168	167	165	162	160	156	150			
[20]	397	1359	2279	3226	4197	5112	5999			
	45	153	257	365	474	578	678			
76	188	186	184	182	179	175	170			
[22]		1264	2194	3124	4093	5008	5904			
		143	248	353	462	566	667			
83		205	203	201	198	193	188			
[24]		1169	2110	3023	3989	4904	5810			
		132	238	342	451	554	656			
91		224	222	220	216	212	207			
[25]		1106	2049	2961	3929	4851	5766			
		125	231	335	444	548	651			
95		233	232	229	226	222	217			
[30]		790	1744	2655	3634	4587	5543			
		89	197	300	411	518	626			
114		282	280	277	274	270	266			

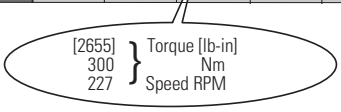

C-2

4000 Compact Series

Performance Data

Motors run with high efficiency in all areas designated with a number for torque and speed. For best motor life select a motor to run with a torque and speed range shown in the light shaded area.

Performance data is typical at 120 SUS. Actual data may vary slightly from unit to unit in production.

Continuous

Intermittent

Peak

No Operation

490cm³/r [29.8 in³/r]
△Pressure Bar [PSI]

Flow LPM [GPM]

	[250] 15	[500] 35	[750] 50	[1000] 70	[1250] 85	[1500] 105	[1750] 120	[2000] 140	[2250] 155	[2500] 170
[0.5]	375	1669								
	42	189								
1,9	3	3								
[1]	525	1762	2945	3965	5099	5926	6715	7503		
	59	199	333	448	576	670	759	848		
3,8	7	7	6	6	6	5	4	3		
[2]	639	2108	3287	4169	5416	6570	7188	8295	8959	
	72	238	371	471	612	742	812	937	1012	
7,5	14	14	13	13	11	11	9	6	5	
[4]	981	2201	3333	4574	5558	6634	7694	8627	9567	10399
	111	249	377	517	628	750	869	975	1081	1175
15	30	29	29	28	27	26	24	21	18	13
[6]	1049	2218	3332	4584	5604	6670	7711	8713	9698	10588
	119	251	376	518	633	754	871	984	1096	1196
23	45	45	44	43	42	40	38	35	31	26
[8]	1118	2236	3331	4593	5650	6705	7727	8798	9828	10778
	126	253	376	519	638	758	873	994	1110	1218
30	61	60	60	59	58	56	54	51	48	44
[10]	1060	2230	3304	4503	5607	6693	7721	8836		
	120	252	373	509	633	756	872	998		
38	76	76	75	75	73	72	69	66		
[12]	1003	2223	3276	4413	5564	6680	7715	8874		
	113	251	370	499	629	755	872	1003		
45	92	91	91	90	89	88	85	82		
[14]	858	2127	3136	4320	5496	6542	7653			
	97	240	354	488	621	739	865			
53	108	107	107	106	105	103	100			
[16]	713	2030	2997	4226	5428	6403	7590			
	81	229	339	477	613	723	858			
61	124	123	122	122	121	119	115			
[18]	631	1907	2935	4133	5330	6339	7431			
	71	215	332	467	602	716	840			
68	139	139	138	137	136	134	130			
[20]	548	1784	2872	4041	5232	6275	7362			
	62	202	325	457	591	709	832			
76	155	154	153	153	152	150	148			
[22]		1669	2704	3928	5048	6124	7208			
		189	306	444	570	692	814			
83		170	169	169	168	166	164			
[24]		1553	2536	3816	4864	5972	7055			
		175	287	431	550	675	797			
91		186	185	185	184	182	179			
[25]		1469	2475	3737	4810	5909	6959			
		166	280	422	543	668	786			
95		193	193	193	192	190	187			
[30]		1047	2172	3341	4538	5592	6482			
		118	245	378	513	632	732			
114		232	232	232	231	229	227			

[3341] Torque [lb-in]
378 Nm
232 Speed RPM

4000 Compact Series

Dimensions

Standard Mount

Ports

7/8 -14 UNF-2B SAE O-ring Staggered Ports (2)
7/16 -20 UNF-2B SAE O-ring Case Drain Port (1) or

1 1/16 -12 UN-2B SAE O-ring Ports (Positioned 180° Apart) (2)
7/16 -20 UNF-2B SAE O-ring Case Drain Port (1) or

7/8 -14 UNF-2B SAE O-ring End Ports (2)
7/16 -20 UNF-2B SAE O-ring Case Drain Port (1) or

G 1/2 (BSP) Staggered Ports (2)
G 1/4 (BSP) Case Drain Port (1) or

Manifold Mount
7/16 -20 UNF-2B SAE O-ring Case Drain Port (1)

Standard Rotation Viewed from Shaft End

Port A Pressurized — CW
Port B Pressurized — CCW

Standard Mount

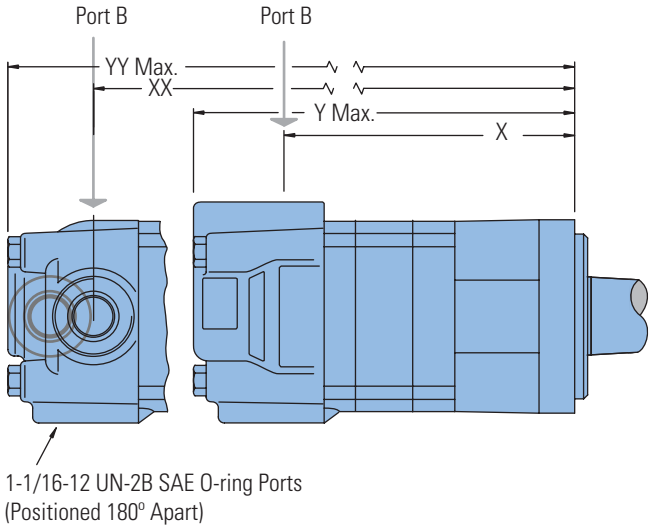

1-1/16-12 UN-2B SAE O-ring Ports
(Positioned 180° Apart)

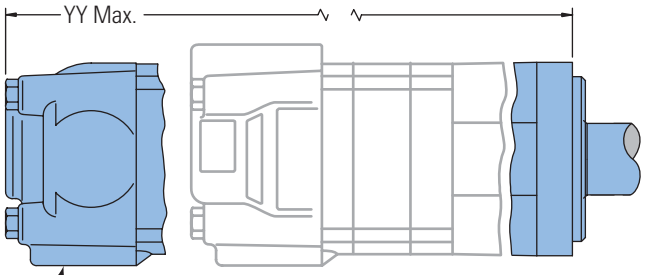

7/8-14 UNF-2B SAE O-ring End Ports

STANDARD MOUNT MOTOR DIMENSIONS

Displacement cm^3/r [in^3/r]	X mm [inch]	Y mm [inch]	XX mm [inch]	YY mm [inch]
160 [9.8]	154,7 [6.09]	201,9 [7.95]	157,0 [6.18]	203,3 [8.00]
200 [12.3]	163,8 [6.45]	211,1 [8.31]	166,1 [6.54]	212,3 [8.36]
250 [15.4]	175,3 [6.90]	222,5 [8.76]	177,5 [6.99]	223,8 [8.81]
325 [19.8]	191,0 [7.52]	238,5 [9.39]	193,3 [7.61]	239,8 [9.44]
405 [24.6]	208,5 [8.21]	255,8 [10.07]	210,8 [8.30]	257,0 [10.12]
490 [29.8]	208,5 [8.21]	255,8 [10.07]	210,8 [8.30]	257,0 [10.12]

4000 Compact Series

Dimensions

Wheel Mount

Ports

7/8 -14 UNF-2B SAE O-ring Staggered Ports (2)
7/16 -20 UNF-2B SAE O-ring Case Drain Port (1) or

1 1/16 -12 UN-2B SAE O-ring Ports (Positioned 180° Apart) (2)
7/16 -20 UNF-2B SAE O-ring Case Drain Port (1) or

7/8 -14 UNF-2B SAE O-ring End Ports (2)
7/16 -20 UNF-2B SAE O-ring Case Drain Port (1) or

G 1/2 (BSP) Staggered Ports (2)
G 1/4 (BSP) Case Drain Port (1) or

Manifold Mount
7/16 -20 UNF-2B SAE O-ring Case Drain Port (1)

Standard Rotation Viewed from Shaft End

Port A Pressurized — CW
Port B Pressurized — CCW

Wheel Mount

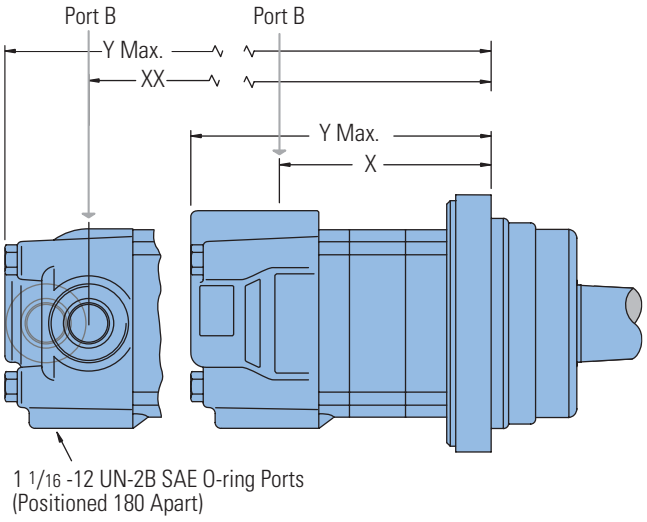

1 1/16 -12 UN-2B SAE O-ring Ports
(Positioned 180 Apart)

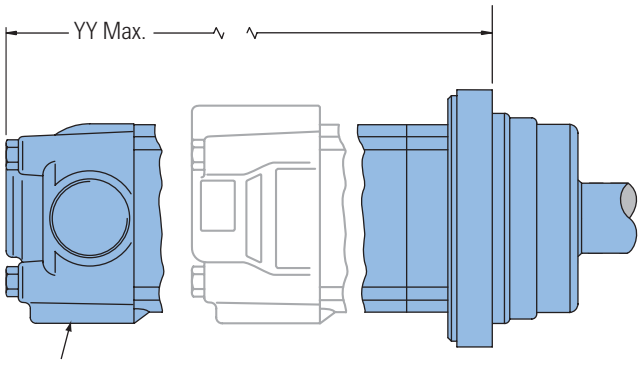

7/8-14 UNF-2B SAE O-ring End Ports

WHEEL MOUNT MOTOR DIMENSIONS

Displacement cm^3/r [in^3/r]	X mm [inch]	Y mm [inch]	XX mm [inch]	YY mm [inch
160 [9.8]	114,6 [4.51]	161,8 [6.37]	114,6 [4.51]	161,8 [6.37]
200 [12.3]	123,7 [4.87]	170,9 [6.73]	123,7 [4.87]	170,9 [6.73]
250 [15.4]	135,1 [5.32]	182,4 [7.18]	135,1 [5.32]	182,4 [7.18]
325 [19.8]	150,9 [5.94]	198,4 [7.81]	150,9 [5.94]	198,4 [7.81]
405 [24.6]	168,4 [6.63]	215,6 [8.49]	168,4 [6.63]	215,6 [8.49]
490 [29.8]	168,4 [6.63]	215,6 [8.49]	168,4 [6.63]	215,6 [8.49]

4000 Compact Series

Dimensions

Bearingless

Ports

7/8 -14 UNF-2B SAE O-ring Staggered Ports (2)
7/16 -20 UNF-2B SAE O-ring Case Drain Port (1) or

1 1/16 -12 UN-2B SAE O-ring Ports (Positioned 180° Apart) (2)
7/16 -20 UNF-2B SAE O-ring Case Drain Port (1) or

7/8 -14 UNF-2B SAE O-ring End Ports (2)
7/16 -20 UNF-2B SAE O-ring Case Drain Port (1) or

G 1/2 (BSP) Staggered Ports (2)
G 1/4 (BSP) Case Drain Port (1) or

Manifold Mount
7/16 -20 UNF-2B SAE O-ring Case Drain Port (1)

Standard Rotation Viewed from Shaft End

Port A Pressurized — CW
Port B Pressurized — CCW

Bearingless

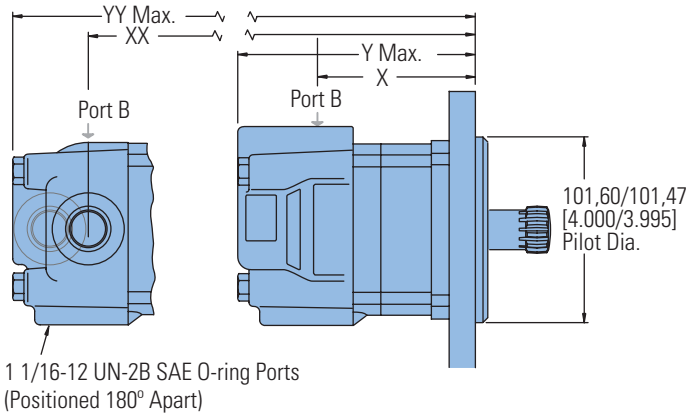

For 4000 bearingless motor application information, contact your Eaton representative (mating coupling blanks available from Eaton Hydraulics).

Note:

After machining blank, part must be hardened per Eaton specification.

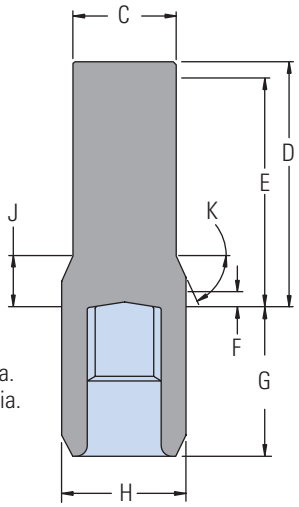

C 47,2 [1.86] Dia.
D 112,5 [4.43] Max.
E 107,4 [4.23] Full Form Dia.
F 7,4 [.29]Min. Full Form Dia.
G 68,8 [2.71] Max.
H 56,9 [2.24] Dia.
J 18,29 [.720]
K 38°

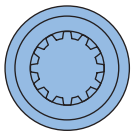

Mating Coupling Blank
Eaton Part No. 12745-003

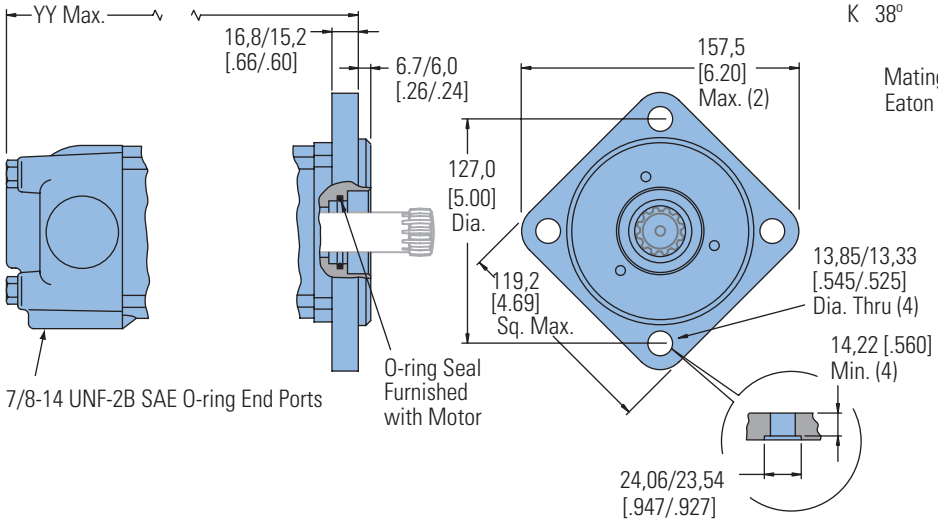

BEARINGLESS MOTOR DIMENSIONS

Displacement cm³/r [in³/r]	X mm [inch]	Y mm [inch]	XX mm [inch]	YY mm [inch]
160 [9.8]	96,8 [3.81]	144,3 [5.68]	99,1 [3.90]	145,5 [5.73]
200 [12.3]	105,7 [4.16]	153,4 [6.04]	108,0 [4.25]	154,7 [6.09]
250 [15.4]	117,1 [4.61]	164,8 [6.49]	119,4 [4.70]	166,1 [6.54]
325 [19.8]	133,1 [5.24]	180,8 [7.12]	135,4 [5.33]	182,1 [7.17]
405 [24.6]	150,4 [5.92]	198,1 [7.80]	152,7 [6.01]	199,4 [7.85]
490 [29.8]	150,4 [5.92]	198,1 [7.80]	152,7 [6.01]	199,4 [7.85]

4000 Compact Series

Installation Information

Bearingless

1 Internal spline in mating part to be per spline data specification. Material to be ASTM A304, 8620H vacuum degassed alloy steel carbonize to a hardness of 59-62 HRc with case depth (to 50HRc) of 0,76 - 1,02 [.030 - .040] dimensions apply after heat treat.

(2) Mating part to have critical dimensions as shown. Oil holes must be provided and open for proper oil circulation.

(3) Seal to be furnished with motor for proper oil circulation thru splines.

(4) Some means of maintaining clearance between shaft and mounting flange must be provided.

(5) Counterbore designed to adapt to a standard sleeve bearing 50,010 - 50,040 [1.9689 - 1.9700] ID by 60,050 - 60,080 [2.3642 - 2.3653] (Oilite bronze sleeve bearing) Source: Beemer Precision Inc. www.oilite.com, 1-800-836-2340
AAM 50 mm ID - 60 mm OD Length Determined by the Customer.
Stock Bearing Lengths:
35 mm
50 mm
60 mm
70 mm
75 mm

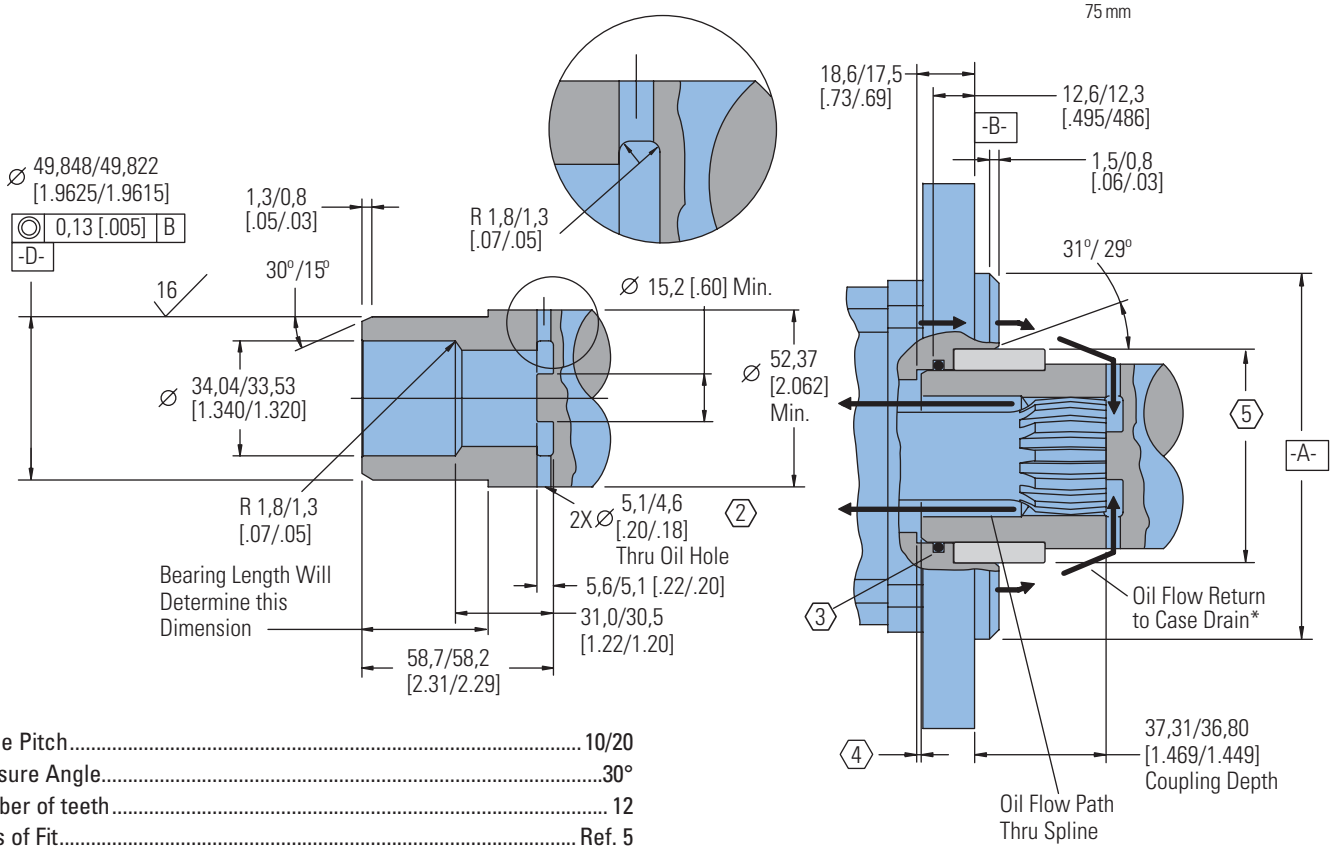

Spline Pitch	10/20
Pressure Angle	30°
Number of teeth	12
Class of Fit	Ref. 5
Type of Fit	Side
Pitch Diameter	Ref. 30,480000 [1.2000000] ⌖ 0,20 [.008] D
Base Diameter	Ref. 26,396455 [1.0392305]
Major Diameter	(33,43 [1.316] Max. 33,23 [1.308] Min.)
Minor Diameter	28,40 - 25,58 [1.118 - 1.125]
Form Diameter, Min.	32,59 [1.283]
Fillet Radius	0,63 - 0,76 [.025 - .030]
Tip Radius	0,26 - 0,51 [.010 - .020]
Finish	1,6 (63)
Involute Profile Variation	+0,000 -0,025 [+.0000 -.0010]
Total Index Variation	0,038 [.0015]
Lead Variation	0,013 [.0005]
Circular Space Width:	
Maximum Actual	5,045 [.1986]
Minimum Effective	4,995 [.1951]
Maximum Effective	Ref. 5,009 [.1972]
Minimum Actual	Ref. 4,986 [.1963]
Dimension Between Two Pins	Ref. 22,783 - 22,929 [.8970 - .9027]
Pin Diameter	5,334 [.2100] Pins to Have 3,73 [.147] Wide Flat for Root Clearance

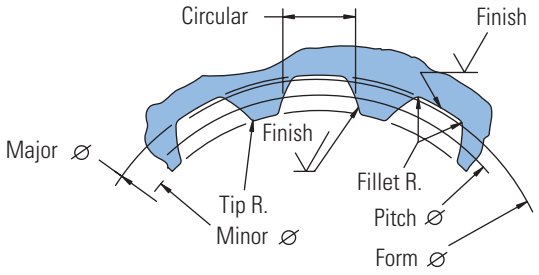

SAE A — Two Bolt (Standard Motor)

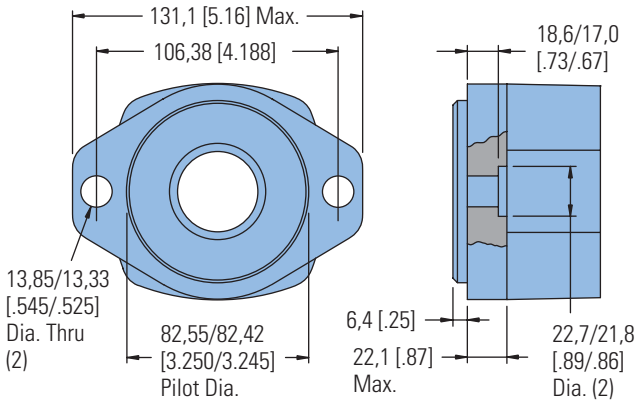

Four Bolt Magneto

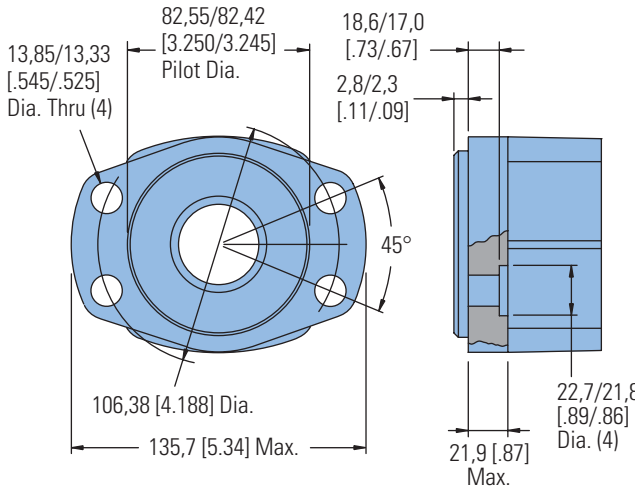

Two Bolt SAE B

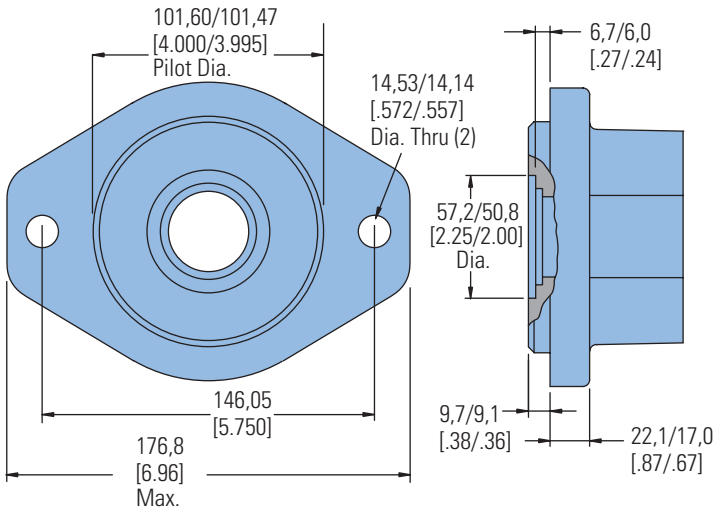

Four Bolt

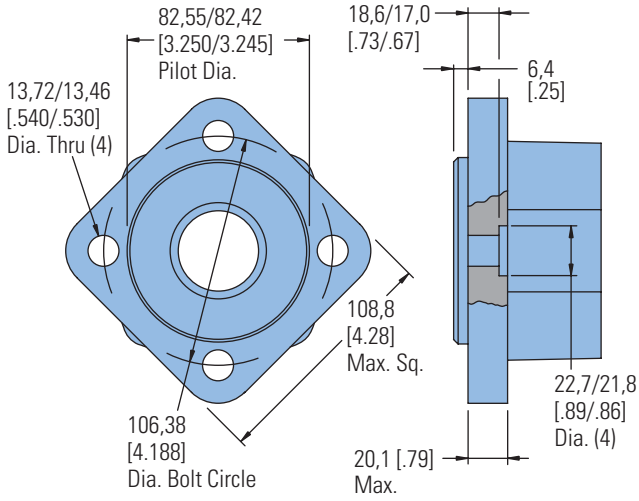

Four Bolt (Wheel Motor)

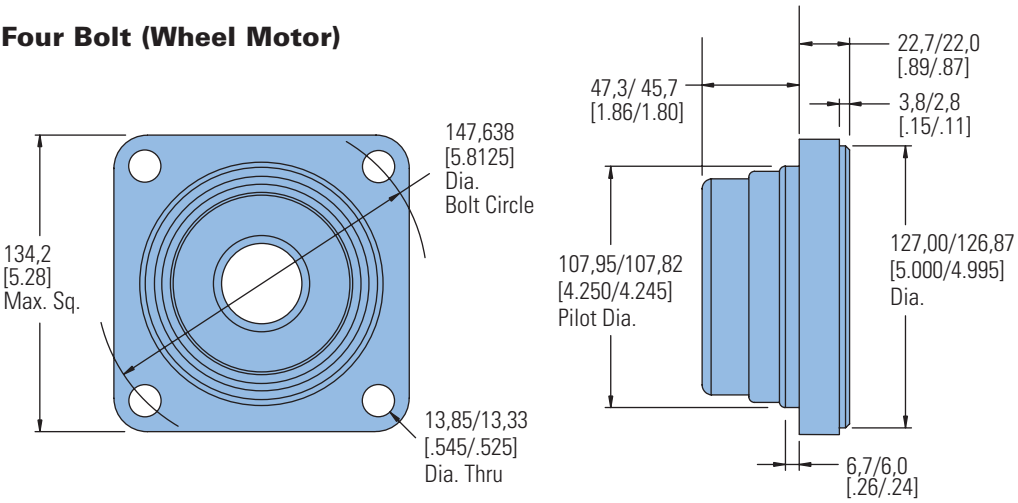

C-2

4000 Compact Series

Dimensions

Mounting Options for use with Enhanced Bearings

Standard Flange- Similar to SAE B type

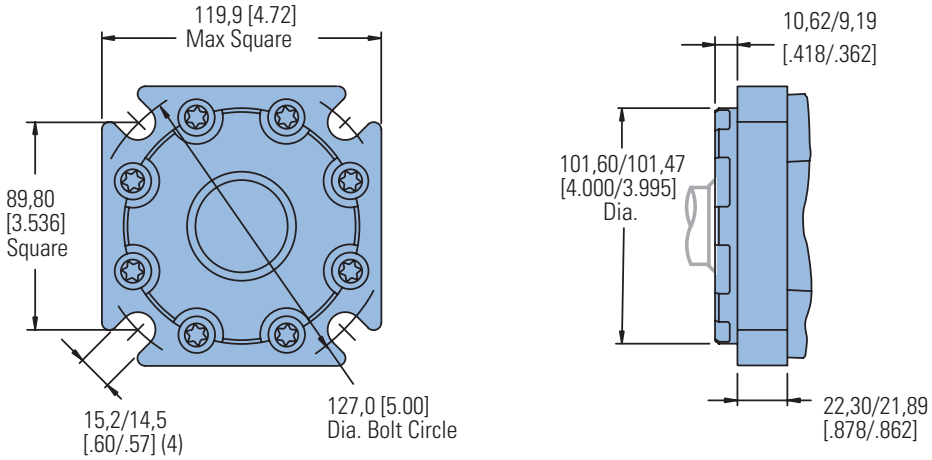

Four Bolt (Wheel Motor)

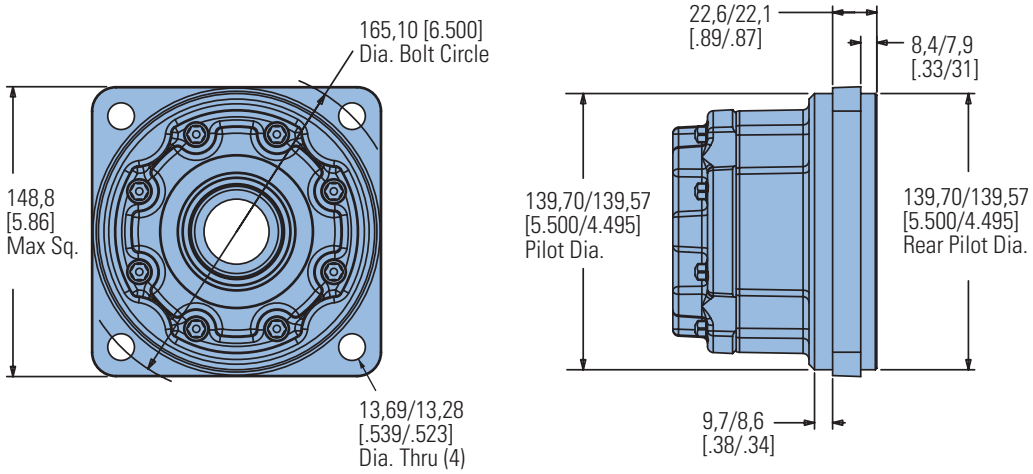

Four Bolt (Wheel Motor- Short)

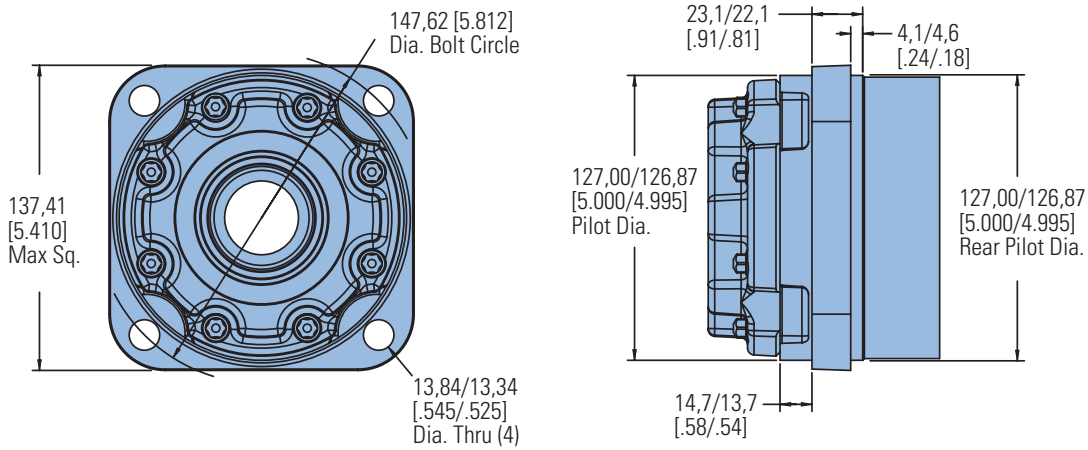

1-5/8 Inch Tapered

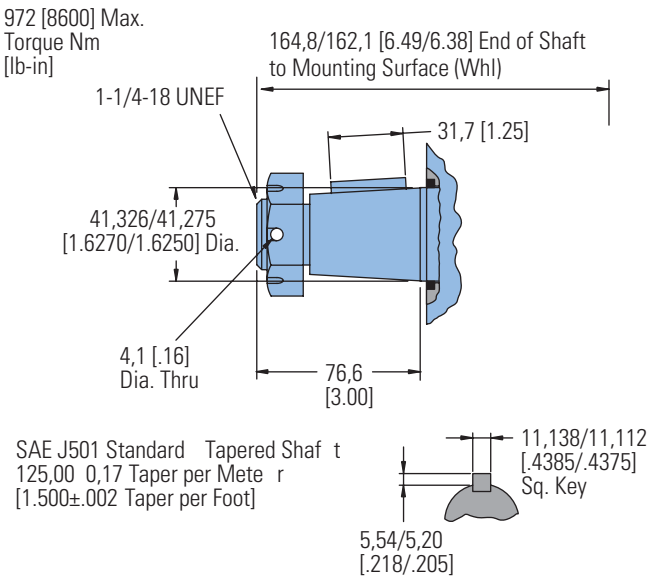

1-1/4 Inch Tapered

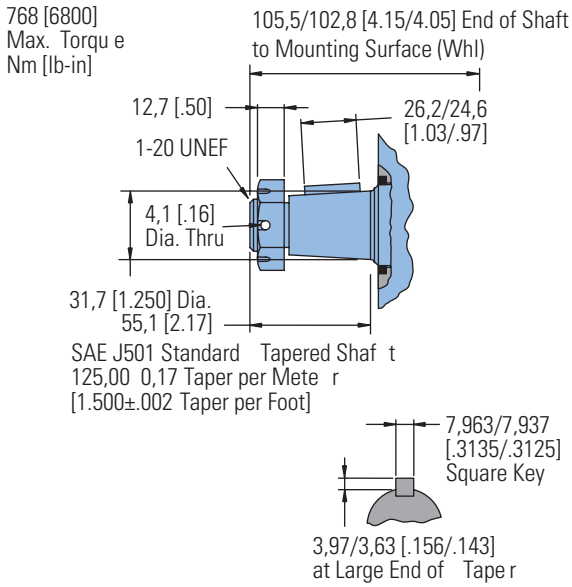

Tapered Shaft Hub Data

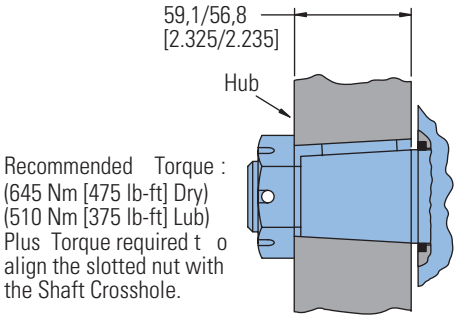

Tapered Shaft Hub Data

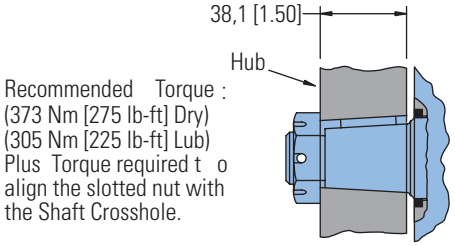

Slotted Hexagon Nut

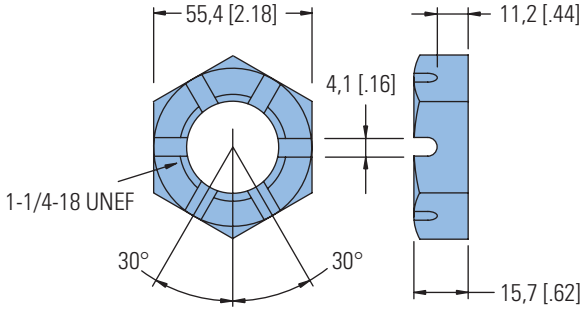

Slotted Hexagon Nut

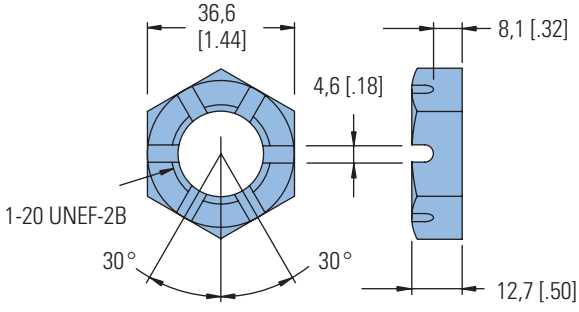

1-1/2 Inch Straight

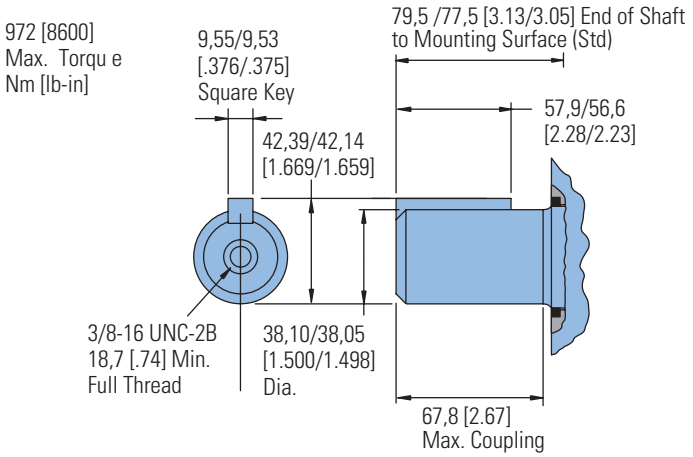

1-1/4 Inch Straight

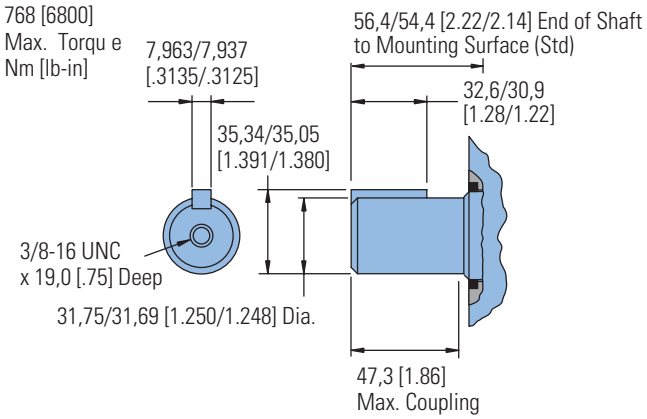

40 mm Straight

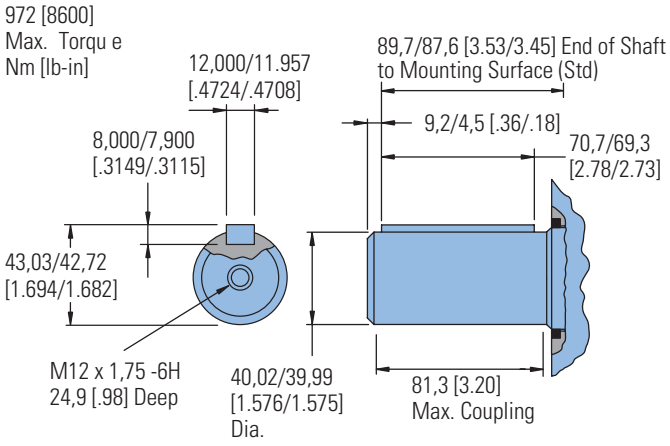

32 mm Straight

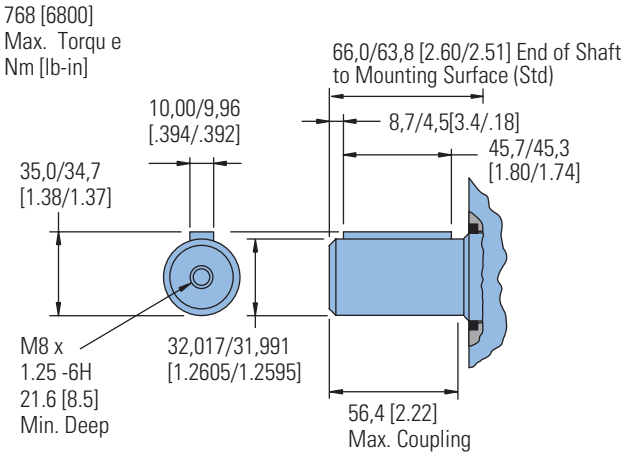

1-1/2 Inch 17 Tooth Straight

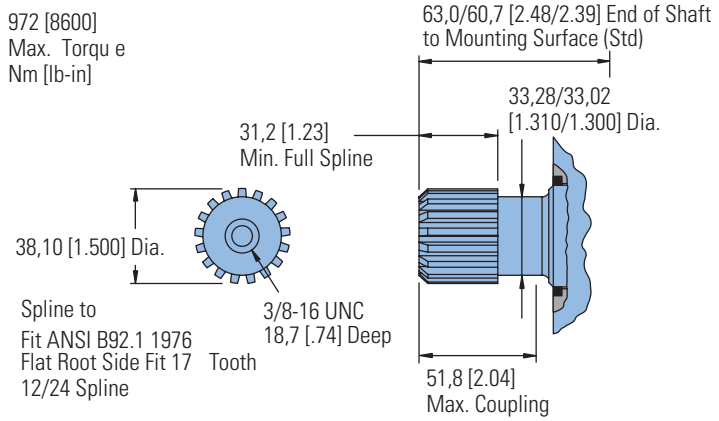

1-1/4 Inch 14 Tooth Splined

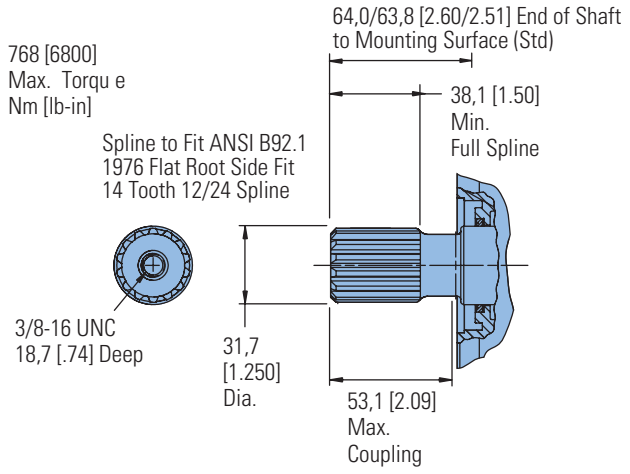

Shaft Side Load Capacity

These curves indicate the radial load capacity on the motor shafts) at various locations with an allowable external thrust load of 454 kg [1000 lb].

Note:

Case pressure will increase the allowable inward thrust load and decrease the allowable outward thrust load. Case pressure will push outward on the shaft at 94 kg/7 Bar [208 lb/100 PSI].

Each curve is based on B 10 bearing life (2000 hours of 12,000,000 shaft revolutions at 100 RPM) at rated output torque.

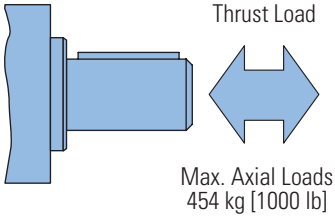

To determine radial load at speeds other than 100 RPM, multiply the load values given on the bearing curve by the factors in the chart below.

RPM	Multiplication Factor
50	**1.23**
100	1.00
200	0.81
300	0.72
400	0.66
500	0.62
600	0.58
700	0.56
800	0.54

For 3,000,000 shaft revolutions or 500 hours — Increase these shaft loads 52%.

Standard Mount- All shaft options 1-1/4 inch and larger

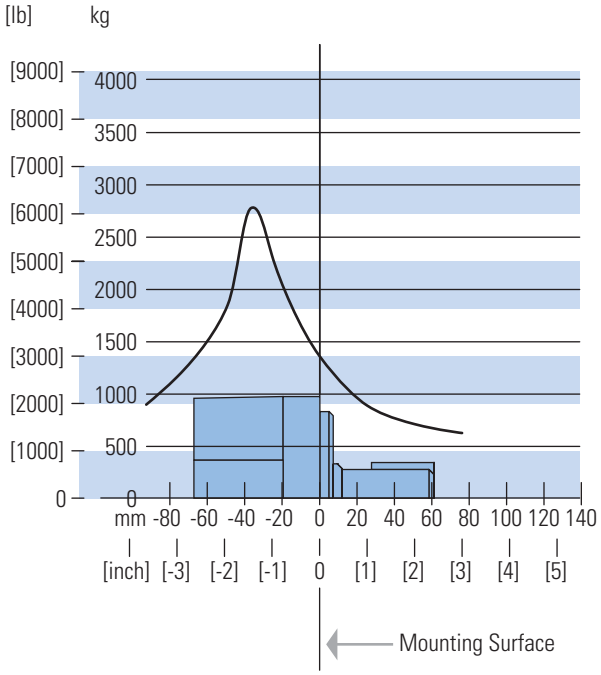

Wheel Mount- All shaft options 1-1/4 inch and larger

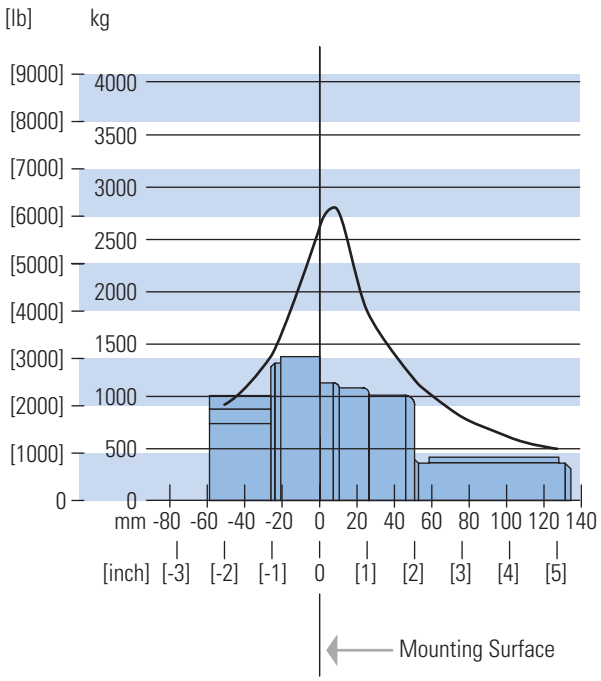

C-2

4000 Compact Series

Case Pressure and Case Port

Char-Lynn 4000 Compact Series motors are durable and have long life as long as the recommended case pressure is not exceeded. Allowable case pressure is highest at low shaft speeds. Consequently, motor life will be shortened if case pressure exceeds these ratings (acceptability may vary with application). Determine if an external case drain is required from the case pressure seal limitation charts.

Case Porting Advantage

Contamination Control — flushing the motor case.

Cooler Motor — exiting oil draws motor heat away.

Extend Motor Seal Life — maintain low case pressure with a preset restriction in the case drain line.

Case Pressure Seal Limitation

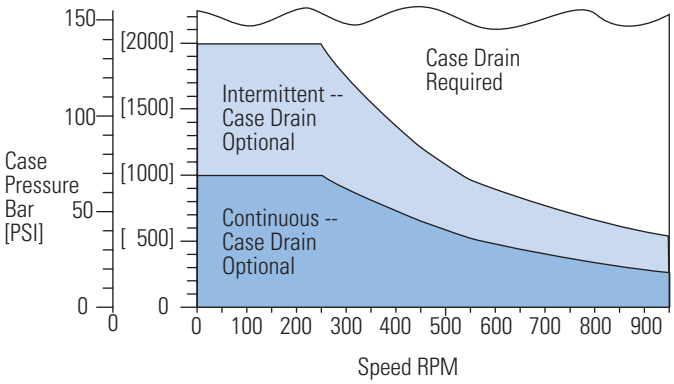

All Shaft options 1-1/4 inch and smaller.

Case Pressure Seal Limitation

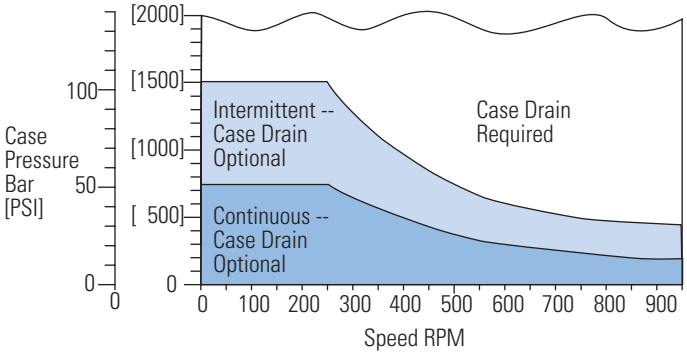

All Shaft options larger than 1-1/4 inch.

7/8-14 O-ring Ports (2) or G 1/2 (BSP) Ports (2)

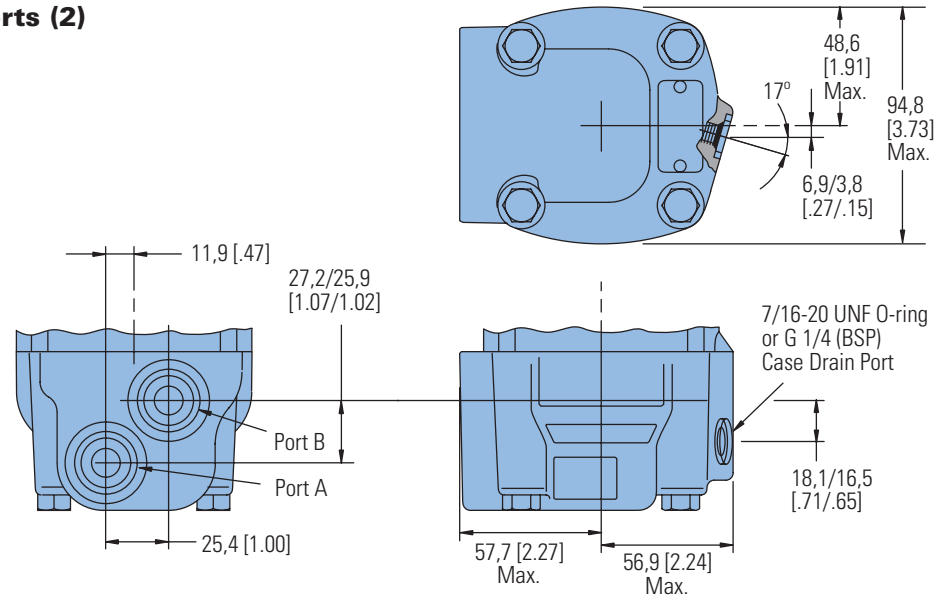

Manifold Mount

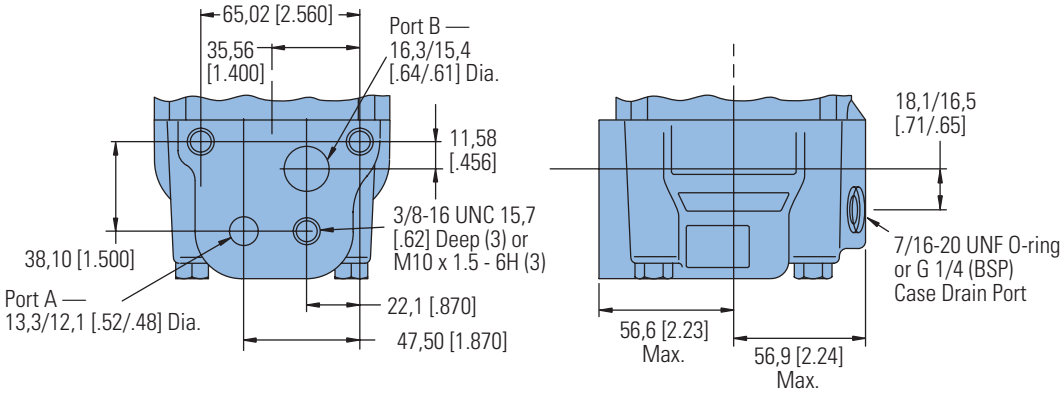

C-2

1-1/16-12 O-ring Ports (2) Positioned 180 Apart

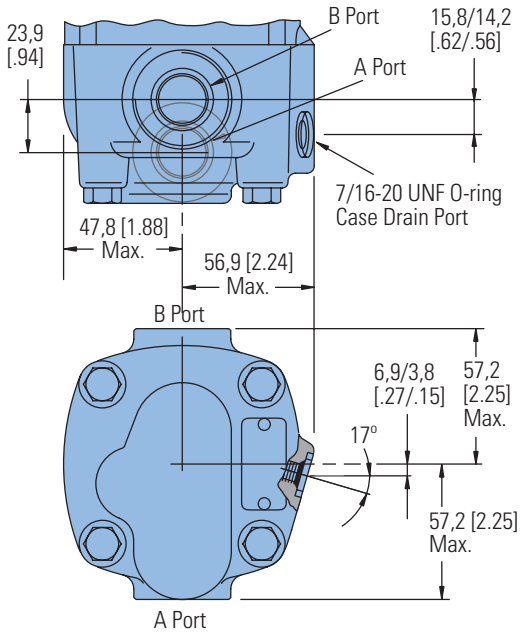

7/8-14 O-ring End Ports (2)

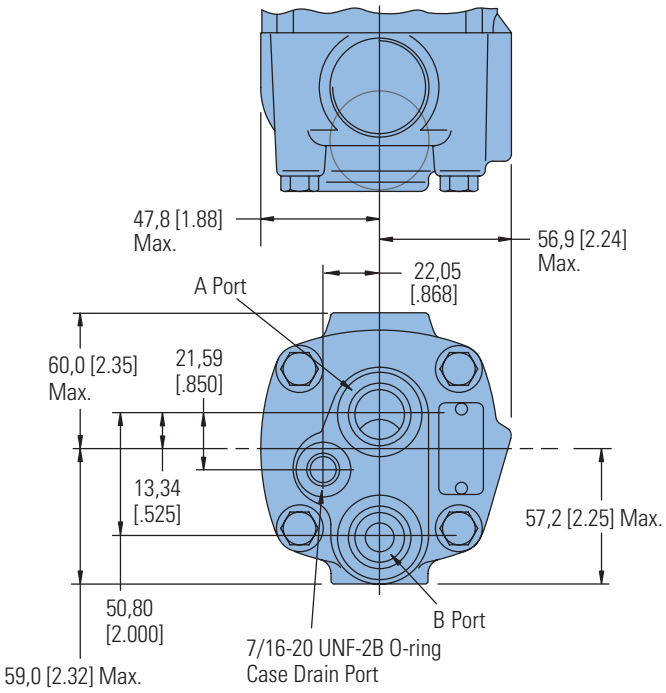

7/8-14 O-ring Ports (2) or G 1/2 (BSP) Ports (2)

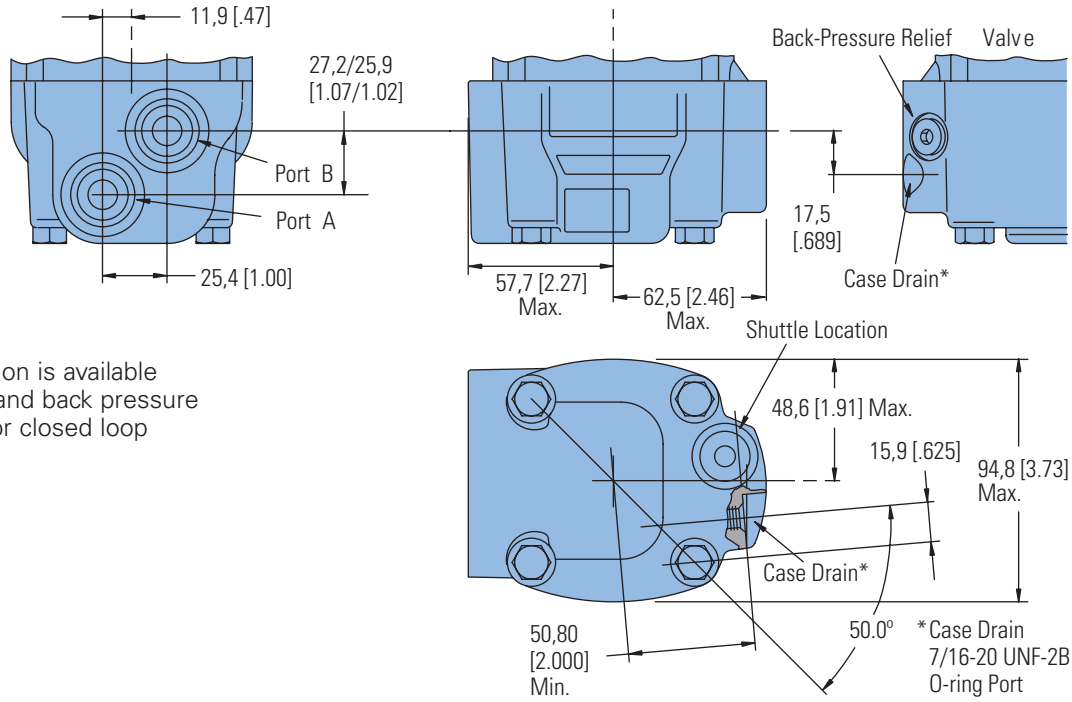

This port option is available with shuttle and back pressure relief valve for closed loop applications.

7/8-14 O-ring End Ports (2)

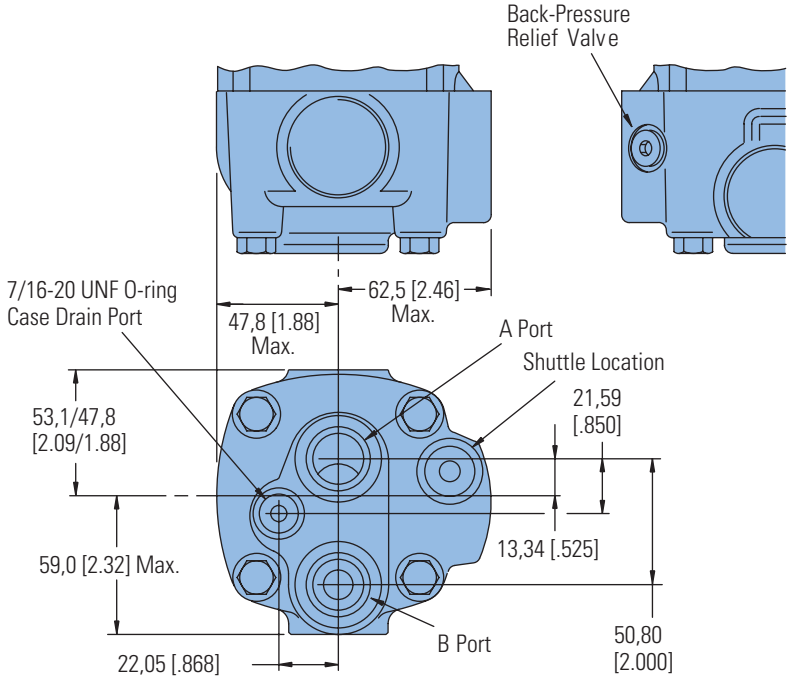

This port option is available with shuttle and back pressure relief valve for closed loop applications.

4000 Compact Series

The following 24-digit coding system has been developed to identify all of the configuration options for the 4000 Compact Series motor. Use this model code to specify a motor with the desired features. All 24 digits of the code must be present when ordering. You may want to photocopy the matrix below to ensure that each number is entered in the correct box.

Model Code

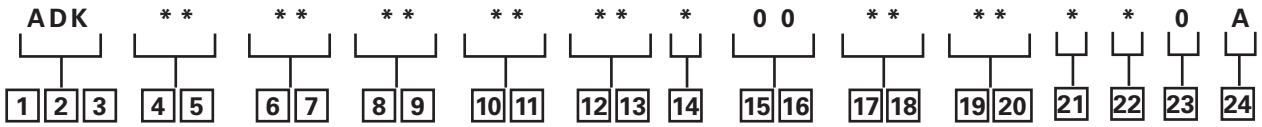

1, 2, 3 Product Series

ADK – 4000 Compact Series Motor

4, 5 Displacement cm³/r [in³/r]

10 – 160 [9.8]

12 – 200 [12.3]

15 – 250 [15.4]

20 – 325 [19.8]

25 – 405 [24.6]

30 – 490 [29.8]

6, 7 Mounting Type

AB – 4 Bolt (Wheel) 108,0 [4.25] Pilot Dia. and 13,59 [.535] Dia. Mounting Holes on 147,6 [5.81] Dia. B.C. 127,0 [5.00] Dia. Rear Mount Pilot

AC – 2 Bolt SAE A (Std.) 82,5 [3.25] Pilot Dia and 13,59 [.535] Dia. Mtg. Holes on 106,4 [4.19] Dia. B.C.

AE – 4 Bolt (Bearingless) 101,6 [4.00] Pilot Dia. and 13,59 [.535] Dia. Mounting Holes on 127,0 [5.00] Dia. B.C.

AF – 2 Bolt SAE B (Std.) 101,6 [4.00] Pilot Dia. and 14,35 [.565] Dia. Mtg. Holes on 146,0 [5.75] Dia. B.C.

AH – 4 Bolt (Standard) 82,5 [3.25] Pilot Dia. and 14,59 [.535] Dia. Mounting Holes on 106,4 [4.19] Dia. B.C.

AJ – 4 Bolt Magneto (Std.) 82,6 [3.25] Pilot Dia. and 13,59 [.535] Dia. Mtg. Holes on 106,4 [4.19] Dia. B.C. 2,79 [.110] Pilot Length

AP – 4 Bolt (wheel compatible for Hayes Brake) 107,9 [4.25] Pilot Dia. and 13,59 [.535] Dia. Mounting Holes on 147,6 [5.81] Dia. B.C. with Turned Down Housing to 88,9 [3.50] Dia.

AG – 4 Bolt (Wheel - Short) 91.9 [3.62] Pilot Dia. 14.35 [.565] Dia. Holes on 147.6 [5.81] Dia. Bolt Circle with O-ring Groove

AT – 2 Bolt (Standard) 101.6 [4.00] Pilot Dia. 13.59 [.535] Dia. Holes on 146.0 [5.75] Dia. Bolt Circle (Similar to SAE B)

BB* – 4 Bolt (SAE B) (Standard) 101,6 [4.00] Pilot Dia. and 14,7 [.58] Dia. Mounting Slots on 127,0 [5.00] Dia. Bolt Circle

BE* – 4 Bolt (Wheel) 139,7 [5.50] Front and Rear Pilot Dia. and 13,49 [.531] Dia. Mounting Holes on 165,1 [6.50] Dia. Bolt Circle

BG* – 4 Bolt (Wheel-Short) 127,0 [5.00] Front and Rear Pilot Dia. and 13,59 [.535] Dia. Mounting Holes on 147,62 [5.812] Dia. Bolt Circle

8, 9 Output Shaft

00 – None (Bearingless)

02 – 1 1/4 inch Dia. Straight with 3/8 -16 Thread in end, 7,938 [.3125] Sq. x 31,75 [1.250] Straight Key

03 – 1 1/4 inch Dia. .125 : 1 Tapered Shaft Per SAE J501 with 1-20 UNEF -2A Threaded Shaft end, and slotted Hex Nut, 7,938 [.3125] Sq. x 25,40 [1.000] Straight Key

04 – 31.75 [1.250] Dia. Flat Root Side Fit, 14 tooth, 12/24 DP 30° Involute Spline with .375-16 UNC-2B Thread in End, 33.0 [1.30] Minimum Full Spline Length

06 – 1 1/4 inch Dia. Splined 14T with 38,1 [1.50] Min. Full Spline Length and 53,1 [2.09] Max. Coupling Length

08 – 40 mm Dia. Straight (with Straight Key) M12 x 1,75 - 6H Thread in end

10 – 32 mm dia. Straight (with Straight Key) M8 x 1,25 -6H Thread in end, and 56,4 [2.22] Max. Coupling Length

11 – 1 1/2 inch Dia. Straight (with Straight Key) 3/8 -16 Thread in end

17 – 28.22 [1.111] Dia. Flat Root Side Fit, 17 Tooth, 16/32 DP 30° Involute Spline, 28.58 [1.125] Minimum Full Spline Length

98 – 1 5/8 inch Dia. Tapered with Straight Key and 1 1/4 -18 UNEF Slotted Hex. Nut

99 – 1 1/2 inch Dia. Splined 17T with 31,2 [1.23] Min. Full Spline Length

10, 11 Ports

AA – 7/8 -14 UNF –2B SAE O-ring (Staggered)

AB – 12,70 [.500] and 15,88 [.625] Dia. Ports (Manifold) and 3x 3/8 -16 UNC Port Block Mounting Holes

AD – 7/8 -14 UNF –2B SAE O-ring (End Ports)

AE – 12,70 [.500] and 15,88 [.625] Dia. Ports (Manifold) and 3 x M10 x 1,5-6H Port Block Mounting Holes

AG – G 1/2 BSP Straight Thread ports (Staggered)

AH – 1 1/16 - 12 UN-2B O-Ring ports (Positioned 180° Apart)

AJ – .750-16 UNF-2B SAE O-ring Ports – Ports Oriented 180° to each other

BA– .875-14 UNF-2B SAE O-ring Ports – Port B Recessed 11.4 [.45] from Port A – End Ports – Cast Boss Removed

12, 13 Case Flow Options

00 – None

01 – 7/16 -20 UNF –2B SAE O-ring Port (Case Drain)

02 – G 1/4 (BSP) Straight Thread Port (Case Drain)

* These mounting options are available with shaft options 08, 11, 98 and 99.

14 – Reverse Flow Shuttle Valve with G 1/4 (BSP) Straight Thread Port (Case Drain)

14 Back-Pressure Relief Valve

0 – None

A – Set at 4,5 bar [65 PSI] (for Manual Pumps)

15, 16 Valve Options

00 – None

17, 18 Accessories

00 – None

AA – Seal Guard

AF – M12 Threaded Connector Digital Speed Sensor (Two 30 Pulse per rev. signals in quadrature)

AG – M12 Threaded Connector Digital Speed Sensor (One 60 Pulse per rev. speed signal and one directional signal)

19, 20 Special Features (Hardware)

00 – None

01 – Viton Seals

21 Special Features (Assembly)

0 – None

A – Flange Rotated 90°

B – Reverse Rotation

22 Paint/ Special Packaging

0 – No Paint, Individual Box

A – Low Gloss Black Primer, Individual Box

23 Eaton Assigned Code when Applicable

0 – None

24 Eaton Assigned Design Code

A – First Code

Feature in **bold** are preferred and allow for shorter lead time.

Delta Series

Highlights



Description

This wheel motor is the latest addition to the Char Lynn product line. The Delta motor provides torques up to 11,500 in-lbs. Eaton has packed this motor with many "best in class" features: the optimized geroler profile ensures smooth operation; the disc valve technology has the best performance and the bearing capacity is the highest in the industry for very demanding applications.

Delta Series

Geroler Element	12 Displacements
Flow l/min [GPM]	75 [20] Continuous**
	115 [30] Intermittent*
Speed RPM	670 Cont.**
	837 Inter.*
Pressure bar [PSI]	200 [3000] Cont.**
	275 [4000] Inter.*
Torque Nm [lb-in]	1015 [9000] Cont**.
	1185 [10500] Inter.*

** Continuous— (Cont.) Continuous rating, motor may be run continuously at these ratings.
* Intermittent— (Inter.) Intermittent operation, 10% of every minute.

Features:

- Excellent reliability with time proven Char-Lynn components
- Proven disc valve technology with the highest efficiencies in its class
- Leak resistant motor with the front bearing protecting the shaft seal
- Torque up to 10,500 lb-in intermittant duty / Flow up to 30 GPM intermittant
- 12 displacements available from 6.9 to 46 CID
- Shaft sizes up to 1-5/8 inch
- 3-1/4 inch front pilot and 5 inch rear pilot
- STC ports available

Benefits:

- Perfect replacement for Parker® TF-TG and White™ RE motors
- Lowest no load pressure drop which leads to longer life and lower temperature operation
- Highest overall efficiency: more available HP to the system than competitive motors
- The highest side load capacity with 4,500 lbs at 3" from the mount face

Applications:

- Scissor Lift
- Boom Lift
- Industrial Sweeper
- Mower

Parker is a registered trademark of Parker Intangibles LLC.

White is a trademark of White Drive Products, Inc.



Boom Lift



Sweeper



Mower

Delta Series

Specifications

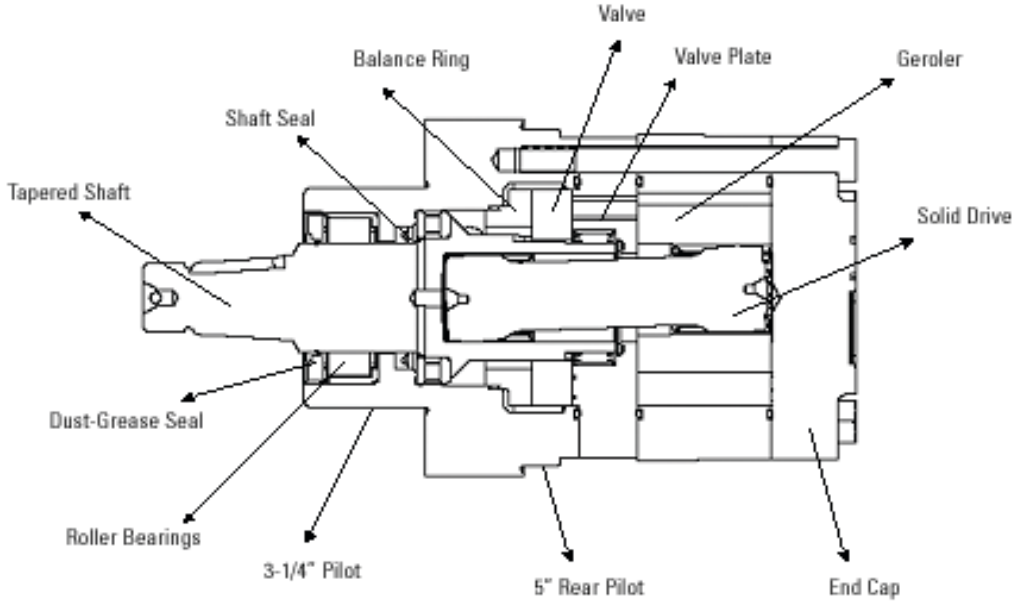

DELTA SERIES MOTORS

Displ. cm³/r (in³/rev)		113 [6.9]	146 [8.9]	198 [12.1]	234 [14.3]	252 [15.4]	300 [18.3]	347 [21.2]	395 [24.1]	470 [28.7]	542 [33.1]	649 [39.6]	754 [46.0]
Max Speed (RPM) @Flow	Continuous	668	519	382	323	300	252	218	192	161	140	117	100
	Intermittent	831	778	516	485	450	379	327	288	241	209	175	151
Flow l/min [GPM]	Continuous	75 [20]	75 [20]	75 [20]	75 [20]	75 [20]	75 [20]	75 [20]	75 [20]	75 [20]	75 [20]	75 [20]	75 [20]
	Intermittent	95 [25]	115 [30]	115 [30]	115 [30]	115 [30]	115 [30]	115 [30]	115 [30]	115 [30]	115 [30]	115 [30]	115 [30]
Torque 1028 [9102] [10698]	Continuous	320 [2834]	429 [3800]		554 [4904]		651 [5763]	712 [6311]	844 [7472]	933 [8260]	972 [8607]	1039 [9199]	994 [8809]
	985 [8721]	Nm [lb-in]	Intermittent			417 [3697]		563 [4984]	725 [6421]	852 [7543]	930 [8236]	1087 [9629]	1208
	1206 [10684]	1222 [10824]		1202 [10644]		1253 [11100]		1232 [10910]					
Pressure 120 [1750] 240 [3500]	Continuous	205 [3000]	205 [3000]		205 [3000]		205 [3000]	205 [3000]	205 [3000]	205 [3000]	190 [2750]	170 [2500]	140 [2000]
	105 [1500]	Δ bar [Δ PSI]		Intermittent		275 [4000]		275 [4000]	275 [4000]	275 [4000]	275 [4000]	275 [4000]	275 [4000]
	205 [3000]	170 [2500]	155 [2250]	140 [2000]									
Weight 19,1 [42.0]	kg [lb]	12,7 [28.0]	12,9 [28.5]	13,8 [30.5]	14,3 [31.5]	15,0 [33.0]		15,0 [33.0]	15,4 [34.0]	16,1 [35.5]	16,8 [37.0]	17,5 [38.5]	18,4 [40.5]

Note:

Top assure best motor life, run motor for approximately one hour at 30% of rated pressure belore application to full load. Be sure motor is filled with fluid prior to any load applications.

When pressurizing B port, all displacements have a continuous rating of 2000 psi.

Maximum Inlet Pressure:

310 bars (4500 PSI)

Do not exeed Δ pressure rating (see chart above).

Recommended Fluids:

Premium quality, anti wear type hydrauli coil with a viscosity of no less than 70 SUS at operating temperature.

Recommended System Operating Temp.:

-34°C to 82°C [-30°F to 180°F]

Recommended Filtration:

Per ISO cleanliness Code 4406: 20/18/13

Delta Series

Performance Data

Motors run with high efficiency in all areas designated with a number for torque and speed. For best motor life select a motor to run with a torque and speed range shown in the light shaded area.

Performance data is typical at 120 SUS. Actual data may vary slightly from unit to unit in production.

Continuous

Intermittent

No operation

113cm³/r [6.9 in³/r]

Δ Pressure Bar [PSI]

Flow LPM [GPM]

	17 250	34 500	52 750	69 1000	86 1250	103 1500	121 1750	138 2000	155 2250	172 2500	190 2750	207 3000	224 3250	241 3500	259 3750	276 4000
2	204	450	686	915	1140	1355	1593	1814	2018	2197	2349	2573	2776	2975	3182	3362
	23	51	77	103	129	153	180	205	228	248	265	290	313	336	359	380
7.6	65	64	63	62	60	60	59	57	56	55	56	54	52	48	49	44
4	210	457	706	950	1194	1436	1677	1906	2129	2351	2571	2790	3010	3231	3454	3660
	24	52	80	107	135	162	189	215	240	265	290	315	340	365	390	413
15	132	131	130	129	128	127	126	125	123	122	120	118	115	113	112	110
6	196	445	696	942	1186	1432	1674	1914	2144	2367	2587	2805	3027	3252	3476	3695
	22	50	79	106	134	162	189	216	242	267	292	317	342	367	392	417
23	199	196	196	195	193	192	191	190	189	185	183	182	180	177	174	172
8	176	425	677	921	1168	1420	1666	1906	2152	2386	2616	2834	3051	3265	3481	3697
	20	48	76	104	132	160	188	215	243	269	295	320	344	369	393	417
30	266	264	263	261	261	259	257	257	255	252	250	248	246	244	241	237
10	160	407	659	901	1149	1398	1650	1894	2134	2370	2601	2823	3044	3258	3457	3654
	18	46	74	102	130	158	186	214	241	268	294	319	344	368	390	413
38	333	333	329	326	324	323	321	320	318	314	312	309	306	303	301	295
12	134	382	632	876	1122	1372	1621	1868	2111	2353	2589	2821	3046	3270	3479	3680
	15	43	71	99	127	155	183	211	238	266	292	319	344	369	393	415
45	399	398	396	393	392	389	387	386	383	381	377	374	372	370	367	364
14	111	357	608	855	1102	1350	1599	1847	2090	2330	2569	2800	3024	3250	3455	3614
	13	40	69	97	124	152	181	208	236	263	290	316	341	367	390	408
53	466	465	462	460	457	455	453	451	449	446	442	438	436	433	429	415
16	81	325	577	822	1071	1321	1572	1817	2063	2307	2549	2781	3011	3237	3436	3578
	9	37	65	93	121	149	177	205	233	260	288	314	340	365	388	404
61	533	532	529	527	524	522	520	517	516	513	509	506	503	500	496	477
18	48	295	543	790	1036	1283	1535	1781	2027	2271	2512	2751	2984	3214	3431	3597
	5	33	61	89	117	145	173	201	229	256	284	311	337	363	387	406
68	601	600	597	593	591	587	586	583	581	577	573	570	568	564	559	542
20	14	263	510	758	1005	1249	1499	1746	1988	2231	2474	2712	2945	3176	3395	3597
	2	30	58	86	113	141	169	197	224	252	279	306	332	359	383	406
76	668	666	664	661	658	654	652	649	646	644	640	637	634	630	628	621
22		228	477	725	972	1218	1468	1712	1957	2201	2447	2686	2917	3149	3350	3523
		26	54	82	110	138	166	193	221	249	276	303	329	355	378	398
83		733	731	728	724	721	718	715	713	710	705	704	700	697	688	664
25		170	416	663	913	1153	1402	1646	1891	2136	2382	2622	2856	3081	3273	3452
		19	47	75	103	130	158	186	214	241	269	296	322	348	369	390
95		831	829	827	825	821	818	815	812	809	805	803	800	794	776	745
30		114	429	755	1076	1400	1725	2047	2368	2687	3003	3323	3635	3942	4249	4552
		13	48	85	122	158	195	231	267	303	339	375	410	445	480	514
114		778	777	773	770	765	759	756	753	749	746	744	742	740	737	735

114 Torque [lb-in]
13 } Nm
778 Speed RPM

146cm³/r [8.9 in³/r]

ΔPressure Bar [PSI]

Flow LPM [GPM]

	17 250	34 500	52 750	69 1000	86 1250	103 1500	121 1750	138 2000	155 2250	172 2500	190 2750	207 3000	224 3250	241 3500	259 3750	276 4000
2	288	596	907	1184	1445	1718	1992	2247	2537	2810	3039	3290	3595	3846	3996	4265
	32	67	102	134	163	194	225	254	286	317	343	371	406	434	451	482
7.6	50	48	46	42	44	43	40	39	38	37	36	34	32	31	25	28
4	289	619	947	1267	1593	1914	2227	2482	2755	3042	3295	3615	3916	4135	4456	4680
	33	70	107	143	180	216	251	280	311	343	372	408	442	467	503	528
15	102	100	98	96	95	95	94	93	91	88	84	81	79	76	74	70
6	275	604	934	1259	1588	1908	2232	2552	2869	3181	3497	3800	4102	4397	4680	4955
	31	68	105	142	179	215	252	288	324	359	395	429	463	496	528	559
23	154	151	149	148	146	145	144	143	141	137	135	133	130	128	125	123
8	256	580	909	1235	1566	1887	2209	2528	2845	3160	3475	3783	4091	4397	4692	4984
	29	66	103	139	177	213	249	285	321	357	392	427	462	496	530	563
30	206	204	201	200	198	198	196	195	190	187	185	182	179	179	176	173
10	227	553	879	1204	1535	1861	2184	2504	2820	3133	3447	3757	4061	4369	4667	4963
	26	62	99	136	173	210	247	283	318	354	389	424	459	493	527	560
38	258	256	253	251	250	249	248	246	241	238	236	233	231	229	228	225
12	199	521	850	1172	1501	1825	2148	2469	2780	3091	3402	3714	4017	4324	4627	4922
	23	59	96	132	170	206	243	279	314	349	384	419	454	488	522	556
45	310	308	305	303	301	300	299	297	292	290	287	284	282	281	278	276
14	157	480	809	1130	1458	1784	2104	2426	2743	3057	3369	3679	3983	4291	4593	4892
	18	54	91	128	165	201	238	274	310	345	380	415	450	484	519	552
53	362	360	356	354	353	352	351	346	344	341	339	337	335	332	331	329
16	132	457	780	1102	1429	1753	2081	2397	2714	3025	3335	3645	3947	4255	4558	4857
	15	52	88	124	161	198	235	271	306	342	377	412	446	480	515	548
61	414	412	408	406	405	403	402	398	395	392	389	387	384	382	380	377
18	98	414	742	1065	1390	1715	2039	2360	2675	2986	3295	3605	3906	4213	4518	4817
	11	47	84	120	157	194	230	266	302	337	372	407	441	476	510	544
68	467	465	461	459	457	456	453	450	447	444	442	439	437	435	432	430
20	42	373	700	1020	1347	1670	1989	2308	2628	2944	3255	3568	3866	4172	4475	4774
	5	42	79	115	152	189	225	261	297	332	368	403	436	471	505	539
76	519	517	514	511	509	507	503	500	498	495	492	489	488	485	484	482
22	16	328	659	978	1306	1628	1950	2268	2586	2900	3211	3522	3823	4128	4429	4732
	2	37	74	110	147	184	220	256	292	327	362	398	432	466	500	534
83	571	569	565	562	559	559	555	552	549	546	544	541	538	536	534	531
25		253	576	899	1221	1544	1864	2179	2500	2811	3120	3433	3736	4036	4337	4639
		29	65	102	138	174	210	246	282	317	352	388	422	456	490	524
95		647	645	641	639	637	633	629	626	624	621	618	616	613	612	609
30		114	429	755	1076	1400	1725	2047	2368	2687	3003	3323	3635	3942	4249	4552
		13	48	85	122	158	195	231	267	303	339	375	410	445	480	514
114		778	777	773	770	765	759	756	753	749	746	744	742	740	737	735

Delta Series

Performance Data

198cm³/r [12.1 in³/r]
ΔPressure Bar [PSI]

Flow LPM [GPM]

	17 250	34 500	52 750	69 1000	86 1250	103 1500	121 1750	138 2000	155 2250	172 2500	190 2750	207 3000	224 3250	241 3500	259 3750	276 4000
2	313	732	1113	1480	1870	2249	2668	3059	3447	3822	4189	4544	4875	5194	5508	5948
	35	83	126	167	211	254	301	345	389	432	473	513	550	586	622	671
7.6	36	35	34	32	31	30	29	27	27	26	24	22	21	18	17	18
4	367	809	1228	1640	2038	2437	2844	3234	3623	4010	4398	4779	5164	5545	5917	6275
	41	91	139	185	230	275	321	365	409	453	497	540	583	626	668	708
15	75	74	72	71	69	68	67	65	63	62	61	58	56	56	54	52
6	365	799	1231	1654	2066	2473	2878	3270	3665	4056	4446	4833	5215	5598	5975	6347
	41	90	139	187	233	279	325	369	414	458	502	546	589	632	675	717
23	112	111	110	109	107	106	104	102	101	99	98	96	95	93	91	89
8	343	782	1219	1648	2069	2484	2898	3300	3702	4093	4482	4865	5237	5607	5976	6349
	39	88	138	186	234	280	327	373	418	462	506	549	591	633	675	717
30	151	150	149	147	146	145	143	142	140	138	135	134	133	131	129	127
10	322	759	1201	1633	2063	2483	2904	3316	3726	4125	4515	4904	5290	5672	6048	6421
	36	86	136	184	233	280	328	374	421	466	510	554	597	640	683	725
38	190	188	187	186	185	182	181	178	177	174	173	171	169	168	166	164
12	283	719	1158	1590	2020	2448	2868	3279	3691	4096	4492	4883	5265	5644	6015	6385
	32	81	131	180	228	276	324	370	417	462	507	551	594	637	679	721
45	229	227	226	224	223	221	220	218	216	215	212	211	209	206	205	202
14	238	671	1110	1538	1970	2396	2816	3228	3644	4050	4451	4846	5231	5613	5982	6357
	27	76	125	174	222	271	318	364	411	457	503	547	591	634	675	718
53	267	266	264	262	261	259	257	255	253	251	249	246	244	242	240	238
16	191	625	1063	1493	1923	2345	2768	3182	3596	4003	4403	4801	5191	5576	5947	6316
	22	71	120	169	217	265	312	359	406	452	497	542	586	630	671	713
61	305	304	303	301	300	298	296	295	293	291	289	287	285	284	281	279
18	139	567	1006	1438	1871	2299	2720	3133	3547	3956	4359	4760	5128	5492	5871	6247
	16	64	114	162	211	260	307	354	400	447	492	537	579	620	663	705
68	342	341	340	339	337	335	333	331	330	328	326	324	322	321	319	317
20	99	457	886	1315	1745	2168	2590	3006	3418	3822	4224	4622	5018	5418	5816	6208
	11	52	100	148	197	245	292	339	386	432	477	522	567	612	657	701
76	382	380	378	377	375	373	371	369	366	364	362	359	358	356	354	352
22	15	383	810	1243	1676	2096	2520	2938	3351	3759	4161	4558	4953	5339	5722	6095
	2	43	91	140	189	237	284	332	378	424	470	515	559	603	646	688
83	420	417	416	415	413	411	409	407	405	403	401	399	397	395	392	390
25		272	700	1131	1559	1985	2408	2823	3231	3639	4042	4443	4842	5229	5617	5992
		31	79	128	176	224	272	319	365	411	456	502	547	590	634	677
95		476	475	474	472	470	468	466	465	463	461	459	457	455	453	450
30		163	600	1037	1474	1902	2315	2723	3134	3536	3933	4338	4737	5125	5516	5899
		18	68	117	166	215	261	307	354	399	444	490	535	579	623	666
114		516	506	494	487	484	488	494	501	506	511	514	515	516	515	514

163 Torque lb-in
18 Nm
516 Speed RPM

234cm³/r [14.3 in³/r]
ΔPressure Bar [PSI]

Flow LPM [GPM]

	17 250	34 500	52 750	69 1000	86 1250	103 1500	121 1750	138 2000	155 2250	172 2500	190 2750	207 3000	224 3250	241 3500	259 3750	276 4000
2	470	971	1457	1921	2414	2877	3348	3821	4275	4730	5164	5630	5997	6446	6863	7217
	53	110	164	217	273	325	378	431	483	534	583	636	677	728	775	815
7.6	31	30	29	28	26	25	25	25	24	23	22	21	19	20	19	15
4	468	988	1504	1989	2482	2964	3447	3916	4384	4843	5302	5763	6213	6668	7113	7543
	53	112	170	225	280	335	389	442	495	547	599	651	701	753	803	852
15	64	62	61	60	59	58	57	56	56	55	55	54	52	51	50	48
6	449	966	1484	1980	2470	2953	3445	3922	4397	4851	5304	5750	6197	6643	7085	7524
	51	109	168	224	279	333	389	443	496	548	599	649	700	750	800	849
23	96	95	93	92	92	91	90	89	88	88	88	87	86	86	84	83
8	416	931	1446	1954	2458	2948	3438	3909	4381	4835	5280	5714	6150	6584	7015	7445
	47	105	163	221	277	333	388	441	495	546	596	645	694	743	792	841
30	129	128	126	125	124	123	123	121	121	120	120	119	119	118	117	116
10	380	896	1410	1917	2425	2919	3412	3890	4373	4831	5280	5716	6148	6586	7017	7452
	43	101	159	216	274	330	385	439	494	545	596	645	694	744	792	841
38	161	160	158	157	156	155	154	153	153	152	151	150	149	148	147	146
12	341	856	1366	1876	2384	2880	3370	3843	4319	4782	5229	5665	6102	6537	6962	7392
	39	97	154	212	269	325	380	434	488	540	590	640	689	738	786	835
45	194	193	191	190	189	188	187	186	185	185	184	183	182	181	180	178
14	290	804	1312	1813	2320	2821	3315	3793	4268	4732	5181	5623	6057	6485	6907	7327
	33	91	148	205	262	318	374	428	482	534	585	635	684	732	780	827
53	226	225	224	222	221	220	219	218	217	216	216	215	214	212	211	209
16	239	743	1249	1756	2264	2759	3255	3735	4207	4669	5122	5568	6004	6432	6845	7268
	27	84	141	198	256	312	367	422	475	527	578	629	678	726	773	820
61	258	258	257	255	254	253	252	251	251	250	249	247	246	245	244	242
18	176	688	1187	1694	2203	2698	3195	3676	4146	4603	5055	5497	5930	6358	6774	7194
	20	78	134	191	249	305	361	415	468	520	571	621	669	718	765	812
68	291	291	289	287	286	285	284	283	282	281	279	278	277	276	276	275
20	108	614	1121	1623	2124	2620	3118	3603	4077	4541	4990	5430	5865	6301	6720	7139
	12	69	127	183	240	296	352	407	460	513	563	613	662	711	759	806
76	323	323	322	320	319	317	317	316	314	312	311	310	310	310	309	309
22	28	535	1081	1582	2082	2579	3071	3550	4018	4483	4943	5406	5855	6300	6723	7139
	3	60	122	179	235	291	347	401	454	506	558	610	661	711	759	806
83	355	355	355	352	351	350	349	348	345	343	342	341	341	341	341	341
25		410	956	1460	1959	2454	2941	3419	3892	4356	4806	5251	5683	6117	6531	6939
		46	108	165	221	277	332	386	439	492	543	593	642	691	737	783
95		404	404	402	401	399	398	397	394	392	391	390	390	389	390	389
30		171	700	1297	1735	2226	2718	3204	3689	4162	4623	5079	5519	5959	6377	6781
		19	79	146	196	251	307	362	417	470	522	573	623	673	720	766
114		485	485	485	483	481	480	478	476	474	472	472	471	471	471	471

Delta Series

Performance Data

252cm³/r [15.4 in³/r]
ΔPressure Bar [PSI]

Flow LPM [GPM]

	17 250	34 500	52 750	69 1000	86 1250	103 1500	121 1750	138 2000	155 2250	172 2500	190 2750	207 3000	224 3250	241 3500	259 3750	276 4000
2	485	1011	1520	2032	2564	3059	3569	4065	4561	5085	5589	6054	6536	6891	7388	7872
	55	114	172	229	289	345	403	459	515	574	631	683	738	778	834	889
7.6	28	27	26	26	25	24	23	23	22	23	23	22	22	19	19	20
4	504	1062	1609	2145	2684	3213	3744	4263	4780	5294	5804	6311	6811	7308	7787	8236
	57	120	182	242	303	363	423	481	540	598	655	712	769	825	879	930
15	59	57	56	56	55	55	54	54	53	53	53	51	51	49	49	47
6	478	1031	1585	2132	2670	3195	3717	4222	4726	5222	5721	6211	6700	7179	7658	8118
	54	116	179	241	301	361	420	477	534	590	646	701	756	810	865	917
23	89	88	86	85	85	84	84	84	84	84	83	82	82	80	78	78
8	453	1012	1571	2115	2664	3191	3717	4224	4725	5215	5706	6194	6678	7161	7628	8076
	51	114	177	239	301	360	420	477	533	589	644	699	754	808	861	912
30	120	118	117	115	114	113	113	112	113	113	113	112	111	110	109	108
10	398	957	1516	2063	2609	3137	3668	4181	4678	5157	5636	6116	6589	7059	7522	7974
	45	108	171	233	295	354	414	472	528	582	636	690	744	797	849	900
38	149	148	147	145	144	143	142	142	142	143	142	142	141	140	139	138
12	370	914	1468	2011	2557	3085	3614	4125	4622	5102	5577	6059	6538	7017	7497	7966
	42	103	166	227	289	348	408	466	522	576	630	684	738	792	846	899
45	180	179	178	176	174	173	172	172	172	172	172	172	171	171	170	169
14	290	842	1399	1948	2496	3024	3552	4065	4571	5056	5525	5987	6445	6905	7359	7813
	33	95	158	220	282	341	401	459	516	571	624	676	728	780	831	882
53	210	209	208	206	205	203	202	201	200	199	199	200	200	200	200	199
16	239	795	1346	1891	2434	2962	3494	4003	4511	4995	5461	5919	6382	6841	7292	7743
	27	90	152	213	275	334	395	452	509	564	616	668	720	772	823	874
61	240	240	238	237	235	233	232	231	229	228	229	230	230	230	230	230
18	157	716	1265	1810	2355	2881	3408	3921	4431	4924	5401	5860	6310	6749	7184	7627
	18	81	143	204	266	325	385	443	500	556	610	662	712	762	811	861
68	270	270	269	267	265	264	261	261	258	256	256	258	259	260	260	260
20	96	650	1203	1750	2294	2820	3345	3857	4366	4865	5340	5801	6242	6686	7122	7553
	11	73	136	198	259	318	378	435	493	549	603	655	705	755	804	853
76	300	300	299	297	295	293	292	289	287	286	286	287	289	290	291	290
22	26	569	1111	1656	2195	2725	3250	3763	4268	4769	5259	5733	6182	6609	7030	7459
	3	64	125	187	248	308	367	425	482	538	594	647	698	746	794	842
83	330	330	330	328	327	324	322	320	316	314	313	314	316	318	320	320
25		425	967	1508	2042	2574	3093	3605	4110	4602	5084	5561	6028	6482	6899	7316
		48	109	170	231	291	349	407	464	520	574	628	681	732	779	826
95		375	375	374	372	369	366	364	361	358	357	356	358	361	364	364
30		179	723	1266	1800	2330	2852	3364	3868	4368	4856	5338	5811	6269	6701	7096
		20	82	143	203	263	322	380	437	493	548	603	656	708	757	801
114		450	450	450	449	447	443	439	436	433	430	430	431	434	437	438

179 } Torque lb-in
20 } Nm
450 } Speed RPM

300cm³/r [18.3 in³/r]
ΔPressure Bar [PSI]

Flow LPM [GPM]

	17 250	34 500	52 750	69 1000	86 1250	103 1500	121 1750	138 2000	155 2250	172 2500	190 2750	207 3000	224 3250	241 3500	259 3750	276 4000
2	608	1257	1919	2553	3196	3824	4475	5087	5707	6307	6901	7472	8015	8484	8962	9413
	69	142	217	288	361	432	505	574	644	712	779	844	905	958	1012	1063
7.6	24	23	23	22	21	21	21	20	19	18	17	16	15	13	11	11
4	612	1283	1940	2587	3227	3856	4483	5094	5693	6293	6881	7462	8024	8574	9113	9629
	69	145	219	292	364	435	506	575	643	710	777	842	906	968	1029	1087
15	50	48	47	46	45	44	44	44	43	42	41	40	40	39	38	37
6	570	1248	1906	2547	3178	3800	4420	5025	5619	6203	6773	7345	7899	8449	8992	9525
	64	141	215	288	359	429	499	567	634	700	765	829	892	954	1015	1075
23	76	74	73	71	70	69	68	68	69	68	68	67	66	65	64	63
8	540	1210	1871	2522	3152	3781	4404	5008	5607	6186	6749	7319	7879	8433	8977	9512
	61	137	211	285	356	427	497	565	633	698	762	826	890	952	1013	1074
30	101	100	98	96	94	93	92	92	92	93	93	93	93	92	91	91
10	496	1161	1825	2471	3110	3733	4362	4968	5574	6157	6721	7274	7811	8356	8887	9416
	56	131	206	279	351	421	492	561	629	695	759	821	882	943	1003	1063
38	126	126	124	122	120	118	115	113	113	113	114	116	118	118	117	117
12	443	1108	1768	2418	3059	3688	4307	4918	5526	6114	6681	7239	7786	8338	8876	9411
	50	125	200	273	345	416	486	555	624	690	754	817	879	941	1002	1062
45	151	151	150	148	145	143	141	140	139	139	140	142	144	144	144	144
14	387	1034	1701	2346	2985	3610	4227	4839	5452	6050	6622	7184	7723	8269	8816	9362
	44	117	192	265	337	408	477	546	615	683	748	811	872	934	995	1057
53	177	177	176	173	171	168	166	165	163	163	165	167	169	171	170	170
16	366	961	1620	2264	2903	3530	4147	4753	5366	5960	6540	7098	7642	8169	8685	9211
	41	109	183	256	328	399	468	537	606	673	738	801	863	922	980	1040
61	202	202	201	199	197	195	192	190	189	188	188	189	191	194	196	196
18	291	893	1546	2187	2829	3450	4067	4678	5283	5873	6451	7005	7537	8064	8580	9103
	33	101	175	247	319	390	459	528	596	663	728	791	851	910	969	1028
68	227	227	227	224	222	219	217	215	213	211	212	214	217	220	221	221
20	204	797	1444	2094	2736	3361	3974	4585	5184	5775	6353	6907	7448	7974	8489	8992
	23	90	163	236	309	380	449	518	585	652	717	780	841	900	958	1015
76	252	252	252	251	249	246	243	241	239	238	238	239	242	245	247	248
22	102	710	1366	2013	2651	3270	3885	4496	5096	5689	6271	6831	7362	7877	8375	8880
	12	80	154	227	299	369	439	508	575	642	708	771	831	889	945	1003
83	278	278	278	277	274	272	269	267	265	264	263	265	269	273	275	275
25		553	1208	1851	2489	3114	3726	4335	4930	5523	6108	6670	7220	7783	8298	8777
		62	136	209	281	352	421	489	557	624	690	753	815	879	937	991
95		316	316	316	313	310	307	303	301	299	298	298	301	306	310	312
30		233	941	1539	2179	2811	3430	4028	4625	5217	5802	6385	6957	7522	8060	8565
		26	106	174	246	317	387	455	522	589	655	721	785	849	910	967
114		379	379	379	377	374	371	367	365	363	362	361	364	368	374	376

Delta Series

Performance Data

347cm³/r [21.2 in³/r]
ΔPressure Bar [PSI]

Flow LPM [GPM]	17 250	34 500	52 750	69 1000	86 1250	103 1500	121 1750	138 2000	155 2250	172 2500	190 2750	207 3000	224 3250	241 3500	259 3750	276 4000
2	687	1415	2128	2824	3532	4248	4947	5633	6298	6964	7575	8182	8743	9209	9624	10081
	78	160	240	319	399	480	558	636	711	786	855	924	987	1040	1087	1138
7.6	20	19	18	18	17	18	17	17	16	15	14	13	12	9	8	4
4	689	1443	2179	2891	3606	4302	4986	5653	6316	6965	7615	8260	8891	9515	10120	10698
	78	163	246	326	407	486	563	638	713	786	860	933	1004	1074	1143	1208
15	42	41	41	40	39	37	38	38	39	38	38	37	37	35	33	31
6	648	1406	2154	2866	3580	4276	4970	5641	6290	6921	7563	8190	8812	9427	10029	10630
	73	159	243	324	404	483	561	637	710	781	854	925	995	1064	1132	1200
23	64	64	63	61	60	58	57	57	59	60	60	59	58	57	56	55
8	606	1356	2105	2825	3545	4241	4943	5621	6274	6899	7522	8144	8768	9388	9998	10598
	68	153	238	319	400	479	558	635	708	779	849	919	990	1060	1129	1196
30	87	86	85	84	82	81	79	78	79	81	82	81	81	80	78	77
10	550	1295	2041	2765	3488	4188	4891	5585	6264	6899	7505	8091	8672	9283	9885	10488
	62	146	230	312	394	473	552	631	707	779	847	913	979	1048	1116	1184
38	109	108	107	106	104	103	100	98	97	98	100	103	103	103	102	101
12	478	1227	1976	2698	3411	4108	4802	5479	6146	6782	7396	7992	8585	9176	9767	10345
	54	139	223	305	385	464	542	619	694	766	835	902	969	1036	1103	1168
45	131	130	130	129	127	125	122	119	117	115	115	119	123	125	125	124
14	409	1151	1896	2624	3344	4048	4742	5418	6083	6722	7339	7939	8541	9142	9738	10318
	46	130	214	296	378	457	535	612	687	759	829	896	964	1032	1099	1165
53	153	153	152	152	149	147	145	142	140	139	139	143	147	148	147	147
16	339	1033	1774	2494	3209	3907	4605	5280	5956	6610	7243	7850	8438	9014	9592	10166
	38	117	200	282	362	441	520	596	672	746	818	886	953	1018	1083	1148
61	174	174	174	174	172	169	166	164	162	159	159	160	165	168	170	170
18	245	943	1676	2401	3113	3809	4500	5175	5837	6477	7107	7711	8308	8895	9466	10040
	28	106	189	271	351	430	508	584	659	731	802	871	938	1004	1069	1133
68	196	196	196	195	193	192	189	187	185	183	181	182	185	188	192	193
20	143	832	1571	2290	3003	3697	4386	5050	5715	6351	6968	7569	8147	8721	9297	9855
	16	94	177	259	339	417	495	570	645	717	787	855	920	985	1050	1113
76	218	218	218	218	216	214	212	209	207	205	203	203	205	210	214	215
22	34	715	1454	2175	2896	3594	4280	4950	5602	6236	6854	7449	8027	8590	9150	9705
	4	81	164	246	327	406	483	559	632	704	774	841	906	970	1033	1096
83	240	240	240	240	240	238	236	233	230	228	226	226	228	231	237	240
25		523	1251	1969	2693	3395	4081	4756	5414	6057	6687	7296	7882	8457	9011	9534
		59	141	222	304	383	461	537	611	684	755	824	890	955	1017	1076
95		272	272	272	272	272	269	266	263	261	259	259	261	265	270	272
30		152	1072	1749	2434	3123	3802	4468	5114	5763	6400	7018	7633	8232	8819	8997
		17	121	197	275	353	429	504	577	651	723	792	862	929	996	1016
114		327	327	327	327	327	323	319	315	314	313	315	319	323	327	327

Continuous

Intermittent

No operation

152 Torque lb-in
17 Nm
327 Speed RPM

395cm³/r [24.1 in³/r]
ΔPressure Bar [PSI]

Flow LPM [GPM]	17 250	34 500	52 750	69 1000	86 1250	103 1500	121 1750	138 2000	155 2250	172 2500	190 2750	207 3000	224 3250	241 3500
2	782	1622	2436	3237	4034	4837	5650	6428	7213	7911	8607	9235	9798	10439
	88	183	275	365	455	546	638	726	814	893	972	1043	1106	1179
7.6	18	17	17	16	16	16	17	16	15	15	15	14	13	12
4	770	1643	2476	3287	4088	4860	5617	6357	7103	7838	8566	9285	9990	10684
	87	186	280	371	462	549	634	718	802	885	967	1048	1128	1206
15	38	37	36	35	33	33	35	36	36	35	35	34	34	33
6	746	1609	2460	3280	4083	4867	5644	6384	7103	7811	8520	9232	9930	10616
	84	182	278	370	461	549	637	721	802	882	962	1042	1121	1199
23	58	57	55	54	52	51	50	51	53	54	55	54	53	53
8	699	1561	2430	3249	4062	4852	5638	6398	7126	7820	8506	9198	9884	10565
	79	176	274	367	459	548	637	722	805	883	960	1038	1116	1193
30	77	76	75	74	72	70	68	67	69	72	74	74	74	73
10	630	1489	2345	3180	4008	4819	5622	6397	7142	7856	8525	9142	9776	10438
	71	168	265	359	453	544	635	722	806	887	962	1032	1104	1178
38	96	96	95	93	91	90	87	85	83	83	88	93	93	93
12	556	1412	2264	3090	3898	4689	5473	6225	6976	7710	8415	9081	9681	10304
	63	159	256	349	440	529	618	703	788	870	950	1025	1093	1163
45	115	115	115	113	111	109	107	105	102	100	100	105	110	113
14	469	1325	2178	2999	3819	4611	5391	6137	6867	7581	8270	8942	9598	10234
	53	150	246	339	431	521	609	693	775	856	934	1010	1084	1155
53	134	134	134	133	131	128	126	124	122	120	119	123	133	134
16	360	1220	2069	2894	3715	4506	5290	6048	6782	7495	8190	8873	9534	10181
	41	138	234	327	419	509	597	683	766	846	925	1002	1076	1149
61	153	153	153	153	151	148	145	143	140	138	138	139	145	151
18	334	1098	1951	2777	3591	4386	5172	5924	6665	7387	8087	8763	9418	10048
	38	124	220	314	405	495	584	669	752	834	913	989	1063	1134
68	173	173	173	173	171	169	166	162	161	159	157	158	162	169
20	221	993	1837	2660	3479	4259	5030	5780	6518	7238	7939	8613	9258	9892
	25	112	207	300	393	481	568	653	736	817	896	972	1045	1117
76	192	192	192	192	191	189	186	183	181	179	177	178	182	188
22	115	862	1698	2521	3337	4135	4895	5641	6366	7067	7752	8414	9062	9702
	13	97	192	285	377	467	553	637	719	798	875	950	1023	1095
83	211	211	211	211	211	209	206	203	201	200	199	200	204	209
25		637	1473	2296	3117	3909	4687	5434	6163	6861	7536	8192	8829	9475
		72	166	259	352	441	529	613	696	775	851	925	997	1070
95		240	240	240	240	238	235	232	229	227	227	228	233	240
30		211	1079	1903	2725	3526	4311	5079	5824	6547	7240	7921	8577	9228
		24	122	215	308	398	487	573	658	739	817	894	968	1042
114		288	288	288	288	286	283	280	277	274	273	275	280	287

Delta Series

Performance Data

Continuous

Intermittent

No operation

470cm³/r [28.7 in³/r]

ΔPressure Bar [PSI]

Flow LPM [GPM]

	17 250	34 500	52 750	69 1000	86 1250	103 1500	121 1750	138 2000	155 2250	172 2500	190 2750	207 3000
2	925	1885	2820	3727	4639	5526	6404	7270	8129	8978	9794	10551
	104	213	318	421	524	624	723	821	918	1014	1106	1191
7.6	14	14	13	12	12	12	11	10	9	9	8	7
4	942	1942	2917	3849	4776	5692	6594	7488	8352	9199	10014	10824
	106	219	329	435	539	643	744	845	943	1039	1131	1222
15	31	30	29	29	28	27	27	26	25	24	23	23
6	906	1921	2892	3833	4772	5676	6572	7440	8309	9152	9974	10786
	102	217	327	433	539	641	742	840	938	1033	1126	1218
23	47	46	45	45	44	43	43	42	42	41	41	40
8	856	1866	2853	3795	4730	5634	6520	7379	8230	9075	9895	10693
	97	211	322	428	534	636	736	833	929	1025	1117	1207
30	63	62	62	61	60	58	57	57	58	58	57	56
10	780	1799	2800	3745	4685	5594	6479	7337	8177	9009	9843	10638
	88	203	316	423	529	632	731	828	923	1017	1111	1201
38	79	79	78	77	76	75	74	72	72	74	74	74
12	699	1709	2711	3661	4597	5508	6403	7258	8101	8916	9719	10506
	79	193	306	413	519	622	723	819	915	1007	1097	1186
45	96	95	94	93	92	91	90	89	89	90	90	91
14	596	1612	2609	3561	4490	5390	6268	7112	7941	8743	9519	10282
	67	182	295	402	507	608	708	803	897	987	1075	1161
53	112	111	111	110	109	107	106	104	103	101	102	104
16	467	1486	2480	3440	4371	5268	6152	6992	7810	8601	9370	10118
	53	168	280	388	493	595	695	789	882	971	1058	1142
61	129	128	127	126	125	123	122	120	119	117	116	116
18	332	1353	2357	3317	4256	5157	6043	6892	7713	8501	9270	10026
	37	153	266	375	481	582	682	778	871	960	1047	1132
68	145	145	144	143	142	140	138	136	135	134	132	133
20	304	1226	2218	3172	4102	4994	5873	6731	7557	8365	9147	9922
	34	138	250	358	463	564	663	760	853	944	1033	1120
76	161	161	160	159	158	157	155	153	152	150	149	150
22	137	1059	2048	3004	3945	4840	5727	6576	7399	8198	8967	9715
	15	120	231	339	445	546	647	742	835	926	1012	1097
83	177	177	177	176	175	174	172	170	169	167	166	166
25		833	1816	2765	3680	4575	5455	6313	7133	7928	8691	9436
		94	205	312	415	517	616	713	805	895	981	1065
95		201	201	201	200	198	196	194	193	191	191	192
30		491	1318	2295	3232	4142	5022	5881	6721	7522	8300	9320
		55	149	259	365	468	567	664	759	849	937	1052
114		241	241	241	241	240	237	236	236	233	232	227

491 } Torque lb-in
55 } Nm
241 } Speed RPM

542cm³/r [33.1 in³/r]

ΔPressure Bar [PSI]

Flow LPM [GPM]

	17 250	34 500	52 750	69 1000	86 1250	103 1500	121 1750	138 2000	155 2250	172 2500
2	1131	2304	3433	4558	5668	6725	7732	8683	9645	10457
	128	260	388	515	640	759	873	980	1089	1181
7.6	13	12	11	11	11	11	10	8	8	7
4	1139	2352	3515	4638	5735	6781	7819	8809	9752	10644
	129	266	397	524	648	766	883	994	1101	1202
15	27	26	25	25	25	25	24	23	23	22
6	1063	2267	3433	4549	5645	6694	7697	8675	9630	10557
	120	256	388	514	637	756	869	979	1087	1192
23	41	40	39	38	38	38	39	38	37	36
8	992	2186	3354	4475	5578	6646	7665	8608	9535	10449
	112	247	379	505	630	750	865	972	1076	1180
30	56	55	54	53	52	52	51	52	52	51
10	897	2090	3259	4378	5482	6555	7602	8578	9482	10343
	101	236	368	494	619	740	858	968	1071	1168
38	70	69	68	67	67	65	64	64	64	65
12	807	1980	3138	4256	5365	6440	7494	8481	9403	10275
45	91	224	354	481	606	727	846	957	1062	1160
	84	83	83	81	80	79	78	77	76	77
14	693	1873	3028	4138	5218	6268	7318	8304	9235	10105
	78	211	342	467	589	708	826	937	1043	1141
53	98	98	97	96	95	93	91	90	91	92
16	554	1732	2882	3993	5083	6107	7118	8089	9032	9928
	63	196	325	451	574	689	804	913	1020	1121
61	112	112	111	110	109	108	106	104	104	106
18	409	1582	2738	3844	4924	5952	6956	7928	8874	9772
	46	179	309	434	556	672	785	895	1002	1103
68	126	126	126	125	124	123	121	119	119	121
20	355	1428	2587	3696	4767	5804	6813	7786	8732	9624
	40	161	292	417	538	655	769	879	986	1087
76	140	140	140	139	138	137	136	134	134	135
22	310	1259	2412	3518	4595	5619	6618	7589	8536	9438
	35	142	272	397	519	634	747	857	964	1065
83	154	154	154	154	152	151	150	148	148	149
25		958	2107	3215	4281	5310	6305	7264	8204	9110
		108	238	363	483	599	712	820	926	1029
95		174	174	174	174	173	171	170	168	169
30		521	1599	2696	3769	4804	5809	6776	7705	8617
		59	181	304	425	542	656	765	870	973
114		209	209	209	209	208	207	207	205	205

Delta Series

Performance Data

Continuous

Intermittent

No operation

649cm³/r [39.6 in³/r]
ΔPressure Bar [PSI]

Flow LPM [GPM]

	17 250	34 500	52 750	69 1000	86 1250	103 1500	121 1750	138 2000	155 2250
2	1365	2787	4156	5488	6775	7949	9102	10174	11100
	154	315	469	620	765	897	1028	1149	1253
7.6	10	10	10	9	9	8	7	6	3
4	1326	2770	4113	5400	6632	7819	8973	10030	11015
	150	313	464	610	749	883	1013	1132	1244
15	22	22	21	20	21	20	19	19	18
6	1258	2663	3998	5270	6521	7692	8774	9808	10809
	142	301	451	595	736	868	991	1107	1220
23	35	34	33	32	32	32	32	32	31
8	1154	2558	3902	5195	6455	7659	8775	9770	10708
	130	289	441	587	729	865	991	1103	1209
30	47	46	45	44	42	42	42	43	43
10	1045	2442	3787	5076	6331	7541	8691	9685	10573
	118	276	428	573	715	851	981	1093	1194
38	58	58	57	56	55	53	53	54	55
12	928	2321	3662	4939	6193	7385	8536	9577	10469
	105	262	413	558	699	834	964	1081	1182
45	70	70	70	68	67	66	65	65	66
14	740	2127	3469	4746	5989	7188	8352	9433	10439
	84	240	392	536	676	812	943	1065	1179
53	82	82	82	81	80	79	77	76	76
16	614	1990	3318	4588	5795	6942	8081	9154	10141
	69	225	375	518	654	784	912	1033	1145
61	93	93	93	93	92	91	90	89	90
18	448	1830	3158	4414	5619	6754	7853	8890	9873
	51	207	356	498	634	763	887	1004	1115
68	105	105	105	105	104	103	102	102	104
20	281	1618	2944	4198	5410	6551	7653	8689	9676
	32	183	332	474	611	740	864	981	1092
76	117	117	117	117	117	116	114	114	115
22	276	1518	2842	4099	5313	6453	7554	8596	9576
	31	171	321	463	600	728	853	970	1081
83	128	128	128	128	128	128	126	125	126
25		1079	2393	3646	4834	5969	7071	8112	9105
		122	270	412	546	674	798	916	1028
95		146	146	146	146	146	145	144	144
30		436	1747	3013	4225	5356	6454	7489	8479
		49	197	340	477	605	729	845	957
114		175	175	175	175	175	174	174	175

8479 Torque lb-in
957 Nm
175 Speed RPM

754cm³/r [46.0 in³/r]
ΔPressure Bar [PSI]

Flow LPM [GPM]

	17 250	34 500	52 750	69 1000	86 1250	103 1500	121 1750	138 2000
2	1561	3128	4605	6014	7422	8721	9978	10910
	176	353	520	679	838	985	1127	1232
7.6	9	8	8	8	7	7	6	5
4	1548	3142	4650	6029	7350	8605	9785	10892
	175	355	525	681	830	971	1105	1230
15	19	18	18	18	18	18	17	17
6	1470	3084	4608	6022	7346	8555	9722	10850
	166	348	520	680	829	966	1098	1225
23	30	29	28	27	27	27	27	27
8	1359	2975	4504	5925	7263	8488	9638	10694
	153	336	509	669	820	958	1088	1207
30	40	39	38	38	37	36	37	38
10	1240	2844	4364	5815	7185	8458	9603	10584
	140	321	493	656	811	955	1084	1195
38	50	50	49	48	47	46	46	47
12	1079	2686	4207	5641	7008	8248	9390	10400
	122	303	475	637	791	931	1060	1174
45	60	60	60	59	58	57	57	57
14	932	2512	4038	5477	6850	8124	9274	10286
	105	284	456	618	773	917	1047	1161
53	70	70	70	70	69	68	67	67
16	753	2328	3834	5246	6577	7831	8999	10040
	85	263	433	592	742	884	1016	1133
61	80	80	80	80	80	79	78	78
18	547	2119	3632	5024	6320	7551	8706	9721
	62	239	410	567	714	852	983	1097
68	90	90	90	90	90	90	90	90
20	310	1919	3430	4826	6126	7339	8466	9430
	35	217	387	545	692	829	956	1065
76	100	100	100	100	100	100	100	100
22	248	1666	3172	4571	5878	7102	8254	9269
	28	188	358	516	664	802	932	1046
83	110	110	110	110	110	110	110	110
25		1261	2784	4191	5504	6727	7873	8911
		142	314	473	621	759	889	1006
95		126	126	126	126	126	126	126
30		545	2055	3474	4800	6036	7175	8231
		62	232	392	542	681	810	929
114		151	151	151	151	151	151	151

Delta Series

Dimensions

Wheel Mount

Ports

7/8 -14 UNF-2B SAE O-ring Ports

G 1/2 (BSP) Ports

Standard Rotation Viewed from Shaft End

Port A Pressurized — CCW

Port B Pressurized — CW

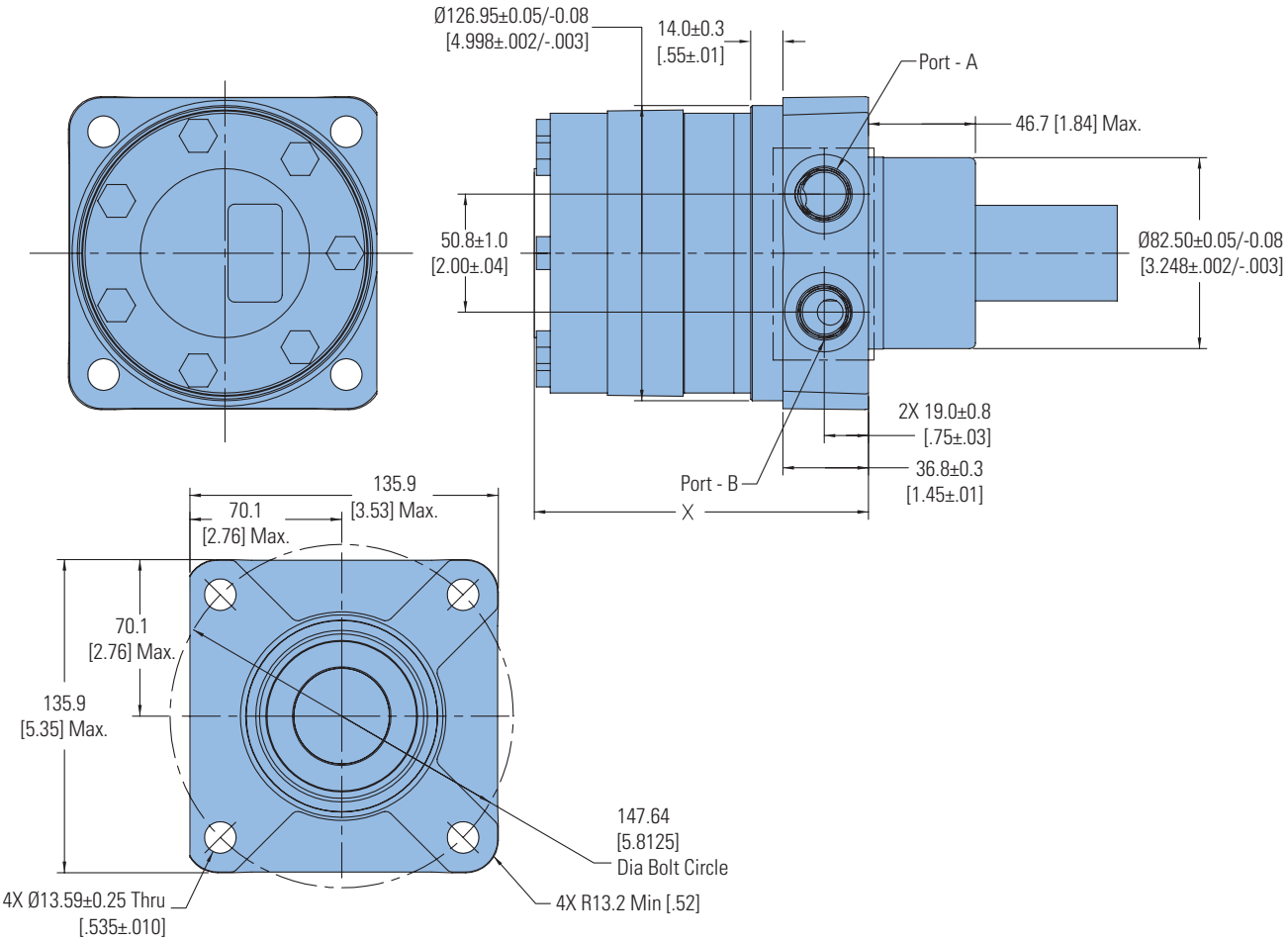

DISPLACEMENT CODE	X MAX	CODE	MAX
069	130.6 [5.14]	212	156.5 [6.16]
089	135.9 [5.35]	241	162.6 [6.40]
121	144.3 [5.68]	287	172.5 [6.79]
143	150.4 [5.92]	331	181.9 [7.16]
154	153.2 [6.03]	396	195.6 [7.70]
183	150.4 [5.92]	460	209.0 [8.23]

Delta Series

Dimensions

Standard Mount

Ports

7/8 -14 UNF-2B SAE O-ring Ports

G 1/2 (BSP) Ports

Standard Rotation Viewed from Shaft End

Port A Pressurized — CCW

Port B Pressurized — CW

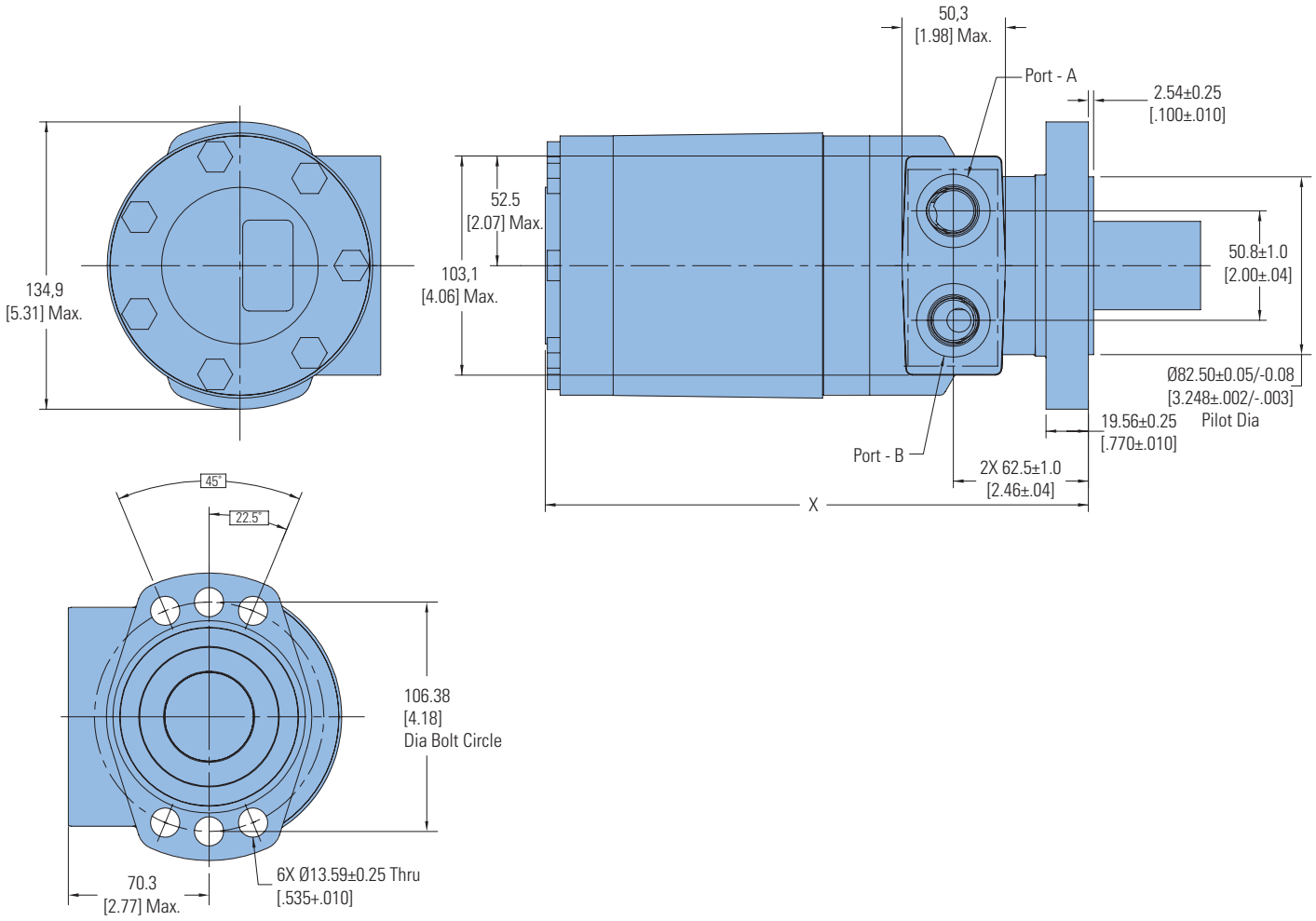

DISPLACEMENT CODE	X MAX	CODE	MAX
069	173.8 [6.84]	212	199.8 [7.87]
089	179.7 [7.08]	241	206.0 [8.11]
121	187.7 [7.39]	287	215.8 [8.50]
143	193.7 [7.63]	331	225.1 [8.86]
154	196.5 [7.74]	396	238.8 [9.40]
183	193.7 [7.63]	460	252.3 [9.93]

Dimensions

Shafts

1½ Inch Straight

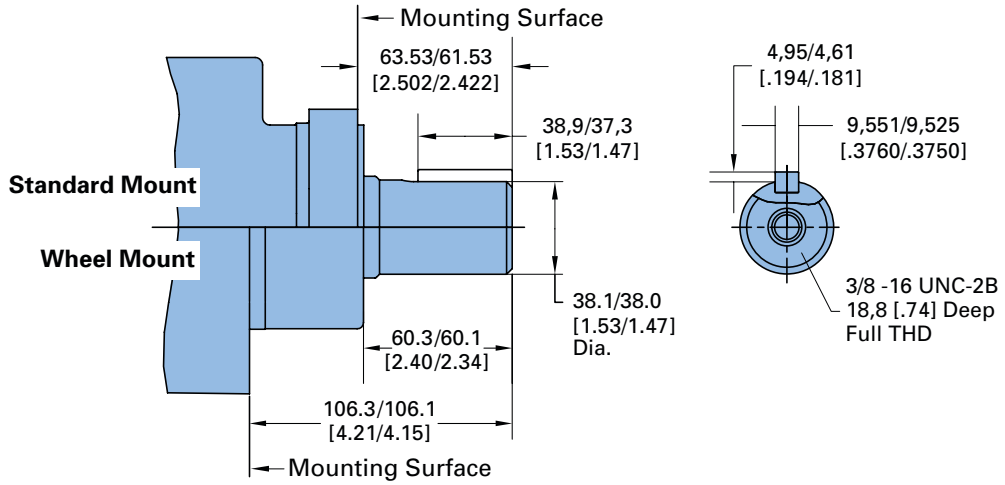

1¼ Inch 14 Tooth Splined

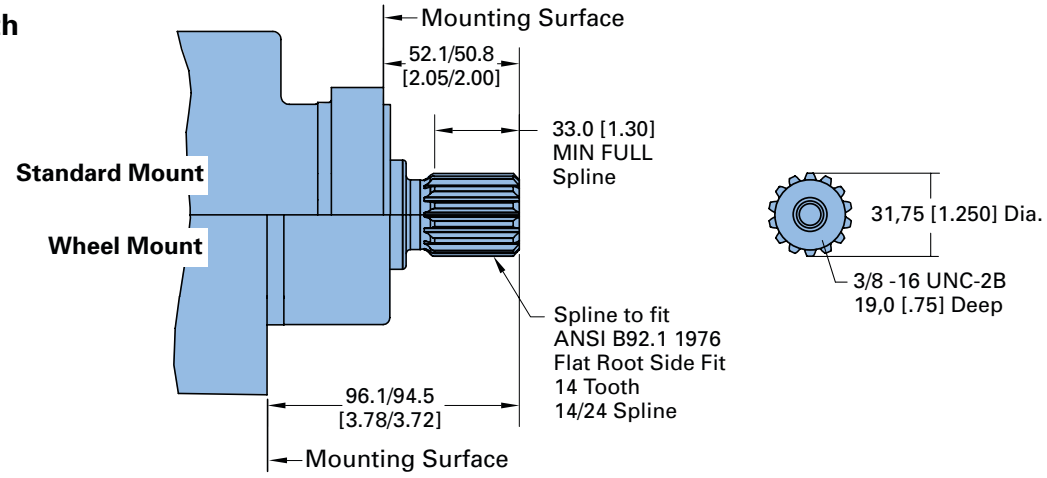

1¼ Inch Tapered

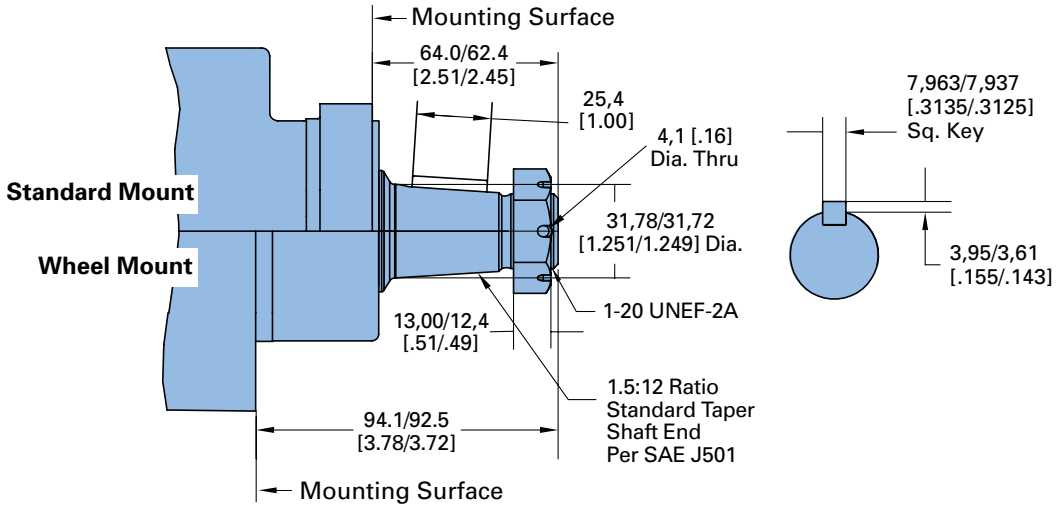

Shaft Side Load Capacity

These curves indicate the radial load capacity on the motor shaft(s) at various locations.

Each curve is based on B 10 bearing life (2000 hours of 12,000,000 shaft revolutions at 100 RPM) at rated output torque. To determine radial load at speeds other than 100 RPM, multiply the load values given on the bearing curve by the factors in the chart below.

RPM	Multiplication Factor
50	1.23
100	1.00
200	0.81
300	0.72
400	0.66
500	0.62
600	0.58
700	0.56
800	0.54

Side Load Chart for Standard Mount

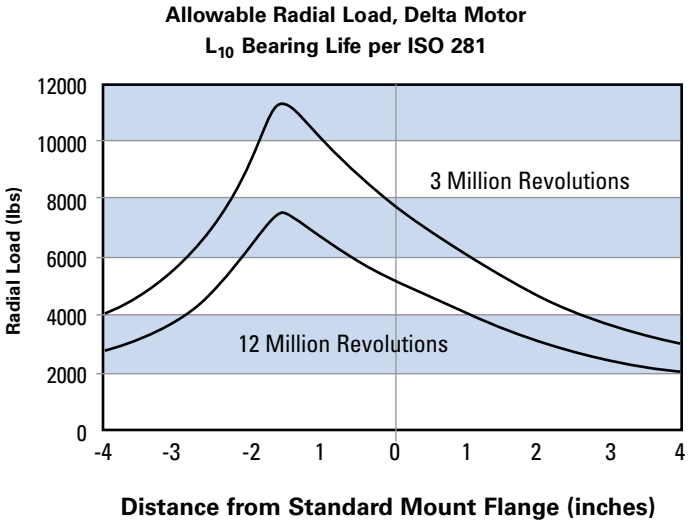

Side Load Chart for Wheel Mount

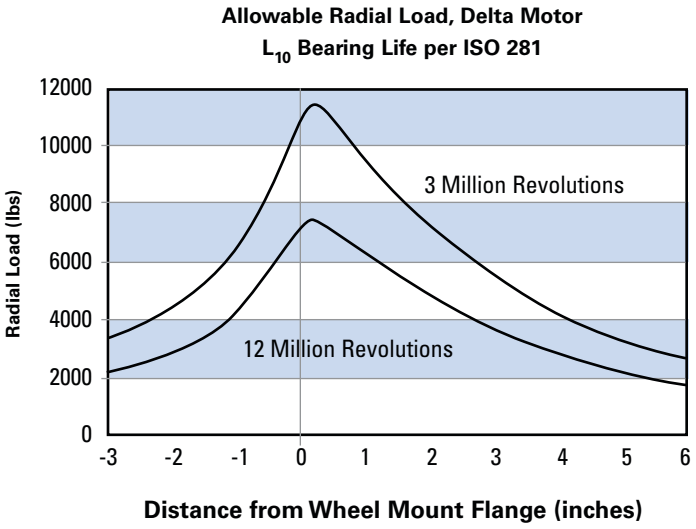

Delta Series

Product Numbers

Note:
For Delta Series Motors with a configuration **Not Shown** in the charts below contact your Eaton Representative.

Mounting	Shaft	Port Size	Timing	Displacement cm^3/r [in^3/r] / Product Number			
				113 [6.9]	**146 [8.9]**	**198 [12.1]**	**234 [14.3]**
	1-1/4 Inch	7/8" O-ring	Standard -CCW	184-0005-002	184-0006-002	184-0002-002	184-0001-002
	Tapered		Standard -CW	184-0025-002	184-0026-002	184-0027-002	184-0028-002
	1-1/2 Inch	7/8" O-ring	Standard -CCW	184-0013-002	184-0014-002	184-0015-002	184-0016-002
	17 T Splined		Standard -CW	184-0037-002	184-0038-002	184-0039-002	184-0040-002
				252 [15.4]	**300 [18.3]**	**347 [21.2]**	**395 [24.1]**
Wheel	1-1/4 Inch	7/8" O-ring	Standard -CCW	184-0003-002	184-0004-002	184-0007-002	184-0008-002
Motor	Tapered		Standard -CW	184-0029-002	184-0030-002	184-0031-002	184-0032-002
	1-1/2 Inch	7/8" O-ring	Standard -CCW	184-0017-002	184-0018-002	184-0019-002	184-0020-002
	17 T Splined		Standard -CW	184-0041-002	184-0042-002	184-0043-002	184-0044-002
				470 [28.7]	**542 [33.1]**	**649 [39.6]**	**754 [46.0]**
	1-1/4 Inch	7/8" O-ring	Standard -CCW	184-0009-002	184-0010-002	184-0011-002	184-0012-002
	Tapered		Standard -CW	184-0033-002	184-0034-002	184-0035-002	184-0036-002
	1-1/2 Inch	7/8" O-ring	Standard -CCW	184-0021-002	184-0022-002	184-0023-002	184-0024-002
	17 T Splined		Standard -CW	184-0045-002	184-0046-002	184-0047-002	184-0048-002

Delta Series

Model Code

The following 26-digit coding system has been developed to identify all of the configuration options for the Delta Low Speed High Torque motor. Use this model code to specify a motor with the desired features. All 26 digits of the code must be present when ordering. You may want to photocopy the matrix below to ensure that each number is entered in the correct box.

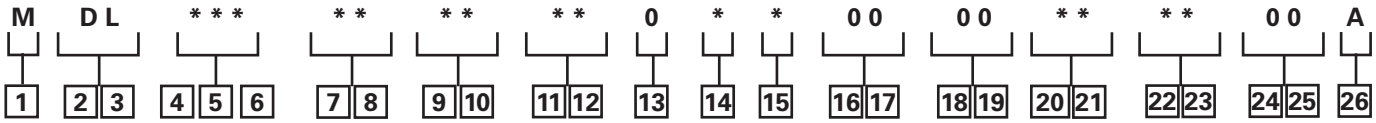

1 Product

M – Motor

2, 3 Series

DL – Delta Series

4, 5, 6 Displacement cm^3/r [in^3/r]

069 – 113 [6.9]

089 – 146 [8.9]

121 – 198 [12.1]

143 – 234 [14.3]

154 – 252 [15.4]

183 – 300 [18.3]

212 – 347 [21.2]

241 – 395 [24.1]

287 – 470 [28.7]

331 – 542 [33.1]

396 – 649 [39.6]

460 – 754 [46.0]

7, 8 Mounting Type

AA – Wheel, 4 Bolt: 82.6 [3.25] Pilot Dia. 13.59 [.535] Dia. Holes On 147.6 [5.81] Dia. Bolt Circle. 127.0 [5.00] Dia. Rear Mount Pilot

AB – Standard, 6 Bolt: 82.6 [3.25] Pilot Dia. 13.59 [.535] Dia. Holes on 106.4 [4.19] Dia. Bolt Circle. .100 [2.54] Pilot Length. Sae A, Magneto

AC – Standard, 6 Bolt: 82.6 [3.25] Pilot Dia. 13.59 [.535] Dia. Holes on 106.4 [4.19] Dia. Bolt Circle. .250 [6.35] Pilot Length. SAE A, Magneto

9, 10 Output Shaft

01 – 38.10 [1.500] Dia. Straight with .375-16 UNC-2B Thread, and 9.52 [.375] Sq x 25.40 [1.000] Straight Key

02 – 31.75 [1.250] Dia. .125:1 Tapered Shaft per SAE J501 with 1.000-20 UNEF-2A Threaded Shaft End and Slotted Hex Nut, 7.938 [.3125] Sq x 25.40 [1.000] Straight Key

03 – 41.30 [1.626] Dia. .125:1 Tapered Shaft per SAE J501 with 1.250-18 UNEF-2A Threaded Shaft End and Slotted Hex Nut, 11.125 [.4380] Sq x 34.04 [1.340] Straight Key

04 – 31.75 [1.250] Dia. Flat Root Side Fit, 14 Tooth, 12/24 DP 30 Deg. Involute Spline with .375-16 UNC-2B Thread in End, 33.0 [1.30] Minimum Full Spline Length

05 – 38.10 [1.500] Dia. Flat Root Side Fit, 17 Tooth, 12/24 DP 30 Deg. Involute Spline, 31.8 [1.25] Minimum Full Spline Length, with .375-16 UNC-2B Thread in End

06 – 38.10 [1.500] Dia. Tapered Shaft per SAE J501 with 1.000-20 UNEF-2A Thread in End, 7.938 [.3125] Sq x 31.75 [1.250] Key

11, 12 Ports

AA – .875-14 UNF-2B SAE O-Ring

AC – G 1/2 BSP Straight Thread

13 Pressure/Flow Option

0 – None

14 Geroler Option

0 – Standard

B – Tight Fitting Geroler

15 Seal Option

00 – Standard Seals

02 – Seal Guard

03 – Viton Seals

04 – Viton Shaft Seal

11 – High pressure shaft seal, slinger seal

19 – Extreme duty seal guard

16, 17 Accessories

00 – None

18, 19 Special Features (Hardware)

00 – None

20, 21 Special Features (Assembly)

00 – Standard Rotation - CCW

01 – Standard Rotation - CW

22, 23 Paint/Packaging

AA - No Paint, Individual Box

AB - Low Gloss Black Primer, Individual Box

AC - Epoxy Coated (Frost Gray), Individual Box

AE - No Paint, Bulk Box

AF - Low Gloss Black Primer, Bulk Box

24, 25 Customer Identification

00 – None

26 Design Code

B – Two (2)

Feature in **bold** are preferred and allow for shorter lead time.

4000 Series

Highlights

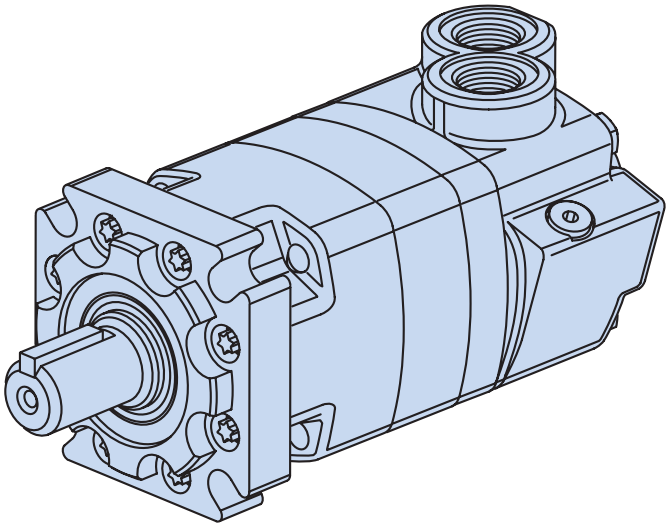

Features

- 10 displacements, a variety of mounting flanges and output shafts
- Reliable, proven design
- High efficiency
- Environmental protection options

Benefits

- Flexiblilty in designing this motor into a system
- Options that fit well into tough applications

Applications

- Mowing
- Snow Removal
- Sprayer
- Trencher
- Wood Products

Description

The 4000 Series offers up to 8600 in-lb of torque and 25 gpm (continuous ratings). This is the corner stone of the Char-Lynn line.

4000 Series Motors

Geroler Element	10 Displacements
Flow l/min [GPM]	95 [25] Continuous**
	150 [40] Intermittent*
Speed RPM	722 Cont.**
	868 Inter.*
Pressure bar [PSI]	200 [3000] Cont.**
	300 [4500] Inter.*
Torque Nm [lb-in]	970 [8600] Cont.**
	1180 [10450] Inter.*

** Continuous— (Cont.) Continuous rating, motor may be run continuously at these ratings
* Intermittent— (Inter.) Intermittent operation, 10% of every minute.

C-4



Mowing



Snow Removal



Sprayer



Trencher

4000 Series

Specifications

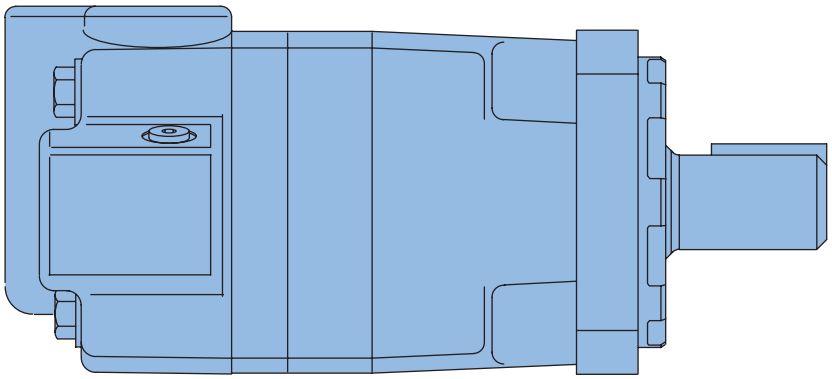

4000 SERIES MOTORS

Displ. cm^3/r [in^3/r]		110 [6.7]	130 [7.9]	160 [9.9]	205 [12.5]	245 [15.0]	280 [17.1]	310 [19.0]	395 [24.0]	495 [30.0]	625 [38.0]
Max. Speed (RPM) @ Flow	Continuous	697	722	582	459	383	336	303	239	191	151
	Intermittent	868	862	693	546	532	488	422	376	305	241
Flow l/min [GPM]	Continuous	75 [20]	95 [25]	95 [25]	95 [25]	95 [25]	95 [25]	95 [25]	95 [25]	95 [25]	95 [25]
	Intermittent	95 [25]	115 [30]	115 [30]	115 [30]	130 [35]	130 [35]	130 [35]	150 [40]	150 [40]	150 [40] .
Torque* Nm [lb-in]	Continuous	320 [2850]	375 [3330]	485 [4290]	600 [5300]	705 [6240]	753 [6666]	850 [7530]	930 [8240]	945 [8375]	970 [8605]
	Intermittent	470 [4160]	560 [4940]	705 [6240]	800 [7100]	845 [7470]	957 [8471]	1065 [9420]	1185 [10470]	1170 [10350]	1180 [10450]
Pressure Δ bar [Δ PSI]	Continuous	205 [3000]	205 [3000]	205 [3000]	205 [3000]	205 [3000]	205 [3000]	205 [3000]	190 [2750]	140 [2000]	115 [1700]
	Intermittent	310 [4500]	310 [4500]	310 [4500]	260 [3750]	310 [4500]	260 [3750]	260 [3750]	240 [3500]	170 [2500]	140 [2000]
	Peak	310 [4500]	310 [4500]	310 [4500]	310 [4500]	310 [4500]	310 [4500]	310 [4500]	295 [4250]	230 [3300]	180 [2600]
Weight kg [lb]	Standard or Wheel Mount	17.9 [39.5]	18.1 [40.0]	18.1 [40.0]	18.4 [40.5]	18.6 [41.0]	19.1 [42.0]	19.5 [43.0]	20.4 [45.0]	21.8 [48.0]	23.1 [51.0]
	Bearingless	14.1 [31.0]	14.3 [31.5]	14.1 [31.0]	14.5 [32.0]	14.7 [32.5]	15.2 [33.5]	15.6 [34.5]	16.6 [36.5]	17.9 [39.5]	19.3 [[42.5]

Maximum Case Pressure: See case pressure seal limitation graph.

*See shaft torque ratings for limitations..

Note:

To assure best motor life, run motor for approximately one hour at 30% of rated pressure before application to full load. Be sure motor is filled with fluid prior to any load applications.

Maximum Inlet Pressure:

310 bar [4500 PSI]

Do not exceed Δ pressure rating (see chart above).

Maximum Return Pressure:

310 bar [4500 PSI] with case drain line installed.

Do not exceed Δ pressure rating (see chart above).

Δ bar [Δ PSI] :

The true pressure difference between inlet port and outlet port

Continuous Rating:

Motor may be run continuously at these ratings

Intermittent Operation:

10% of every minute

Peak Operation:

1% of every minute

Recommended Fluids:

Premium quality, anti-wear type hydraulic oil with a viscosity of not less than 70 SUS at operating temperature.

Recommended System Operating Temp.:

-34°C to 82°C [-30°F to 180°F]

Recommended Filtration:

per ISO Cleanliness Code, 4406: 20/18/13

4000 Series

Performance Data

Motors run with high efficiency in all areas designated with a number for torque and speed. For best motor life select a motor to run with a torque and speed range shown in the light shaded area.

Performance data is typical at 120 SUS. Actual data may vary slightly from unit to unit in production.

Continuous

Peak

Intermittent

No Operation

110cm³/r [6.7 in³/r]
ΔPressure Bar [PSI]

Flow LPM [GPM]	[250] 155	[500] 35	[1000] 70	[1500] 105	[2000] 140	[2500] 170	[3000] 205	[3500] 240	[4000] 275	[4500] 310
[.5] 1,9	[150] 15 14	[390] 45 10	[850] 95 5	[1290] 145 2						
[1] 3,8	[170] 20 34	[440] 50 33	[900] 100 31	[1380] 155 28	[1860] 210 25	[2270] 255 22	[2680] 305 18	[3110] 350 11		
[2] 7,5	[180] 20 68	[450] 50 67	[910] 105 62	[1390] 155 56	[1860] 210 50	[2280] 260 44	[2700] 305 36	[3120] 355 28	[3450] 390 18	
[4] 15	[190] 20 138	[460] 50 136	[940] 105 123	[1400] 160 110	[1870] 210 97	[2310] 260 84	[2730] 310 70	[3140] 355 56	[3560] 400 42	[3880] 440 28
[6] 23	[200] 25 207	[470] 55 204	[960] 110 200	[1420] 160 193	[1880] 210 184	[2320] 260 174	[2760] 310 163	[3200] 360 150	[3640] 410 136	[3950] 455 121
[8] 30	[190] 20 277	[460] 50 274	[950] 105 270	[1420] 160 262	[1880] 210 253	[2340] 265 241	[2790] 315 228	[3230] 365 213	[3670] 415 196	[4010] 455 179
[10] 38	[180] 20 347	[460] 50 344	[950] 105 340	[1420] 160 331	[1890] 215 322	[2350] 265 308	[2820] 320 292	[3260] 370 274	[3700] 420 255	[4070] 460 236
[12] 45	[160] 20 417	[450] 50 414	[940] 105 410	[1420] 160 400	[1880] 210 390	[2350] 265 374	[2820] 320 355	[3260] 370 335	[3710] 420 313	[4080] 460 292
[14] 53	[140] 15 487	[440] 50 484	[930] 105 480	[1420] 160 469	[1880] 210 458	[2350] 265 440	[2830] 320 419	[3280] 370 446	[3730] 420 471	[4110] 465 348
[16] 61	[130] 15 556	[440] 50 553	[920] 105 549	[1410] 160 537	[1870] 210 525	[2350] 265 505	[2840] 320 482	[3300] 375 455	[3750] 425 428	[4120] 465 404
[18] 68	[100] 10 626	[440] 50 622	[910] 105 618	[1400] 160 606	[1870] 210 593	[2350] 265 570	[2840] 320 545	[3300] 375 516	[3770] 425 485	[4140] 465 460
[20] 76	[80] 10 697	[430] 50 694	[900] 100 690	[1370] 155 677	[1860] 210 664	[2350] 265 638	[2850] 320 611	[3320] 375 579	[3790] 430 545	[4160] 470 518
[25] 95										

[430] 50 694 } Torque [lb-in] Nm Speed RPM

130cm³/r [7.9 in³/r]
ΔPressure Bar [PSI]

Flow LPM [GPM]	[250] 155	[500] 35	[1000] 70	[1500] 105	[2000] 140	[2500] 170	[3000] 205	[3500] 240	[4000] 275	[4500] 310
[.5] 1,9	[310] 35 12	[510] 60 9	[1060] 120 5	[1590] 180 2						
[1] 3,8	[290] 35 30	[530] 60 28	[1080] 120 25	[1600] 180 19	[2110] 240 14	[2640] 300 13	[3060] 34 5 12	[3450] 390 4		
[2] 7,5	[280] 30 57	[530] 60 56	[1100] 125 53	[1620] 185 47	[2140] 240 42	[2660] 300 40	[3180] 360 38	[3600] 405 29	[4020] 455 20	[4080] 460 12
[4] 15	[260] 30 116	[520] 60 114	[1100] 125 111	[1650] 185 105	[2200] 250 100	[2700] 305 95	[3210] 365 90	[3660] 415 70	[4100] 465 50	[4560] 515 37
[6] 23	[240] 25 173	[510] 60 170	[1100] 125 167	[1650] 185 161	[2200] 250 156	[2720] 305 149	[3240] 36 5 142	[3710] 420 123	[4180] 470 104	[4660] 525 91
[8] 30	[230] 25 228	[510] 60 225	[1080] 120 222	[1640] 185 216	[2210] 250 210	[2740] 310 202	[3270] 370 194	[3770] 425 176	[4270] 480 158	[4750] 535 145
[10] 38	[210] 25 283	[510] 60 225	[1080] 120 278	[1640] 185 272	[2210] 250 266	[2750] 310 256	[3300] 375 246	[3820] 430 229	[4350] 490 212	[4840] 545 189
[12] 45	[200] 25 341	[500] 55 338	[1070] 120 335	[1640] 185 329	[2220] 250 323	[2750] 310 312	[3300] 375 300	[3840] 435 282	[4370] 495 263	[4870] 550 237
[14] 53	[180] 20 400	[490] 55 396	[1060] 120 392	[1640] 185 386	[2220] 250 380	[2750] 310 368	[3310] 375 355	[3860] 435 335	[4390] 495 366	[4890] 550 286
[16] 61	[160] 20 457	[490] 55 453	[1050] 120 449	[1630] 185 443	[2220] 250 437	[2760] 310 424	[3310] 375 410	[3860] 435 388	[4400] 495 366	[4920] 555 335
[18] 68	[130] 15 516	[480] 55 511	[1050] 120 506	[1630] 185 500	[2220] 250 494	[2760] 310 480	[3320] 375 465	[3870] 435 442	[4420] 500 418	[4940] 560 384
[20] 76	[110] 10 574	[470] 55 569	[1040] 120 564	[1620] 185 559	[2210] 250 551	[2760] 310 536	[3330] 375 520	[3890] 440 495	[4440] 500 470	
[22] 83	[70] 10 633	[450] 50 628	[1020] 115 624	[1610] 18 0 615	[2190] 24 5 606	[2750] 310 590	[3320] 375 573	[3880] 440 547	[4440] 500 520	
[25] 95	[50] 5 722	[430] 50 718	[1000] 115 714	[1580] 180 702	[2160] 245 690	[2720] 305 672	[3300] 375 653	[3860] 435 625	[4430] 500 595	
[30] 114		[400] 45 862	[940] 105 855	[1500] 170 842	[2080] 235 827	[2670] 300 806	[3200] 360 783	[3740] 425 749		

C-4

4000 Series

Performance Data

Motors run with high efficiency in all areas designated with a number for torque and speed. For best motor life select a motor to run with a torque and speed range shown in the light shaded area.

Performance data is typical at 120 SUS. Actual data may vary slightly from unit to unit in production.

Continuous

Peak

Intermittent

No Operation

160cm³/r [9.9 in³/r]
ΔPressure Bar [PSI]

Flow LPM [GPM]

	[250] 15	[500] 35	[1000] 70	[1500] 105	[2000] 140	[2500] 170	[3000] 205	[3500] 240	[4000] 275	[4500] 310
[.5] 1,9	[300] 35 8	[680] 75 7	[1320] 150 5	[2050] 230 3	[2750] 310 1					
[1] 3,8	[320] 35 23	[700] 80 22	[1350] 155 20	[2070] 235 19	[2780] 315 18	[3300] 375 16	[3940] 445 15	[4410] 500 8	[4950] 560 2	
[2] 7,5	[330] 35 46	[700] 80 45	[1360] 155 41	[2080] 235 40	[2790] 315 37	[3340] 375 32	[3970] 450 29	[4530] 510 27	[5090] 575 25	[5590] 630 13
[4] 15	[320] 35 93	[710] 80 92	[1400] 160 90	[2100] 240 88	[2820] 320 84	[3420] 385 76	[4020] 455 73	[4620] 520 62	[5220] 590 51	[5730] 645 35
[6] 23	[300] 35 137	[710] 80 135	[1420] 160 134	[2140] 240 131	[2850] 320 126	[3510] 395 120	[4180] 470 114	[4760] 540 90	[5340] 605 75	[5870] 665 57
[8] 30	[280] 30 184	[720] 80 182	[1450] 165 180	[2180] 245 176	[2900] 330 171	[3560] 400 163	[4230] 480 154	[4850] 550 138	[5470] 620 122	[6010] 680 100
[10] 38	[260] 30 232	[720] 80 229	[1480] 165 226	[2220] 250 221	[2950] 335 216	[3610] 410 206	[4290] 485 194	[4920] 555 182	[5560] 630 169	[6160] 695 142
[12] 45	[240] 25 277	[700] 80 274	[1450] 165 272	[2190] 245 266	[2920] 330 260	[3590] 405 250	[4280] 485 238	[4920] 555 224	[5570] 630 209	[6180] 700 182
[14] 53	[220] 25 321	[680] 75 319	[1420] 160 318	[2160] 245 311	[2890] 325 304	[3570] 405 294	[4270] 480 282	[4920] 555 266	[5580] 630 249	[6200] 700 222
[16] 61	[200] 25 366	[670] 75 364	[1400] 160 362	[2130] 240 356	[2860] 325 348	[3550] 400 338	[4260] 480 326	[4920] 555 308	[5590] 630 289	[6220] 705 262
[18] 68	[180] 20 410	[650] 75 409	[1360] 155 407	[2100] 235 401	[2830] 320 392	[3530] 400 382	[4250] 480 370	[4910] 555 350	[5600] 635 329	[6240] 705 302
[20] 76	[150] 15 460	[630] 70 458	[1340] 150 456	[2070] 235 448	[2800] 315 440	[3510] 395 429	[4240] 480 417	[4910] 555 396	[5610] 635 373	
[22] 83	[120] 15 509	[620] 70 506	[1330] 150 502	[2060] 235 494	[2790] 315 484	[3500] 395 473	[4220] 475 461	[4910] 555 438	[5600] 635 413	
[25] 95	[70] 10 582	[600] 70 578	[1320] 150 573	[2050] 230 563	[2780] 315 552	[3480] 395 540	[4210] 475 526	[4900] 555 501	[5590] 630 474	
[30] 114		[560] 65 693	[1280] 145 687	[1990] 225 675	[2700] 305 661	[3430] 390 647	[3970] 450 630	[4640] 525 600		

[1990] 225 675 } Torque [lb-in] Nm Speed RPM

205cm³/r [17.1 in³/r]
ΔPressure Bar [PSI]

Flow LPM [GPM]

	[250] 15	[500] 35	[1000] 70	[1500] 105	[2000] 140	[2500] 170	[3000] 205	[3500] 240	[4000] 275	[4500] 310
[.5] 1,9	[400] 45 8	[810] 90 5	[1500] 170 1							
[1] 3,8	[410] 45 17	[830] 95 17	[1590] 180 16	[2220] 250 15	[2860] 325 14	[3860] 435 12	[4560] 515 11	[5390] 610 9	[5510] 625 3	
[2] 7,5	[420] 45 36	[850] 95 35	[1680] 190 34	[2410] 270 32	[3140] 355 29	[4060] 460 27	[4800] 540 25	[5420] 610 22	[6000] 680 16	[6210] 700 8
[4] 15	[430] 50 73	[870] 100 73	[1770] 200 71	[2590] 295 70	[3140] 385 68	[4260] 480 61	[5040] 570 57	[5730] 645 45	[6340] 715 35	[6740] 760 23
[6] 23	[430] 50 107	[880] 100 106	[1800] 205 105	[2620] 295 103	[3530] 400 101	[4370] 495 98	[5170] 585 90	[5900] 665 81	[6590] 745 74	[7100] 800 65
[8] 30	[410] 45 144	[870] 100 143	[1820] 205 142	[2660] 300 138	[3560] 400 136	[4410] 500 132	[5240] 590 125	[6020] 680 116	[6770] 765 109	
[10] 38	[390] 45 182	[860] 95 180	[1820] 205 179	[2700] 305 174	[3580] 405 170	[4460] 505 166	[5300] 600 160	[6110] 690 152	[6890] 780 143	
[12] 45	[350] 40 217	[850] 95 216	[1810] 205 215	[2690] 305 211	[3570] 405 202	[4440] 500 200	[5300] 600 194	[6120] 690 185		
[14] 53	[330] 35 256	[840] 95 254	[1790] 200 252	[2670] 300 248	[3560] 400 243	[4430] 500 237	[5290] 600 229	[6120] 690 219		
[16] 61	[290] 35 291	[820] 95 290	[1770] 200 289	[2650] 300 284	[3540] 400 280	[4410] 500 272	[5280] 595 264	[6120] 690 253		
[18] 68	[270] 30 329	[810] 90 327	[1750] 200 325	[2640] 300 321	[3520] 400 316	[4400] 495 308	[5270] 595 298	[6120] 690 287		
[20] 76	[230] 25 366	[800] 90 364	[1730] 195 362	[2620] 295 358	[3510] 395 353	[4380] 495 345	[5270] 595 334	[6120] 690 321		
[22] 83	[190] 20 402	[780] 90 400	[1690] 190 398	[2600] 295 394	[3500] 395 389	[4370] 495 380	[5260] 595 368			
[25] 95	[150] 15 459	[750] 85 456	[1640] 185 453	[2560] 290 448	[3480] 395 442	[4360] 495 434	[5240] 590 421			
[30] 114		[710] 80 546	[1540] 175 542	[2510] 285 537	[3350] 380 529	[4190] 475 520	[5030] 570 504			

4000 Series

Performance Data

Motors run with high efficiency in all areas designated with a number for torque and speed. For best motor life select a motor to run with a torque and speed range shown in the light shaded area.

Performance data is typical at 120 SUS. Actual data may vary slightly from unit to unit in production.

Continuous

Peak

Intermittent

No Operation

245cm³/r [15.0 in³/r]
ΔPressure Bar [PSI]

Flow LPM [GPM]

	[250] 15	[500] 35	[750] 50	[1000] 70	[1250] 85	[1500] 105	[1750] 120	[2000] 140	[2250] 15	[2500] 170	[2750] 190	[3000] 205	[3250] 225	[3500] 240	[3750] 260
[.5] 1,9	[460] 50 5	[980] 110 2													
[1] 3,8	[480] 55 14	[990] 110 14	[1490] 170 14	[1990] 225 13	[2480] 280 13	[2970] 335 12	[3400] 385 12	[3830] 435 11	[4250] 480 11	[4680] 530 10	[5020] 565 4				
[2] 7,5	[500] 55 30	[1000] 115 30	[1520] 170 29	[2040] 230 29	[2540] 285 28	[3050] 345 27	[3420] 385 26	[3930] 445 24	[4440] 500 23	[4900] 555 22	[5320] 600 20	[5740] 650 18	[6160] 695 16	[6640] 750 14	[7150] 810 11
[4] 15	[510] 60 61	[1030] 115 61	[1560] 175 60	[2080] 235 60	[2600] 295 59	[3130] 355 59	[3630] 410 58	[4130] 465 56	[4630] 525 53	[5120] 580 49	[5570] 630 47	[6030] 680 44	[6480] 730 42	[6870] 775 39	[7340] 830 36
[6] 23	[510] 60 91	[1040] 120 90	[1570] 175 90	[2100] 235 89	[2620] 295 88	[3160] 355 88	[3660] 415 86	[4200] 475 83	[4710] 530 80	[5220] 590 75	[5690] 645 72	[6140] 695 70	[6620] 750 67	[7050] 795 63	[7430] 840 59
[8] 30	[500] 55 121	[1020] 115 121	[1560] 175 120	[2110] 240 119	[2630] 295 118	[3150] 355 117	[3680] 415 115	[4210] 475 113	[4740] 535 111	[5250] 595 106	[5720] 645 103	[6200] 700 99	[6670] 755 96	[7090] 800 91	[7470] 845 87
[10] 38	[470] 55 152	[1000] 115 151	[1540] 175 150	[2100] 235 148	[2620] 295 148	[3150] 355 147	[3690] 415 145	[4230] 480 143	[4770] 540 141	[5290] 600 137	[5670] 650 133	[6240] 705 129	[6710] 760 125	[7140] 805 120	
[12] 45	[450] 50 183	[980] 110 182	[1530] 175 180	[2080] 235 179	[2610] 295 178	[3140] 355 178	[3680] 415 176	[4220] 475 173	[4760] 540 170	[5280] 595 166	[5750] 650 161	[6230] 705 157	[6700] 755 152		
[14] 53	[420] 45 213	[960] 110 212	[1520] 170 211	[2060] 235 210	[2600] 295 209	[3130] 355 208	[3670] 415 206	[4200] 475 203	[4740] 535 200	[5260] 595 195	[5740] 650 190	[6220] 705 185			
[16] 61	[400] 45 244	[950] 105 243	[1500] 170 242	[2040] 230 241	[2580] 290 240	[3120] 355 239	[3660] 415 236	[4190] 475 232	[4730] 535 229	[5250] 595 225	[5730] 650 219	[6210] 700 213			
[18] 68	[380] 45 275	[930] 105 274	[1480] 165 273	[2020] 230 272	[2560] 290 270	[3110] 350 269	[3650] 415 266	[4180] 470 262	[4710] 530 259	[5230] 590 254	[5720] 645 248	[6200] 700 241			
[20] 76	[350] 40 305	[910] 105 305	[1460] 165 304	[2000] 225 303	[2550] 290 302	[3100] 350 300	[3640] 410 296	[4170] 470 292	[4700] 530 288	[5220] 590 283	[5710] 645 276				
[22] 83	[310] 35 337	[870] 100 336	[1420] 160 335	[1970] 225 334	[2500] 280 332	[3050] 345 330	[3590] 405 326	[4140] 465 323	[4680] 530 319	[5200] 590 313	[5680] 640 306				
[25] 95	[260] 30 383	[820] 95 382	[1380] 155 381	[1930] 220 380	[2460] 280 378	[2980] 335 376	[3540] 400 372	[4090] 460 369	[4640] 525 365	[5180] 585 357					
[30] 114		[680] 75 457	[1250] 140 456	[1860] 210 455	[2390] 270 453	[2900] 330 450	[3430] 390 445	[3960] 445 442	[4460] 505 437	[4950] 560 427					
[35] 132			[1110] 125 532	[1740] 195 531	[2270] 255 528	[2790] 315 525	[3340] 375 519	[3910] 440 515	[4400] 495 509						

[3340] 375 519 } Torque [lb-in] Nm Speed RPM

280cm³/r [17.1 in³/r]
ΔPressure Bar [PSI]

Flow LPM [GPM]

	[250] 15	[500] 35	[750] 50	[1000] 70	[1250] 85	[1500] 105	[1750] 120	[2000] 140	[2250] 155	[2500] 170	[2750] 190	[3000] 205	[3250] 225	[3500] 240	[3750] 260
[.5] 1,9	[533] 60 4	[1074] 121 2													
[1] 3,8	[553] 62 12	[1136] 128 12	[1714] 194 12	[2287] 258 11	[2841] 321 11	[3394] 384 11	[3868] 437 10	[4389] 496 10	[4895] 553 10	[6080] 685 8	[5870] 663 6	[368] 720 6	[6811] 770 6	[7239] 818 5	[7654] 865 4
[2] 7,5	[568] 64 26	[1146] 130 26	[1740] 197 25	[2328] 263 25	[2902] 328 24	[3461] 391 24	[3955] 447 23	[4524] 511 22	[2922] 330 21	[5630] 636 20	[6146] 694 19	[6666] 753 17	[7191] 813 17	[7749] 876 15	[8323] 940 13
[4] 15	[579] 65 53	[1167] 132 53	[1771] 200 52	[2374] 268 52	[2962] 335 51	[3557] 402 51	[4139] 468 50	[4712] 532 49	[5285] 597 47	[5848] 661 45	[6395] 722 44	[6946] 785 42	[7502] 848 41	[8020] 906 40	[8471] 957 38
[6] 23	[583] 66 79	[1177] 133 79	[1781] 201 78	[2395] 271 78	[2987] 338 77	[3601] 407 77	[4193] 474 76	[4793] 542 74	[5376] 607 72	[5959] 673 69	[6521] 737 67	[7082] 800 66	[7607] 859 65	[8097] 915 64	
[8] 30	[573] 65 106	[167] 132 106	[1780] 201 105	[2404] 272 105	[3007] 340 104	[3610] 408 104	[4218] 477 102	[4812] 544 101	[5411] 611 99	[5994] 677 96	[6556] 741 94	[7022] 793 92	[7518] 849 90		
[10] 38	[547] 62 134	[1146] 130 133	[1765] 199 133	[2395] 271 131	[2997] 339 131	[3629] 410 130	[4238] 479 129	[4837] 547 127	[5442] 615 126	[6035] 682 122	[6601] 746 119	[7022] 793 115	[7518] 849 111		
[12] 45	[527] 60 161	[1126] 127 160	[1745] 197 186	[2369] 268 158	[2991] 338 157	[3609] 408 157	[4228] 478 156	[4832] 546 154	[5441] 615 152	[6034] 682 148	[6586] 744 144	[6940] 784 141			
[14] 53	[497] 56 187	[1106] 125 187	[1730] 195 186	[2344] 265 186	[2972] 336 185	[3585] 405 184	[4213] 476 182	[4816] 544 180	[5430] 614 178	[6028] 681 174	[6511] 736 170	[6940] 784 166			
[16] 61	[472] 53 214	[1096] 124 214	[1715] 194 213	[2324] 263 212	[2947] 333 211	[3565] 403 210	[4203] 475 208	[4811] 544 206	[5420] 612 203	[5919] 669 199	[6436] 727 195				
[18] 68	[437] 39 241	[1075] 121 241	[1690] 191 240	[2299] 260 239	[2917] 330 237	[3541] 400 236	[4188] 473 234	[4801] 542 231	[5400] 610 229	[5919] 669 224	[6362] 719 219				
[20] 76	[402] 45 268	[1055] 1119 268	[1669] 189 268	[2274] 257 267	[2898] 327 266	[3521] 398 264	[4178] 472 261	[4791] 541 258	[5394] 609 255	[5851] 661 249					
[22] 83	[366] 41 296	[1005] 114 295	[1629] 184 295	[2257] 255 294	[2856] 323 292	[3480] 393 290	[4136] 467 288	[4756] 537 285	[5205] 588 279						
[25] 95	[301] 34 336	[940] 106 336	[1588] 179 335	[2231] 252 334	[2825] 319 333	[3419] 386 331	[4086] 462 328	[4710] 532 325	[5205] 588 314						
[30] 114		[845] 96 402	[1480] 167 401	[2151] 243 400	[2759] 312 398	[3328] 376 396	[3984] 450 392	[4573] 517 389	[5021] 567 377						
[35] 132			[1348] 152 468	[2057] 232 466	[2623] 296 464	[3183] 360 463	[3883] 439 457	[4354] 492 449							

4000 Series

Performance Data

Motors run with high efficiency in all areas designated with a number for torque and speed. For best motor life select a motor to run with a torque and speed range shown in the light shaded area.

Performance data is typical at 120 SUS. Actual data may vary slightly from unit to unit in production.

Continuous

Peak

Intermittent

No Operation

310cm³/r [19.0 in³/r]
ΔPressure Bar [PSI]

Flow LPM [GPM]	[250] 15	[500] 35	[750] 50	[1000] 70	[1250] 85	[1500] 105	[1750] 120	[2000] 140	[2250] 155	[2500] 170	[2750] 190	[3000] 205	[3250] 225	[3500] 240	[3750] 260
[.5] 1,9	[600] 70 4	[1150] 130 2													
[1] 3,8	[620] 70 11	[1270] 145 11	[1920] 215 11	[2560] 290 10	[3170] 360 10	[3780] 425 10	[4290] 485 9	[4900] 555 9	[5490] 620 9	[6080] 685 8	[6670] 755 8	[7270] 820 7	[7880] 890 7	[8490] 960 6	[9080] 1025 5
[2] 7,5	[630] 70 23	[1280] 145 23	[1940] 220 22	[2590] 295 22	[3230] 365 21	[3830] 435 21	[4450] 505 20	[5070] 575 20	[5680] 640 19	[6300] 710 18	[6910] 780 18	[7530] 850 17	[8160] 920 17	[8790] 995 16	[9420] 1065 15
[4] 15	[640] 70 47	[1290] 145 47	[1960] 220 46	[2640] 300 46	[3290] 370 45	[3940] 445 45	[4600] 520 44	[5240] 590 44	[5880] 665 43	[6510] 735 42	[7150] 810 42	[7790] 880 41	[8450] 955 41	[9100] 1030 40	
[6] 23	[650] 75 71	[1300] 145 71	[1970] 225 70	[2660] 300 70	[3320] 375 69	[4000] 450 69	[4680] 530 68	[5330] 600 67	[5980] 675 66	[6630] 750 64	[7280] 825 64	[7940] 895 63			
[8] 30	[640] 70 96	[1300] 145 96	[1980] 225 95	[2670] 300 95	[3350] 380 94	[4030] 455 94	[4710] 530 93	[5360] 605 92	[6020] 680 91	[6670] 755 89	[7320] 825 88				
[10] 38	[620] 70 121	[1280] 145 120	[1970] 225 120	[2660] 300 119	[3340] 375 119	[4070] 460 118	[4740] 535 117	[5390] 610 116	[6050] 685 115	[6710] 760 112	[7370] 835 109				
[12] 45	[600] 70 145	[1260] 140 144	[1940] 220 144	[2630] 295 143	[3340] 375 142	[4040] 455 142	[4730] 535 141	[5390] 610 140	[6060] 685 139	[6720] 760 135					
[14] 53	[570] 65 169	[1240] 140 169	[1920] 215 168	[2600] 295 168	[3310] 375 167	[4000] 450 167	[4710] 530 165	[5380] 610 164	[6060] 685 163	[6730] 760 159					
[16] 61	[540] 60 193	[1230] 140 193	[1900] 215 192	[2580] 290 192	[3280] 370 190	[3970] 450 189	[4700] 530 188	[5380] 610 187	[6050] 685 185						
[18] 68	[490] 55 217	[1210] 135 217	[1880] 210 216	[2550] 290 216	[3240] 365 214	[3930] 445 213	[4680] 530 211	[5370] 605 209	[6040] 680 207						
[20] 76	[450] 50 242	[1190] 135 242	[1860] 210 242	[2520] 285 241	[3210] 365 240	[3900] 440 238	[4670] 530 236	[5360] 605 234	[6030] 680 232						
[22] 83	[420] 45 267	[1130] 130 266	[1820] 205 266	[2520] 285 265	[3180] 360 264	[3870] 440 262	[4640] 525 260	[5320] 600 258							
[25] 95	[340] 40 303	[1050] 120 303	[1780] 200 302	[2510] 285 301	[3160] 355 300	[3820] 430 299	[4590] 520 296	[5280] 595 293							
[30] 114		[1010] 115 363	[1700] 190 362	[2420] 275 360	[3100] 350 359	[3720] 420 358	[4500] 510 354	[5140] 580 351							
[35] 132			[1580] 180 422	[2360] 265 420	[2950] 335 419	[3540] 400 418	[4390] 495 413								

[4390] 495 413 } Torque [lb-in] Nm Speed RPM

395cm³/r [24.0 in³/r]
ΔPressure Bar [PSI]

Flow LPM [GPM]	[250] 15	[500] 35	[750] 50	[1000] 70	[1250] 85	[1500] 105	[1750] 120	[2000] 140	[2250] 155	[2500] 170	[2750] 190	[3000] 205	[3250] 225	[3500] 240
[.5] 1,9	[700] 80 4	[1340] 150 2												
[1] 3,8	[750] 85 9	[1430] 160 9	[2110] 240 8	[2770] 315 8	[3460] 390 8	[4170] 470 7	[4890] 550 7	[5610] 635 7	[6310] 715 5	[7010] 790 4	[7700] 870 2			
[2] 7,5	[800] 90 18	[1500] 170 18	[2290] 260 17	[3030] 340 16	[3850] 435 16	[4620] 520 15	[5310] 600 15	[6000] 680 14	[6750] 765 13	[7490] 845 13	[8240] 930 12	[8990] 1015 11	[9730] 1100 10	[10470] 1185 8
[4] 15	[860] 95 38	[1630] 185 38	[2470] 280 37	[3310] 375 36	[4120] 465 36	[4900] 555 35	[5640] 635 35	[6390] 720 34	[7190] 810 34	[7890] 890 33	[8780] 990 32			
[6] 23	[860] 95 57	[1690] 190 57	[2540] 285 56	[3410] 385 55	[4180] 470 54	[4980] 565 53	[5780] 655 52	[6580] 745 50	[7400] 835 49	[8220] 930 47				
[8] 30	[840] 95 76	[1680] 190 76	[2550] 290 75	[3400] 385 74	[4260] 480 73	[5090] 575 72	[5870] 665 70	[6650] 750 68	[7480] 845 66					
[10] 38	[800] 90 95	[1680] 190 95	[2550] 290 94	[3400] 385 93	[4260] 480 92	[5100] 575 91	[5920] 670 89	[6730] 760 86	[7560] 855 84					
[12] 45	[760] 85 114	[1660] 190 114	[2520] 285 113	[3380] 380 112	[4270] 480 111	[5110] 575 110	[5900] 665 108	[6690] 755 105						
[14] 53	[740] 85 133	[1640] 185 133	[2490] 280 132	[3370] 380 131	[4260] 480 130	[5100] 575 129	[5880] 665 127	[6650] 750 124						
[16] 61	[710] 80 153	[1620] 185 153	[2460] 280 152	[3350] 380 151	[4240] 480 149	[5080] 575 147	[5840] 660 145							
[18] 68	[680] 75 172	[1600] 180 172	[2430] 275 171	[3340] 375 170	[4220] 475 168	[5060] 570 166	[5810] 655 164							
[20] 76	[610] 70 192	[1580] 180 191	[2400] 270 190	[3320] 375 189	[4210] 475 187	[5040] 570 185	[5780] 655 183							
[22] 83	[570] 65 211	[1490] 170 210	[2340] 265 209	[3220] 365 208	[4160] 470 206	[5010] 565 204	[5740] 650 201							
[25] 95	[490] 55 239	[1350] 155 238	[2250] 255 237	[3080] 350 236	[4070] 460 235	[4960] 560 233	[5700] 645 230							
[30] 114		[1080] 120 285	[1650] 185 284	[2270] 255 282	[3020] 340 281	[3850] 435 279								
[35] 132			[1520] 170 331	[2120] 240 330	[2870] 325 328	[3760] 425 325								
[40] 151				[2050] 230 376	[2790] 315 374	[3620] 410 371								

4000 Series

Performance Data

Motors run with high efficiency in all areas designated with a number for torque and speed. For best motor life select a motor to run with a torque and speed range shown in the light shaded area.

Performance data is typical at 120 SUS. Actual data may vary slightly from unit to unit in production.

Continuous

Peak

Intermittent

No Operation

625cm³/r [38.0 in³/r]
ΔPressure Bar [PSI]

Flow LPM [GPM]	[250] 15	[500] 35	[750] 50	[1000] 70	[1250] 85	[1500] 105	[1600] 100	[1700] 115	[1800] 125	[2000] 140
[.5] 1,9	[1000] 115 2									
[1] 3,8	[1080] 120 5	[2340] 265 5	[3600] 405 5	[4850] 550 4	[6100] 690 4	[7350] 830 3	[7820] 885 3	[8290] 935 2	[8760] 990 2	
[2] 7,5	[1085] 125 14	[2380] 270 14	[3675] 415 14	[5010] 565 13	[6350] 715 12	[7625] 860 11	[8115] 915 10	[8605] 970 9	[9095] 1030 8	[10075] 1140 7
[4] 15	[1090] 125 23	[2420] 275 23	[3750] 425 23	[5175] 585 22	[6600] 745 21	[7900] 895 19	[8410] 950 18	[9000] 1015 17	[9590] 1085 16	[10450] 1180 14
[6] 23	[1095] 125 35	[2460] 280 35	[3825] 430 35	[5220] 590 34	[6620] 750 33	[7950] 900 31	[8430] 950 30	[8910] 1005 29	[9490] 1070 28	
[8] 30	[1100] 125 48	[2500] 280 48	[3900] 440 47	[5270] 595 46	[6640] 750 45	[7990] 905 43	[8460] 955 43	[8925] 1010 42		
[10] 38	[1130] 130 60	[2550] 290 60	[3975] 450 59	[5320] 600 58	[6670] 755 57	[8045] 910 54	[8595] 970 53	[9150] 1035 52		
[12] 45	[1160] 130 72	[2600] 295 72	[4050] 460 71	[5375] 605 70	[6700] 755 69	[8100] 915 65	[8660] 980 64			
[14] 53	[1105] 125 84	[2535] 285 84	[3965] 450 83	[5325] 600 82	[6685] 755 81	[8065] 910 77	[8620] 975 76			
[16] 61	[1050] 120 96	[2465] 280 95	[3880] 440 95	[5275] 595 94	[6670] 755 93	[8035] 910 89	[8580] 970 88			
[18] 68	[990] 110 108	[2405] 270 107	[3825] 430 107	[5240] 590 105	[6655] 750 104	[7345] 830 100				
[20] 76	[930] 105 121	[2350] 265 120	[3770] 425 120	[5205] 590 118	[6640] 750 116					
[25] 95	[750] 85 151	[2175] 245 150	[3600] 405 149	[5000] 565 147	[6400] 725 146					
[30] 114	[550] 60 181	[1975] 225 180	[3400] 385 179	[4800] 530 177	[6200] 700 176					
[35] 132			[3125] 355 210	[4545] 515 208						
[40] 151			[2850] 320 241	[4295] 485 239						

495cm³/r [30.0 in³/r]
ΔPressure Bar [PSI]

Flow LPM [GPM]	[250] 15	[500] 35	[750] 50	[1000] 70	[1250] 85	[1500] 105	[1750] 120	[2000] 140	[2250] 155	[2500] 170
[.5] 1,9	[800] 90 3	[1750] 200 1								
[1] 3,8	[880] 100 7	[1875] 210 6	[2875] 325 6	[3825] 430 5	[4775] 540 4	[5720] 645 3	[6670] 755 2	[7600] 860 1		
[2] 7,5	[905] 100 18	[1940] 220 17	[2975] 335 17	[3990] 450 16	[5010] 565 15	[6010] 680 12	[7010] 790 11	[8000] 905 10	[8980] 1015 8	
[4] 15	[935] 105 30	[2005] 225 29	[3075] 345 28	[4160] 470 27	[5245] 595 26	[6300] 710 23	[7355] 830 21	[8375] 945 19	[9400] 1060 17	[10350] 1170 14
[6] 23	[920] 105 45	[2010] 225 44	[3100] 350 43	[4185] 475 42	[5265] 595 40	[6345] 715 37	[7420] 840 35	[8445] 955 32	[9465] 1070 30	
[8] 30	[905] 100 61	[2015] 230 60	[3125] 355 59	[4205] 475 57	[5290] 600 55	[6385] 720 52	[7485] 845 49	[8510] 960 46		
[10] 38	[880] 100 76	[1995] 225 75	[3095] 350 74	[4205] 475 72	[5295] 600 70	[6390] 720 66	[7480] 845 63	[8525] 960 59		
[12] 45	[860] 95 91	[1975] 225 90	[3095] 350 89	[4200] 475 87	[5305] 600 85	[6390] 720 81	[7475] 845 77			
[14] 53	[830] 95 106	[1945] 220 105	[3055] 345 104	[4165] 470 102	[5275] 595 100	[6360] 720 96	[7445] 840 92			
[16] 61	[805] 90 122	[1910] 215 120	[3020] 340 119	[4130] 465 117	[5245] 595 115	[6330] 715 111	[7420] 840 107			
[18] 68	[740] 85 137	[1860] 210 136	[2980] 335 134	[4105] 465 132	[5235] 590 130	[6305] 715 125	[7380] 835 121			
[20] 76	[680] 75 153	[1810] 205 152	[2940] 330 150	[4085] 460 147	[5225] 590 145	[6285] 710 140				
[25] 95	[570] 65 191	[1665] 190 189	[2800] 315 187	[4005] 455 184	[5210] 590 182	[6135] 695 177				
[30] 114		[1520] 170 228	[2645] 300 226	[3765] 425 223	[4885] 550 220	[5985] 675 215				
[35] 132			[2400] 270 265	[3510] 395 263						
[40] 151			[2155] 245 305	[3260] 370 303						

[2850] 320 241 } Torque [lb-in] Nm Speed RPM

C-4

4000 Series

Dimensions

Standard Mount

Ports

1 1/16 -12 UN-2B SAE O-ring Staggered Ports (2)
7/16 -20 UNF-2B SAE O-ring Case Drain Port (1) or

4 Bolt 3/4 inch Split Flange Ports (2)
7/16 -20 UNF-2B SAE O-ring Case Drain Port (1) or

G 3/4 (BSP) Staggered Ports (2)
G 1/4 (BSP) Case Drain Port (1)

Standard Rotation Viewed from Shaft End

Port A Pressurized — CW
Port B Pressurized — CCW

Standard Mount

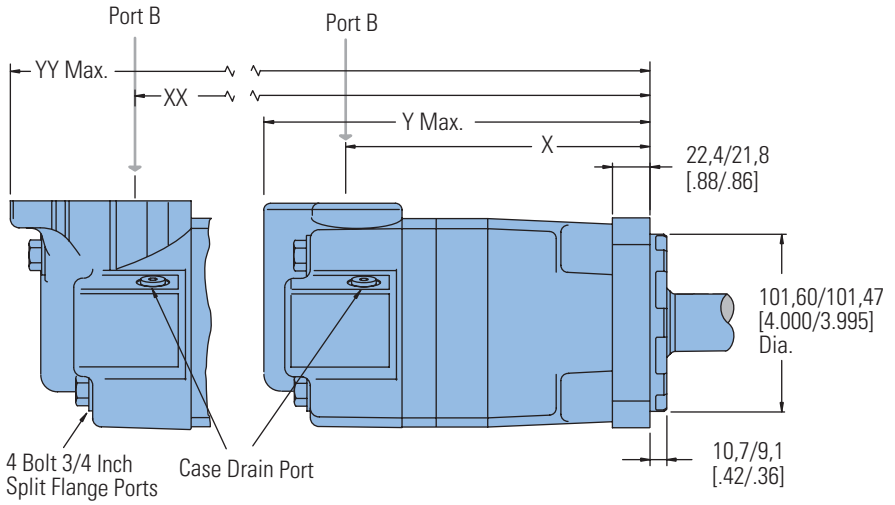

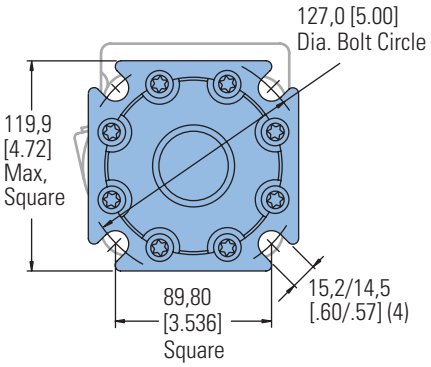

SAE C Flange

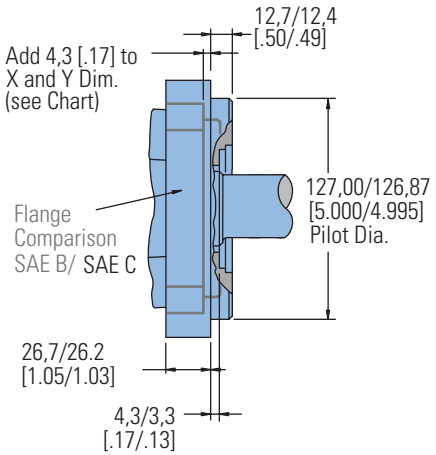

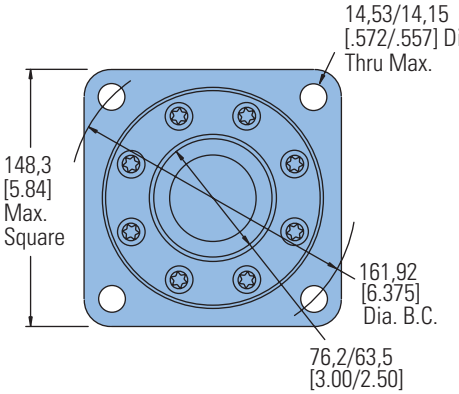

STANDARD MOUNT MOTOR DIMENSIONS

Displacement cm^3/r [in^3/r]	X mm [inch]	Y mm [inch]	XX mm [inch]	YY mm [inch]
110 [6.7]	158,3 [6.23]	214,4 [8.44]	167,3 [6.59]	246,3 [9.70]
130 [7.9]	162,3 [6.39]	218,4 [8.60]	171,3 [6.75]	250,4 [9.86]
160 [9.9] [10.11]	168,7 [6.64]	224,7 [8.85]	177,7 [7.00]	256,7
205 [12.5] [10.44]	177,2 [6.98]	233,2 [9.18]	186,2 [7.33]	265,2
245 [15.0] [10.11]	168,7 [6.64]	224,7 [8.85]	177,7 [7.00]	256,7
310 [19.0] [10.44]	177,2 [6.98]	233,2 [9.18]	186,2 [7.33]	265,2
395 [24.0] [10.86]	187,9 [7.40]	243,9 [9.60]	196,9 [7.75]	275,9
495 [30.0]	200,7 [7.90]	256,8 [10.11]	209,7 [8.26]	288,8 [11.37]
625 [38.0]	217,8 [8.58]	273,9 [10.78]	226,7 [8.93]	305,9 [12.04]

4000 Series

Dimensions

Wheel Mount

Ports

1 1/16 -12 UN-2B SAE O-ring Staggered Ports (2)
7/16 -20 UNF-2B SAE O-ring Case Drain Port (1) or

4 Bolt 3/4 inch Split Flange Ports (2)
7/16 -20 UNF-2B SAE O-ring Case Drain Port (1) or

G 3/4 (BSP) Staggered Ports (2)
G 1/4 (BSP) Case Drain Port (1)

Standard Rotation Viewed from Shaft End

Port A Pressurized — CW
Port B Pressurized — CCW

Wheel Mount

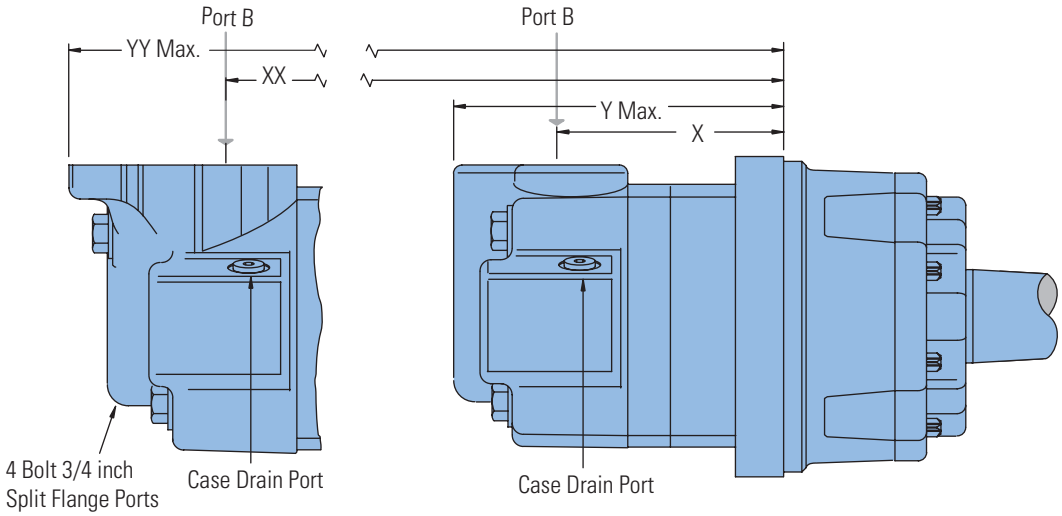

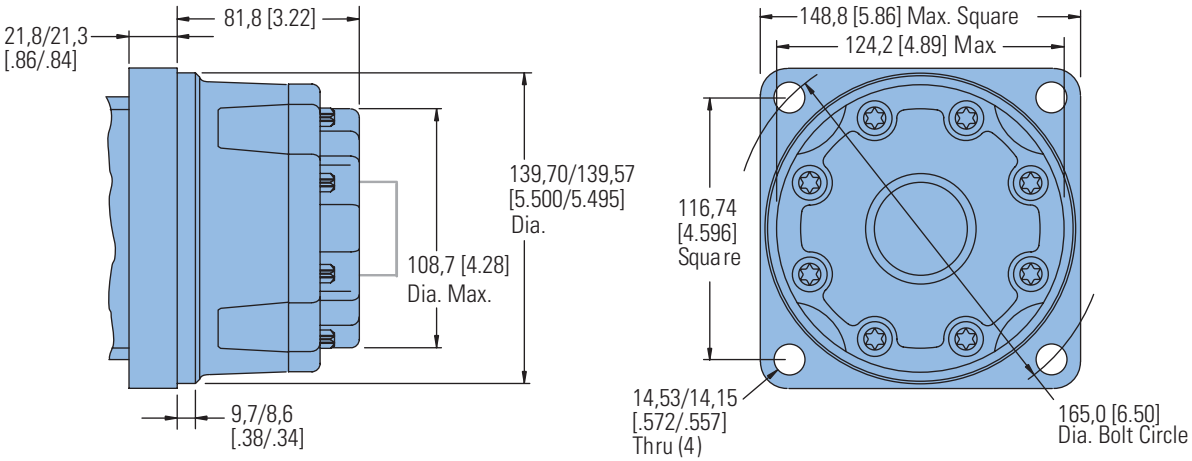

WHEEL MOUNT MOTOR DIMENSIONS

Displacement cm³/r [in³/r]	X mm [inch]	Y mm [inch]	XX mm [inch]	YY mm [inch]
110 [6.7]	87,5 [3.45]	143,3 [5.64]	96,4 [3.80]	175,3 [6.90]
130 [7.9]	91,6 [3.61]	147,3 [5.80]	100,5 [3.96]	179,3 [7.06]
160 [9.9]	97,8 [3.85]	153,7 [6.05]	106,8 [4.21]	185,7 [7.31]
205 [12.5]	106,4 [4.19]	162,3 [6.39]	115,4 [4.55]	194,3 [7.65]
245 [15.0]	97,8 [3.85]	153,7 [6.05]	106,8 [4.21]	185,7 [7.31]
310 [19.0]	106,4 [4.19]	162,3 [6.39]	115,4 [4.55]	194,3 [7.65]
395 [24.0]	117,1 [4.61]	173,0 [6.81]	126,1 [4.97]	205,0 [8.07]
495 [30.0]	129,9 [5.12]	185,7 [7.31]	138,8 [5.47]	217,7 [8.57]
625 [38.0]	146,9 [5.79]	202,9 [7.99]	156,0 [6.14]	235,0 [9.25]

4000 Series

Dimensions

Bearlingless

Ports

1 1/16 -12 UN-2B SAE O-ring Staggered Ports (2)
7/16 -20 UNF-2B SAE O-ring Case Drain Port (1) or

4 Bolt 3/4 inch Split Flange Ports (2)
7/16 -20 UNF-2B SAE O-ring Case Drain Port (1) or

G 3/4 (BSP) Staggered Ports (2)
G 1/4 (BSP) Case Drain Port (1)

Standard Rotation Viewed from Shaft End

Port A Pressurized — CW
Port B Pressurized — CCW

Bearingless

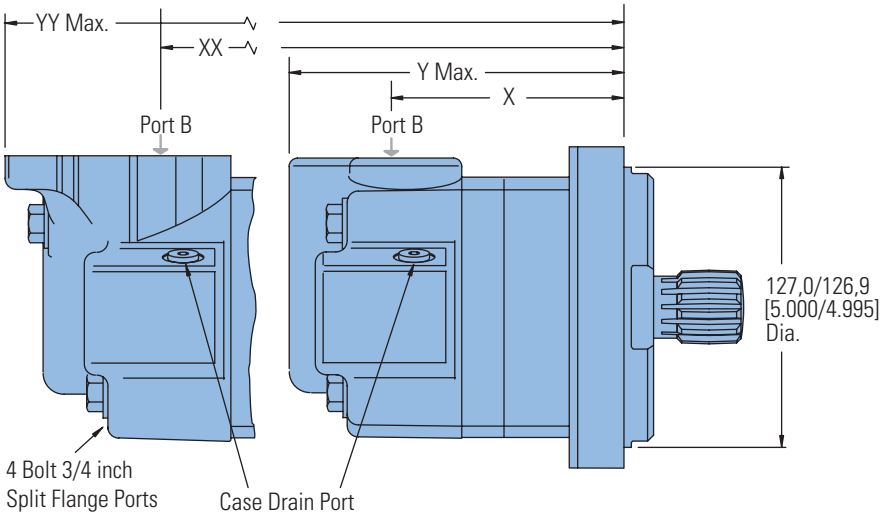

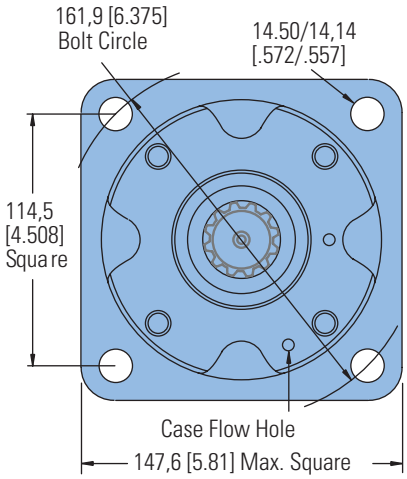

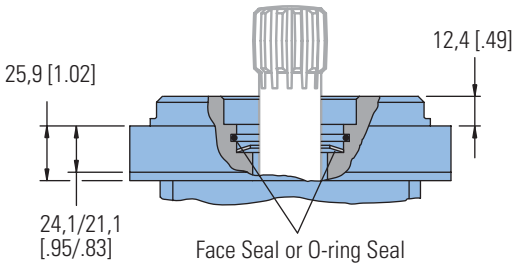

For 4000 Series Bearingless Motor application information contact your Eaton representative (mating coupling blanks available from Eaton Hydraulics).

Note:

After machining blank, part must be hardened per Eaton specification.

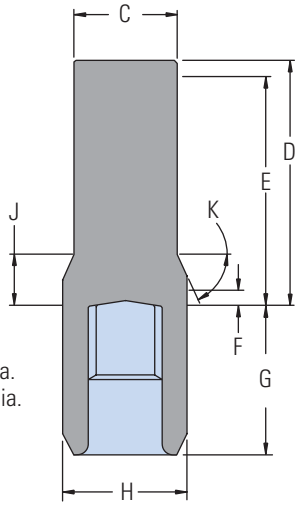

C 47,2 [1.86] Dia.
D 112,5 [4.43] Max.
E 107,4 [4.23] Full Form Dia.
F 7,4 [.29]Min. Full Form Dia.
G 68,8 [2.71] Max.
H 56,9 [2.24] Dia.
J 18,29 [.720]
K 38°

Mating Coupling Blank
Eaton Part No. 12745-003

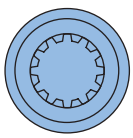

BEARINGLESS MOTOR DIMENSIONS

Displacement cm³/r [in³/r]	X mm [inch]	Y mm [inch]	XX mm [inch]	YY mm [inch]
110 [6.7]	91,0 [3.58]	146,8 [5.78]	100,1 [3.94]	178,8 [7.04]
130 [7.9]	95,0 [3.74]	150,8 [5.94]	104,1 [4.10]	182,9 [7.20]
160 [9.9]	101,4 [4.00]	157,1 [6.19]	110,5 [4.35]	189,2 [7.45]
205 [12.5]	109,9 [4.33]	165,7 [6.52]	118,9 [4.68]	197,6 [7.78]
245 [15.0]	101,4 [4.00]	157,1 [6.19]	110,5 [4.35]	189,2 [7.45]
310 [19.0]	109,9 [4.33]	165,7 [6.52]	118,9 [4.68]	197,6 [7.78]
395 [24.0]	120,6 [4.75]	176,3 [6.94]	129,5 [5.10]	208,3 [8.20]
495 [30.0]	133,5 [5.26]	189,2 [7.45]	142,5 [5.61]	221,2 [8.71]
625 [38.0]	150,5 [5.93]	206,3 [8.12]	159,5 [6.28]	238,3 [9.38]

4000 Series

Installation Information

Bearingless

1 Internal spline in mating part to be as follows: Material to be ASTM A304, 8620H. Carbonize to a hardness of 60-64 HRc with case depth (to 50HRc) of 0,076 - 1,27 [.030 - .050] (dimensions apply after heat treat).

2 Mating part to have critical dimensions as shown. Oil holes must be provided and open for proper oil circulation.

3 Seal to be furnished with motor for proper oil circulation thru splines.

4 Some means of maintaining clearance between shaft and mounting flange must be provided.

5 Counterbore designed to adapt to a standard sleeve bearing 50,010 - 50,040 [1.9689 - 1.9700] ID by 60,050 - 60,080 [2.3642 - 2.3653] (Oilite bronze sleeve bearing).

6 Similar to SAE "C" Four Bolt Flange.

7 52,8 [2.08] Max. dimension to be maintained when assembling shipping and installing unit to insure valve drive engagement with valve (this is required on displacement code number 24 only).

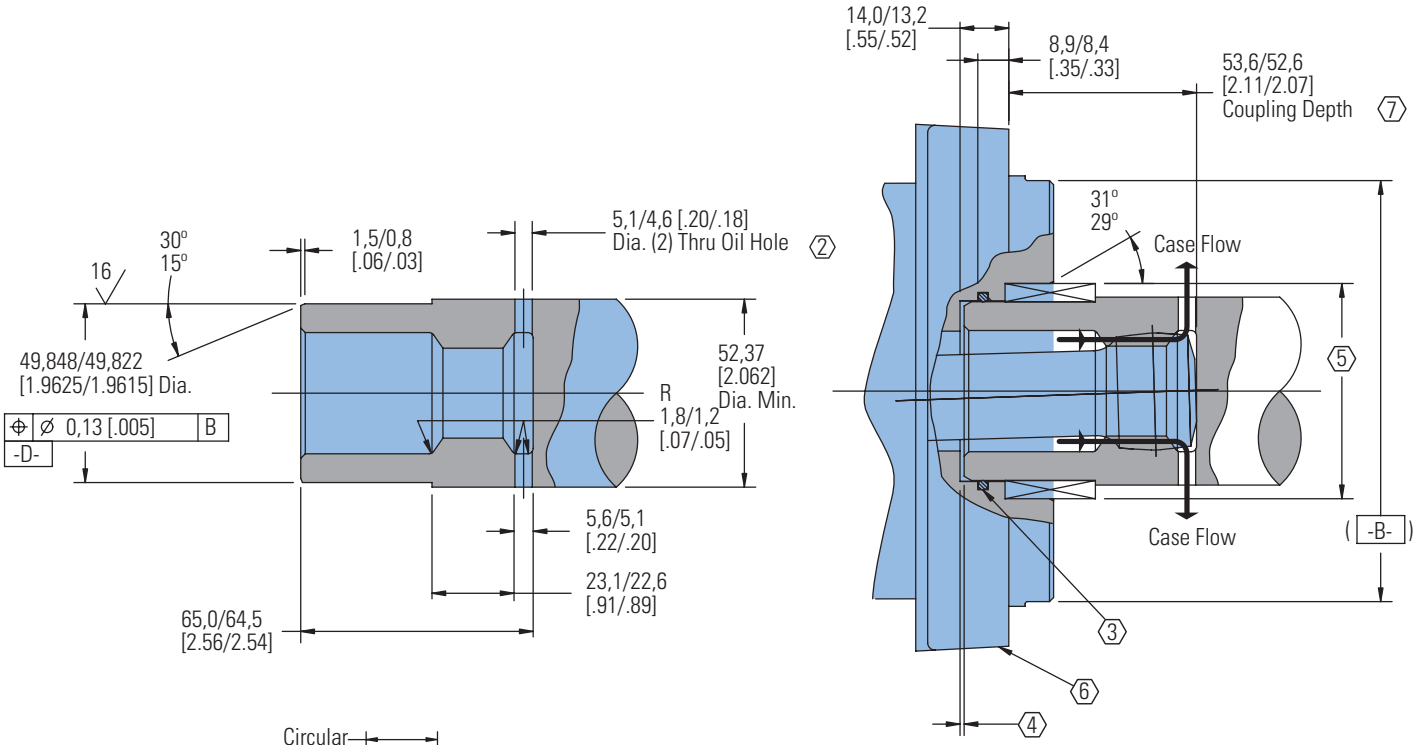

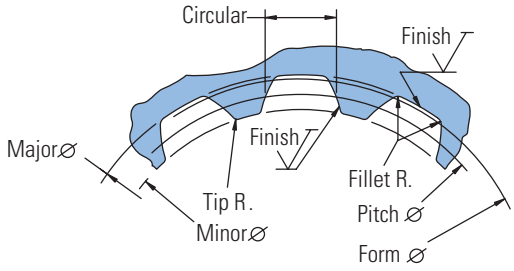

Spline Pitch	10/20
Pressure Angle	30°
Number of teeth	12
Class of Fit	Ref. 5
Type of Fit	Side
Pitch Diameter	Ref. 30,480000 [1.2000000] ⌖ 0,20 [.008] D
Base Diameter	Ref. 26,396455 [1.0392305]
Major Diameter	33,43 [1.316] Max. 33,23 [1.308] Min.
Min. Minor Diameter	28,40 - 28,58 [1.118 - 1.125]
Form Diameter, Min.	32,59 [1.283]
Fillet Radius	0,63 - 0,76 [.025 - .030]
Tip Radius	0,26 - 0,51 [.010 - .020]
Finish	1,6 (63)
Involute Profile Variation	+0,000 -0,025 [+.0000 -.0010]
Total Index Variation	0,038 [.0015]
Lead Variation	0,013 [.0005]
Circular Space Width:	
Maximum Actual	5,045 [.1986]
Minimum Effective	4,995 [.1951]
Maximum Effective	Ref. 5,009 [.1972]
Minimum Actual	Ref. 4,986 [.1963]
Dimension Between Two Pins	Ref. 22,783 - 22,929 [.8970 - .9027]
Pin Diameter	5,334 [.2100] Pins to Have 3,73 [.147] Wide Flat for Root Clearance

4000 Series

Dimensions

Shafts

1 1/4 Inch Straight

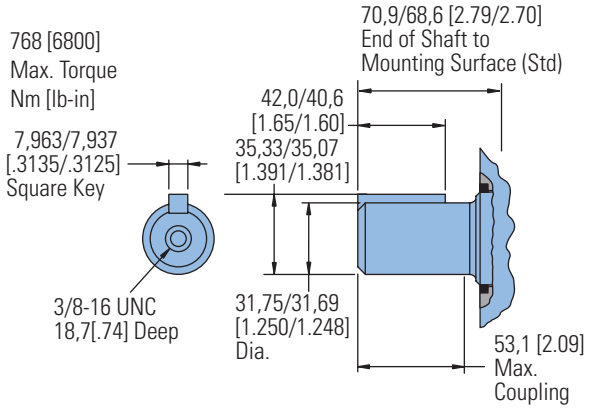

1 1/4 -14 Tooth Splined

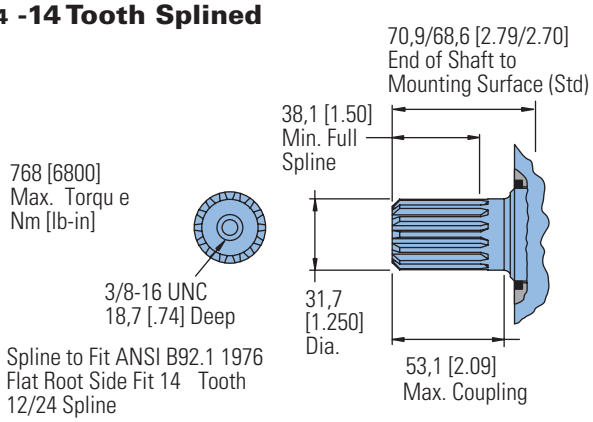

1 5/8 Tapered

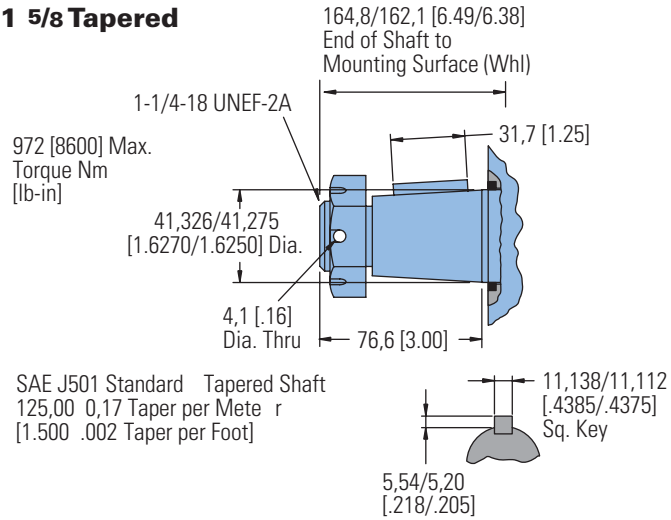

40 mm Straight

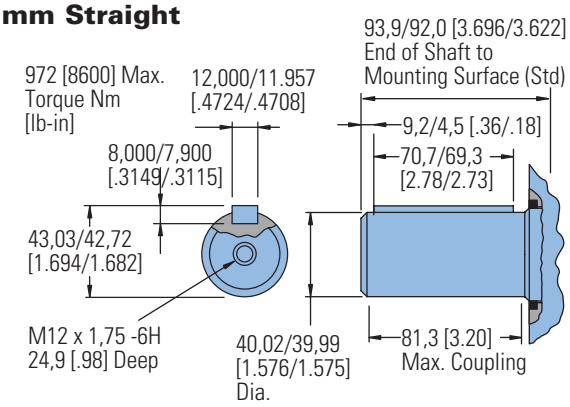

Tapered Shaft Hub Data

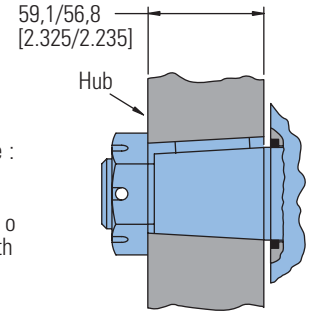

Recommended Torque :
(645 Nm [475 lb-ft] Dry)
(510 Nm [375 lb-ft] Lub)
Plus Torque required t o
align the slotted nut with
the Shaft Crosshole.

1 1/2 Inch 17-Tooth Splined

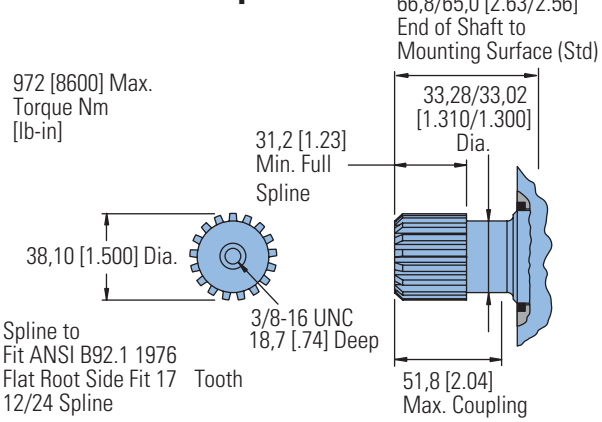

Slotted Hexagon Nut

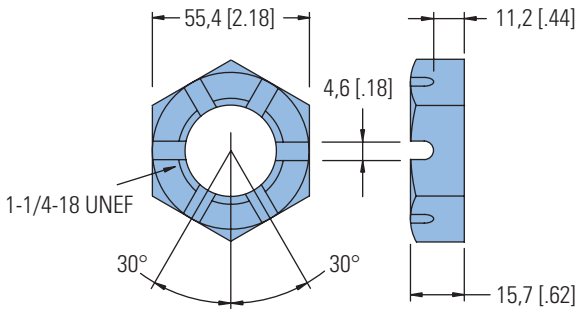

4000 Series

Shaft Side Load Capacity

These curves indicate the radial load capacity on the motor shaft(s) at various locations with an allowable external thrust load of 454 kg [1000 lb].

Note:

Case pressure will increase the allowable Inward thrust load and decrease the allowable outward thrust load. Case pressure will push outward on the shaft at 94 kg/7 Bar [208 lb/100 PSI].

Each curve is based on

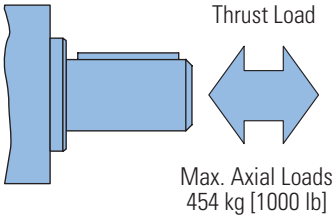

B 10 bearing life (2000 hours of 12,000,000 shaft revolutions at 100 RPM) at rated output torque.
To determine radial load at speeds other than 100 RPM, multiply the load values given on the bearing curve by the factors in the chart below.

RPM	Multiplication Factor
50	1.23
100	1.00
200	0.81
300	0.72
400	0.66
500	0.62
600	0.58
700	0.56
800	0.54

For 3,000,000 shaft revolutions or 500 hours–Increase these shaft loads 52%.

Standard Motor
Straight and Splined Shafts

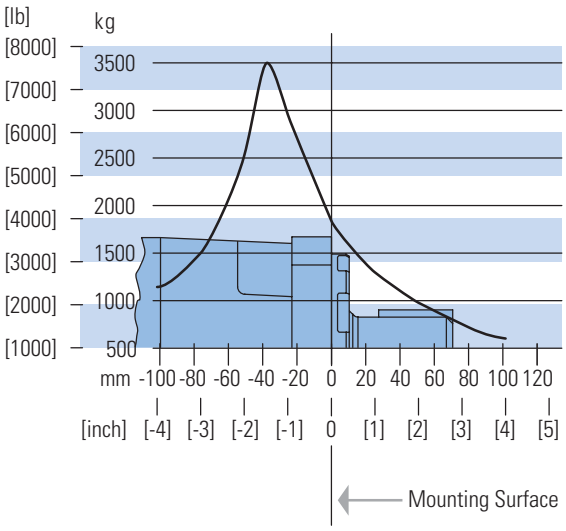

Wheel Motor Tapered Shaft

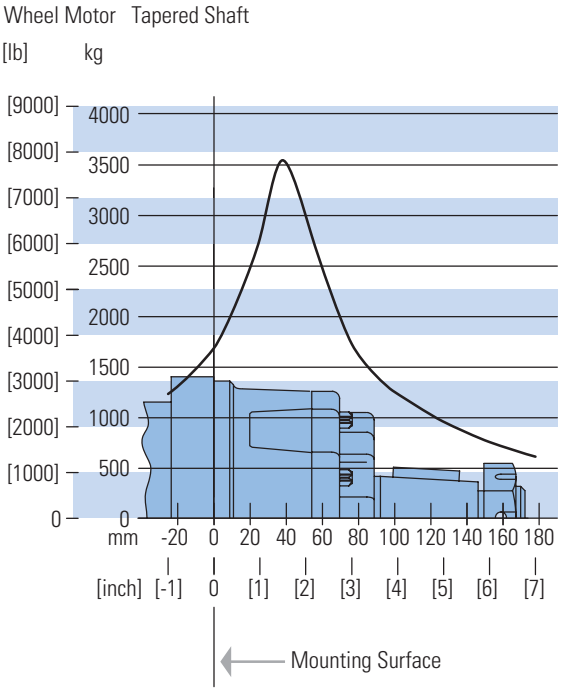

C-4

Char-Lynn 4000 Series motors are durable and have long life as long as the recommended case pressure is not exceeded. Allowable case pressure is highest at low shaft speeds. Consequently, motor life will be shortened if case pressure exceeds these ratings (acceptability may vary with application). Determine if an external case drain is required from the case pressure seal limitation chart.

Case Pressure Seal Limitation

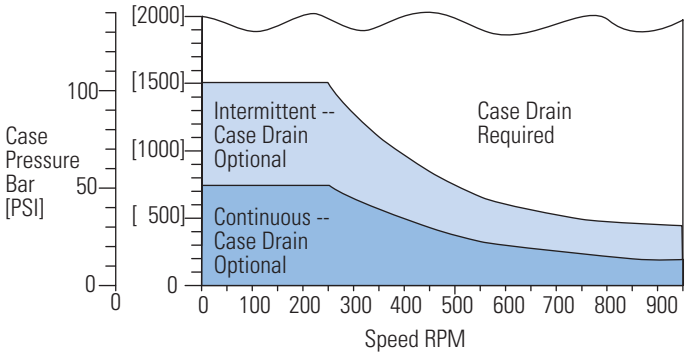

Case Porting Advantage

Contamination Control — flushing the motor case.

Cooler Motor — exiting oil draws motor heat away.

Extend Motor Seal Life — maintain low case pressure with a preset restriction in the case drain line.

1-1/16-12 O-ring Ports (2) or G 3/4 (BSP) Ports (2)

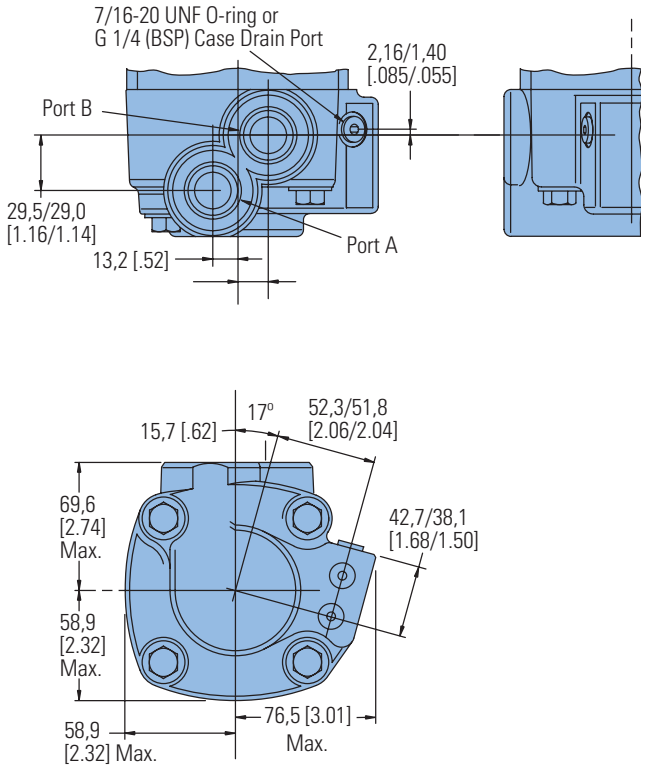

4 Bolt 3/4 Inch Split Flange Ports to Fit SAE J518 c (2)

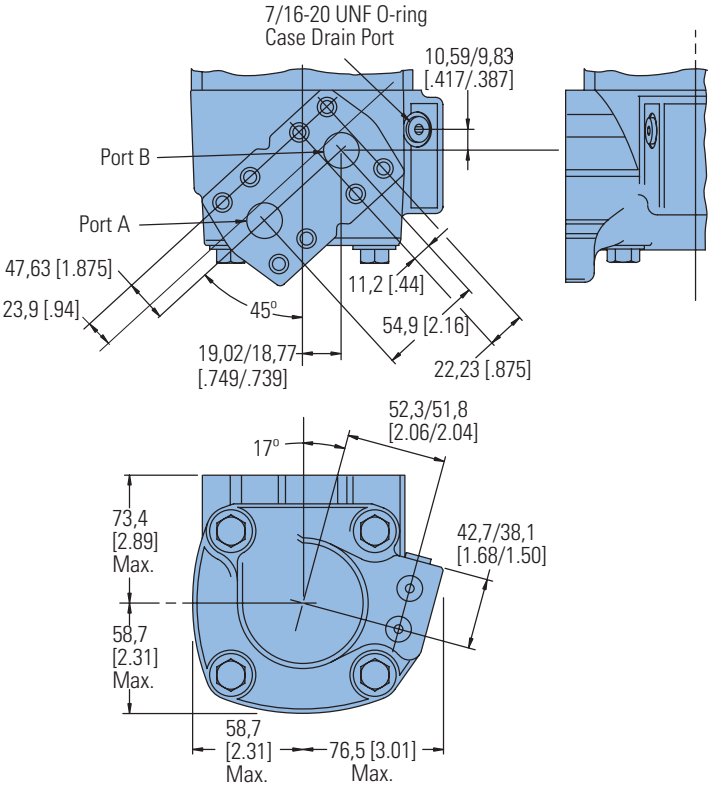

7/8-14 O-ring Ports (2) or M22 x 1,5-6H Ports (2)

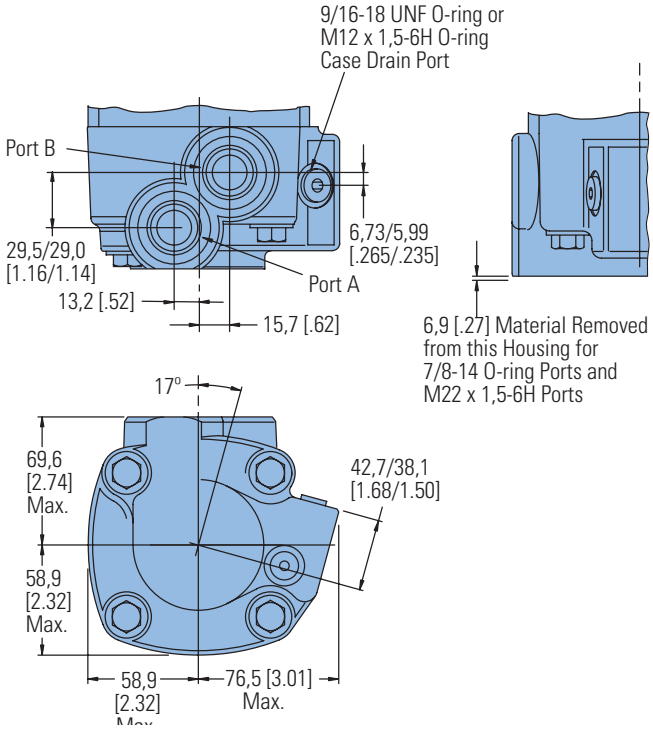

C-4

4000 Series

Product Numbers

Note:

For 4000 Series Motors with a configuration **Not Shown** in the charts below: Use model code number system on the next page to specify product in detail.

Use digit prefix —109-, 110-, or 111- plus four digit number from charts for complete product number— Example 111-1057.

Orders will not be accepted without three digit prefix.

MOUNTING		SHAFT	PORT SIZEDISPL. cm^3/r [in^3/r] / PRODUCT NUMBER									
			110 [6.7]	130 [7.9]	160 [9.9]	205 [12.5]	245 [15.0]	280* [17.1]	310 [19.0]	395 [24.0]	495 [30.0]	625 [38.0]
Standard SAE B-Mount	1 1/4 Inch Straight	1 1/16 O-ring	109-1100	-1101	-1102	-1103	-1104	-1094	-1105	-1106	-1212	-1215
		3/4 inch Split Flange	109-1001	-1054	-1002	-1003	-1055	—	-1056	-1057	—	—
	1 5/8 Inch Tapered	1 1/16 O-ring	109-1107	-1108	-1109	-1110	-1111	—	-1112	-1113	-1479	-1455
		3/4 inch Split Flange	109-1006	-1058	-1007	-1008	-1059	—	-1402	-1061	—	—
	1 1/4 Inch 14 T Splined	1 1/16 O-ring	109-1114	-1115	-1116	-1117	-1118	—	-1119	-1120	—	—
		3/4 inch Split Flange	109-1011	-1062	-1012	-1013	-1063	—	-1064	-1065	—	—
Standard SAE C-Mount	40 mm Straight	G 3/4 (BSP)	109-1184	-1185	-1227	-1224	-1225	—	-1189	-1190	—	—
	1 1/4 Inch 17 T Splined	G 3/4 (BSP)	109-1191	-1192	-1193	-1194	-1195	—	-1196	-1197	—	—
Wheel Motor	1 1/4 Inch Straight	1 1/16 O-ring	110-1074	-1075	-1076	-1077	-1078	—	-1079	-1080	—	-1122
		3/4 inch Split Flange	110-1001	-1040	-1002	-1003	-1041	—	-1042	-1043	—	—
	40 mm Straight	G 3/4 (BSP)	110-1108	-1109	-1110	-1111	-1112	—	-1113	-1125	—	—
	1 5/8 Inch Tapered	1 1/16 O-ring	110-1081	-1082	-1083	-1084	-1085	—	-1086	-1087	1116	-1117
		3/4 inch Split Flange	110-1006	-1044	-1007	-1008	-1045	—	-1046	-1047	—	—
	1 1/4 Inch 14 T Splined	1 1/16 O-ring	110-1088	-1089	-1090	-1091	-1092	—	-1093	-1094	—	—
		3/4 inch Split Flange	110-1011	-1048	-1012	-1013	-1049	—	-1050	-1051	—	—
Bearingless		1 1/16 O-ring	111-1033	-1034	-1035	-1036	-1037	—	-1038	-1039	-1062	-1063
		3/4 inch Split Flange	111-1044	-1015	-1045	-1046	-1016	—	-1017	-1018	—	—
		G 3/4 (BSP)	111-1052	-1053	-1054	-1055	-1056	—	-1057	-1058	—	—

* New Release

111-1057

4000 Series

Model Code

The following 30-digit coding system has been developed to identify all of the configuration options for the 4000 Series motor. Use this model code to specify a motor with the desired features. All 30 digits of the code must be present when ordering. You may want to photocopy the matrix below to ensure that each number is entered in the correct box.

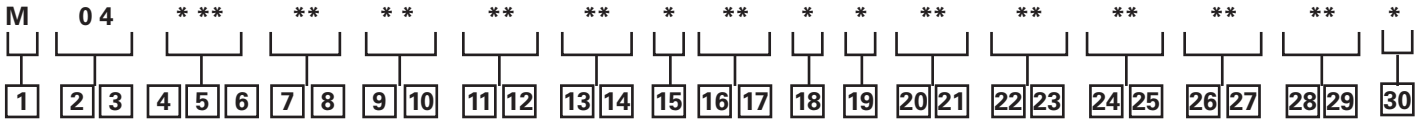

1 Product
M - Motor

2, 3 Series
04 – 4000 Series

4, 5, 6 Displacement cm³/r [in³/r]
067 - 109.8 cm³/r[6.70 in³/r]
080 - 130.3 cm³/r [7.95 in³/r]
099 - 162.2 cm³/r [9.90 in³/r]
125 - 205.5 cm³/r [12.54 in³/r]
150 - 246.3 cm³/r [15.03 in³/r]
171 - 280.1 cm³/r [17.09 in³/r]
190 - 311.8 cm³/r [19.03 in³/r]
225 - 369.0 cm³/r [22.52 in³/r]
240 - 393.9 cm³/r [24.04 in³/r]
301 - 492.6 cm³/r [30.06 in³/r]
342 - 560.2 cm³/r [34.18 in³/r]
381 - 623.9 cm³/r [38.07 in³/r]

7, 8 Mounting Type
AA – Bearingless, 4 Bolt: 127.00 [5.000] Pilot Dia. 14.27 [.562] Dia. Holes on 161.92 [6.375] Dia. Bolt Circle
AB – Standard, 4 Bolt: 101.60 [4.000] Pilot Dia. 14.7 [.58] Slots on 127.00 [5.000] Dia. Bolt Circle. (SAE B)
AC – Wheel, 4 Bolt: 139.70 [5.500] Pilot Dia. 14.27 [.562] Dia. Holes on 165.10 [6.500] Dia. Bolt Circle.
AD – Wheel, 4 Bolt: 127.00 [5.000] Pilot Dia. .500-13 UNC-2B Threaded Holes on 147.62 [5.812] Dia. Bolt circle.
AF – Standard, 4 Bolt: 127.00 [5.000] Pilot Dia. 14.27 [.562] Dia. Holes on 161.92 [6.375] Dia. Bolt Circle. (SAE C)
AH – Standard: ISO Flange 125 B4hw (ISO 3019/2) 124.97 [4.920] Pilot Dia. 14.27 [.562] Dia. Holes on 160.00 [6.299] Dia. Bolt Circle
AP – Wheel, 4 Bolt: 160.0 [6.30] Pilot Dia. with 5.8 [.23] Pilot Length and 18.00 [.709] Dia Holes on 200.00 [7.874] Bolt Circle (ISO Compatible)

9, 10 Output Shaft
00 – None (Bearingless)
01 – 31.75 [1.250] Dia. Straight With .375-16UNC-2B Thread, 53.1 [2.09] Max Coupling Length, 7.938 [.3125] Sq x 41.27 [1.625] Straight Key
02 – 41.28 [1.625] Dia. Tapered with 11.112 [.4375] Sq x 31.75 [1.250] Straight Key, 1.250-18UNEF-2A Thread with Slotted Hex Nut
03 – 31.75 [1.250] Dia. Flat Root Side Fit, 14 Tooth, 12/24 DP 30° Involute Spline, 38.1 [1.50] Minimum Full Spline Length with .375-16UNC-2B Thread
10 – 38.10 [1.500] Dia. Flat Root Side Fit, 17 Tooth, 12/24 DP 30°. Involute Spline, 31.2 [1.23] Minimum Full Spline Length, with .375-16 UNC-2B Thread in End
11 – 40.00 [1.575] Dia. Straight with M12 x 1.75-6H Thread, 7.955 [.3132] x 11.979 [.4716] Wide X 69.98 [2.755] Straight Key
21 – 40.00 [1.575] Dia. 10:1 Tapered Shaft per ISO R775 with .750-16 UNF-2B Threaded in End, 12W x 8H 70L [.472W x .313H x 2.76L] Key
22 – None (Bearingless) European Spline
25 – 42.00 [1.654] Dia. 10:1 Tapered Shaft per ISO R775 with .750-16 UNF-2B Thread in End, 12W x 8H X 63L [.472W X .313H X 2.48L] Key

11, 12 Ports
AA – .875-14 UNF-2B SAE O-Ring Ports - Staggered Ports
AB – 1.0625-12 UN-2B SAE O-Ring Ports - Staggered Ports
AC – G 3/4 Ports - Staggered Ports
AD – 19.05 [.750] 4 Bolt Split Flange Staggered Ports Standard Pressure Series (Code 61)
AE – M22 X 1.5-6H O-Ring Port - Staggered Ports
AG – 12.70 [.500] Dia. Manifold Ports
AJ – Dash 12 Stc Type II+ (Snap to Connect) Ports - Staggered Ports

13, 14 Case Flow Options
00 – None
01 – .5625-18 UNF-2B SAE O-Ring Port with Shuttle
02 – .4375-20 UNF-2B SAE O-ring Port with Check Valve
03 – G 1/4 BSP Straight Thread with Check Valve
06 – .4375-20 UNF-2B SAE O-ring Port with Reverse Flow Shuttle
10 – Dash 6 Stc Type II + (Snap to Connect) Port

15 Low Pressure Relief
0 – None
A – Set at 4.5 Bar [65 lbf/in²]
B – Set at 15.2 Bar [220 lbf/in²]

16, 17 Pressure/Flow Option
00 – None

18 Geroler Option
0 – Standard

19 Seal Option
00 – Standard Seals
02 – Seal Guard
03 – Viton Seals
04 – Viton Shaft Seal
11 – High pressure shaft seal, slinger seal
19 – Extreme duty seal guard

20, 21 Accessories
00 – None
AC – M 12 Threaded Connector, Long Body Digital Speed and Direction Pickup (Two 36 Pulse Signals in Quadrature per Revolution Pin 1=Power Supply, Pin 2=Output Signal 1, Pin 3=Common, Pin 4=Output Signal 2)
AD – M 12 Threaded Connector, Digital Speed And Direction Pickup (One 72 Pulse per Rev Speed Signal and One Directional Signal (Pin 1=Power, Pin 2=Direction, Pin 2=Common, Pin 4=Speed)

22, 23 Special Features (Hardware)
00 – None
17 – Low Noise Valve Plate

24, 25 Special Features (Assembly)
00 – None

26, 27 Paint/Packaging
00 – No Paint, Individual Box
AA – Low Gloss Black Primer, Individual Box
AB – Epoxy Coated (Frost Gray), Individual Box

28, 29 Customer Identification
00 – None

30 Design Code
F – Sixth

Feature in **bold** are preferred and allow for shorter lead time.

6000 Series

Highlights

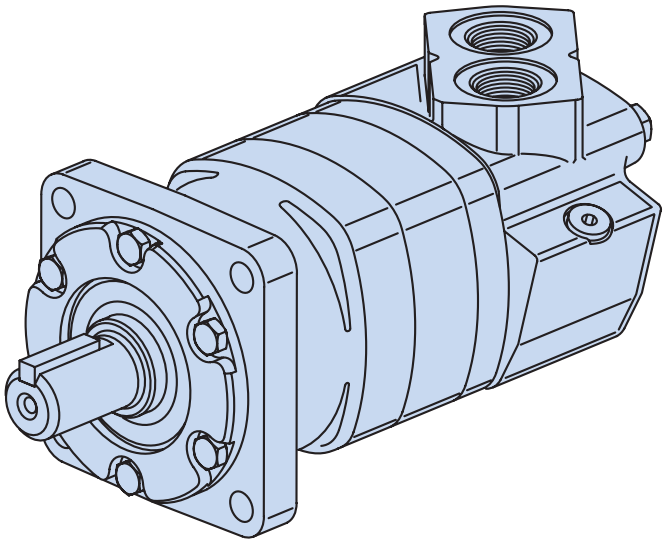

Features

- 9 displacements available
- Presents a multitude of options that make this motor very “smart” and flexible to apply

Benefits

- Very tough motor for demanding applications
- Can be used in a multitude of industries
- Very easy/flexible to integrate in a system

Applications

- Mobile equipment
- Snow Removal, mowing
- Spayer, trencher
- Wood products

Description

With torque up to 15,000 in-lb and 40 gpm continuous, this motor is packed with power operates very smoothly.

Specifications

Geroler Element	9 Displacements
Flow l/min [GPM]	150 [40] Continuous**
	225 [60] Intermittent*
Speed RPM	775 Cont.**
	866 Inter.*
Pressure bar [PSI]	200 [3000] Cont.**
	300 [4500] Inter.*
Torque Nm [lb-in]	1685 [14920] Cont.**
	1875 [16580] Inter.*

** Continuous — (Cont.) Continuous rating, motor may be run continuously at these ratings.
* Intermittent — (Inter.) Intermittent operation, 10% of every minute.

C-5


Mowing


Snow Removal


Sprayer


Trencher

6000 Series

Specifications

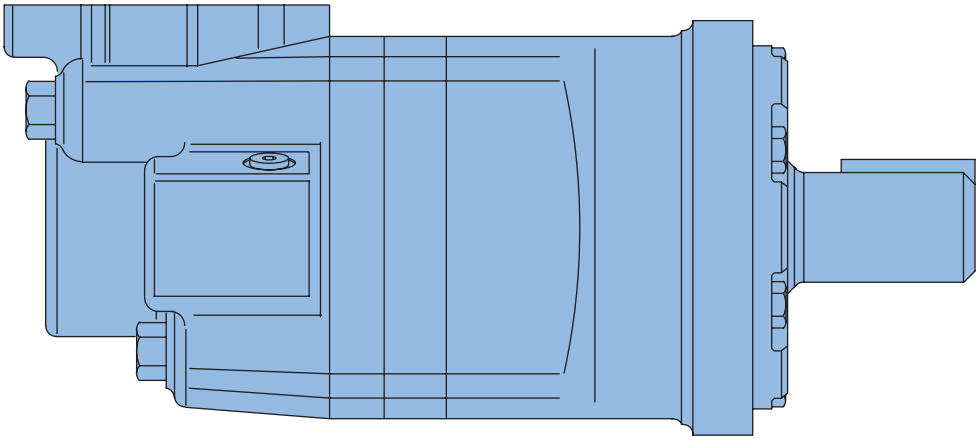

6000 SERIES MOTORS

Displ. cm^3/r [in^3/r]		195 [11.9]	245 [15.0]	310 [19.0]	390 [23.9]	490 [30.0]	625 [38.0]	735 [45.0]	805 [49.0]	985 [60.0]
Max. Speed (RPM) @ Flow	Continuous	775	615	485	387	307	241	203	187	153
	Intermittent	866	834	698	570	454	355	303	280	230
Flow l/min [GPM]	Continuous	150 [40]	150 [40]	150 [40]	150 [40]	150 [40]	150 [40]	150 [40]	150 [40]	150 [40]
	Intermittent	170 [45]	210 [55]	225 [60]	225 [60]	225[60]	225 [60]	225[60]	225[60]	225 [60]
Torque* Nm [lb-in]	Continuous	575 [5100]	735 [6510]	930 [8230]	1155 [10230]	1445 [12800]	1480 [13100]	1378 [12192]	1582 [14004]	1685 [14920]
	Intermittent	860 [7620]	1100 [9740]	1355 [11990]	1635 [14490]	1885 [16670]	1898 [16800]	1699 [15040]	1850 [16377]	1875 [16580]
Pressure Δ bar [Δ PSI]	Continuous	205 [3000]	205 [3000]	205 [3000]	205 [3000]	205 [3000]	170 [2500]	140 [2000]	140 [2000]	140 [2000]
	Intermittent	310 [4500]	310 [4500]	310 [4500]	310 [4500]	275 [4000]	221 [3200]	170 [2500]	170 [2500	140 [2000]
	Peak	310 [4500]	310 [4500]	310 [4500]	310 [4500]	310 [4500]	240 [3500]	205 [3000]	170 [2500	170 [2250]
Weight kg [lb]	Standard or Wheel Mount	24,9 [55.0]	25,2 [55.5]	25,6 [56.5]	26,3 [58.0]	27.0 [59.5]	27,9 [61.5]	28.6 [63.0]	29 [64.0]	30,4 [67.0]
	Bearingless	20.2 [44.5]	20.4 [45.0]	20.9 [46.0]	21.5 [47.5]	22.2 [49.0]	23.1 [51.0]	28.3 [52.5]	28.8 [53.5]	30.2 [56.5]

Maximum Case Pressure: See case pressure seal limitation graph.

*See shaft torque ratings for limitations..

Note:

To assure best motor life, run motor for approximately one hour at 30% of rated pressure before application to full load. Be sure motor is filled with fluid prior to any load applications.

Maximum Inlet Pressure:

310 bar [4500 PSI]

Do not exceed Δ pressure rating (see chart above).

Maximum Return Pressure:

310 bar [4500 PSI] with case drain line installed.

Do not exceed Δ pressure rating (see chart above).

Δ bar [Δ PSI] :

The true pressure difference between inlet port and outlet port

Continuous Rating:

Motor may be run continuously at these ratings

Intermittent Operation:

10% of every minute

Peak Operation:

1% of every minute

Recommended Fluids:

Premium quality, anti-wear type hydraulic oil with a viscosity of not less than 70 SUS at operating temperature.

Recommended System Operating Temp.:

-34°C to 82°C [-30°F to 180°F]

Recommended Filtration:

per ISO Cleanliness Code, 4406: 20/18/13

6000 Series

Performance Data

Motors run with high efficiency in all areas designated with a number for torque and speed. For best motor life select a motor to run with a torque and speed range shown in the light shaded area.

Performance data is typical at 120 SUS. Actual data may vary slightly from unit to unit in production.

Continuous

Peak

Intermittent

No Operation

195cm³/r [11.9 in³/r]
ΔPressure Bar [PSI]

Flow LPM [GPM]

	[250] 15	[500] 35	[1000] 70	[1500] 105	[2000] 140	[2500] 170	[3000] 205	[3500] 240	[4000] 275	[4500] 310
[.5] 1,9	[280] 30 9	[650] 75 7	[1450] 165 5	[2290] 260 2						
[2] 7,5	[290] 35 38	[680] 75 37	[1500] 170 35	[2340] 265 34	[3100] 350 30	[3880] 440 26	[4140] 470 18			
[4] 15	[300] 35 77	[710] 80 76	[1500] 175 74	[2390] 270 72	[3200] 365 66	[4030] 455 62	[4600] 520 46	[5200] 590 32	[5790] 655 18	
[8] 30	[310] 35 154	[740] 85 153	[1590] 180 148	[2450] 275 144	[3280] 370 131	[4120] 465 119	[4810] 545 116	[5530] 625 99	[6250] 705 83	[6900] 780 65
[12] 45	[320] 35 232	[750] 85 230	[1610] 180 225	[2480] 280 221	[3330] 375 212	[4190] 475 203	[4990] 565 186	[5810] 655 167	[6630] 750 148	[7320] 825 118
[16] 61	[300] 35 309	[730] 80 307	[1600] 180 303	[2470] 280 300	[3340] 375 291	[4210] 475 283	[5090] 575 258	[5900] 665 236	[6710] 760 214	[7470] 845 181
[20] 76	[270] 30 387	[720] 80 384	[1590] 180 379	[2460] 280 374	[3350] 380 365	[4240] 480 356	[5100] 575 332	[5950] 670 306	[6800] 770 280	[7620] 860 247
[24] 91	[240] 25 465	[700] 80 462	[1570] 175 456	[2440] 275 450	[3330] 375 440	[4220] 475 429	[5080] 575 413	[5940] 670 388	[6810] 770 363	
[28] 106	[190] 20 542	[660] 75 539	[1530] 175 532	[2400] 270 526	[3300] 375 514	[4200] 475 502	[5060] 570 476	[5940] 670 448	[6810] 770 421	
[32] 121	[160] 20 620	[630] 70 617	[1500] 170 609	[2370] 270 602	[3270] 370 589	[4160] 470 576	[5040] 570 542	[5920] 670 511	[6790] 765 480	
[36] 136	[120] 15 697	[620] 70 692	[1480] 165 683	[2350] 265 674	[3240] 365 659	[4130] 465 645	[5000] 565 601	[5880] 665 564	[6760] 765 527	
[40] 151	[80] 10 775	[610] 70 770	[1450] 165 759	[2320] 260 749	[3210] 365 733	[4100] 465 718	[4960] 560 666	[5840] 660 624		
[45] *70		[590] 65 866	[1410] 160 854	[2280] 260 843	[3170] 360 825	[4060] 460 808	[4920] 555 749	[5790] 655 702		

[5790] 655 702 } Torque [lb-in] Nm Speed RPM

245cm³/r [15.0 in³/r]
ΔPressure Bar [PSI]

Flow LPM [GPM]

	[250] 15	[500] 35	[1000] 70	[1000] 105	[2000] 140	[2500] 170	[3000] 205	[3500] 240	[4000] 275	[4500] 310
[.5] 1,9	[430] 50 7	[860] 95 4	[1890] 215 1							
[2] 7,5	[440] 50 30	[900] 100 29	[1940] 220 26	[2990] 340 24	[3960] 445 21	[4920] 555 17	[5040] 570 11	[5930] 670 6		
[4] 15	[460] 50 61	[940] 105 60	[2000] 225 56	[3060] 345 54	[4080] 460 48	[5090] 575 42	[5680] 640 39	[6630] 750 30	[7570] 855 12	[8520] 965 6
[8] 30	[470] 55 122	[960] 110 120	[2060] 235 116	[3150] 355 113	[4210] 475 104	[5260] 595 95	[6180] 700 81	[7100] 800 67	[8020] 905 53	[9020] 1020 37
[12] 45	[480] 55 183	[970] 110 182	[2080] 235 178	[3180] 360 174	[4270] 480 165	[5360] 605 157	[6390] 720 141	[7420] 840 125	[8450] 955 109	[9510] 1075 92
[16] 61	[450] 50 245	[960] 110 244	[2070] 235 240	[3180] 360 236	[4290] 485 228	[5420] 610 221	[6480] 730 202	[7490] 845 184	[8480] 960 165	[9540] 1180 145
[20] 76	[420] 45 307	[940] 105 306	[2050] 230 301	[3160] 355 297	[4290] 485 287	[5440] 615 277	[6510] 735 257	[7580] 855 238	[8660] 980 218	[9740] 1100 197
[24] 91	[380] 45 368	[920] 105 365	[2020] 230 361	[3120] 355 358	[4260] 480 348	[5400] 610 338	[6490] 735 316	[7590] 860 294	[8680] 980 271	
[28] 106	[330] 35 430	[870] 100 426	[1980] 225 421	[3100] 350 416	[4240] 480 404	[5380] 610 376	[6480] 730 358	[7580] 855 340	[8670] 980 322	
[32] 121	[290] 35 491	[800] 90 489	[1920] 215 481	[3050] 345 475	[4170] 470 461	[5290] 600 448	[6410] 725 423	[7520] 850 398	[8640] 975 373	
[36] 136	[250] 30 556	[730] 80 549	[1850] 210 543	[2980] 335 537	[4060] 460 524	[5150] 580 509	[6300] 710 482	[7440] 840 456		
[40] 151	[200] 25 615	[690] 80 612	[1790] 200 606	[2940] 330 599	[4010] 455 585	[5130] 580 570	[6190] 700 540	[7100] 800 510		
[45] 170		[570] 65 688	[1760] 200 682	[2860] 325 674	[3960] 445 658	[5070] 575 641	[6080] 685 608	[6690] 755 574		
[50] 189			[1720] 195 758	[2800] 315 749	[3890] 440 731	[4920] 555 712	[5940] 670 676			
[55] 208			[1670] 190 834	[2740] 310 824	[3820] 430 804	[4890] 550 783	[5880] 665 744			

C-5

6000 Series

Performance Data

Motors run with high efficiency in all areas designated with a number for torque and speed. For best motor life select a motor to run with a torque and speed range shown in the light shaded area.

Performance data is typical at 120 SUS. Actual data may vary slightly from unit to unit in production.

Continuous

Peak

Intermittent

No Operation

310cm³/r [19.0 in³/r]
ΔPressure Bar [PSI]

Flow LPM [GPM]	[250] 15	[500] 35	[1000] 70	[1500] 105	[2000] 140	[2500] 170	[3000] 205	[3500] 240	[4000] 275	[4500] 310
[.5] 1,9	[530] 60 6	[1120] 125 4	[2440] 275 1							
[2] 7,5	[540] 60 24	[1150] 130 23	[2460] 280 22	[3620] 410 20	[4780] 540 17	[5690] 645 14	[6670] 755 10	[7780] 880 4		
[4] 15	[550] 60 48	[1180] 135 47	[2560] 290 45	[3800] 430 42	[5030] 570 38	[6050] 685 32	[7070] 800 24	[8260] 935 17	[9070] 1025 10	[9530] 1075 3
[8] 30	[560] 65 96	[1250] 140 95	[2650] 300 91	[3970] 450 87	[5280] 595 81	[6480] 730 73	[7710] 870 64	[8740] 985 55	[9770] 1105 46	[10990] 1240 35
[12] 45	[570] 65 144	[1260] 140 143	[2690] 305 140	[4050] 460 135	[5420] 610 129	[6730] 760 121	[8040] 910 111	[9260] 1045 99	[10490] 1185 88	[11800] 1335 76
[16] 61	[540] 60 193	[1230] 140 192	[2660] 300 188	[4060] 460 184	[5450] 615 178	[6800] 770 167	[8150] 920 156	[9400] 1060 141	[10660] 1205 126	[11990] 1355 109
[20] 76	[510] 60 242	[1200] 135 241	[2630] 295 236	[4040] 455 232	[5450] 615 226	[6820] 770 216	[8190] 925 201	[9520] 1075 184	[10840] 1225 167	
[24] 91	[480] 55 290	[1160] 130 289	[260] 295 282	[4020] 455 279	[5440] 615 273	[6840] 775 260	[8230] 930 248	[9560] 1080 232	[10900] 1230 215	
[28] 106	[420] 45 339	[1130] 130 336	[2570] 290 333	[3990] 450 328	[5420] 610 320	[6820] 770 308	[8220] 930 295	[9520] 1075 276	[10840] 1225 257	
[32] 121	[360] 40 388	[1100] 125 384	[2510] 285 381	[3920] 445 375	[5330] 600 368	[6750] 765 354	[8170] 920 341	[9440] 1065 320		
[36] 136	[300] 35 436	[1060] 120 430	[2440] 275 421	[3830] 435 416	[5220] 590 410	[6660] 750 396	[8100] 915 383	[9330] 1055 360		
[40] 151	[270] 30 485	[1020] 115 478	[2400] 270 466	[3780] 425 461	[5150] 580 456	[6580] 745 441	[8020] 905 427	[9220] 1040 403		
[50] 189		[982] 110 597	[2180] 245 582	[3420] 385 576	[4660] 525 570	[6050] 685 551	[7440] 840 534			
[60] 227			[1960] 220 698	[3250] 365 691	[4540] 515 684	[5750] 650 661	[7080] 800 641			

[5750] 650 661 } Torque [lb-in] Nm Speed RPM

390cm³/r [23.9 in³/r]
ΔPressure Bar [PSI]

Flow LPM [GPM]	[250] 15	[500] 35	[1000] 70	[1500] 105	[2000] 140	[2500] 170	[3000] 205	[3500] 240	[4000] 275	[4500] 310
[1] 3,8	[760] 85 4	[1570] 175 2	[3230] 365 1							
[2] 7,5	[780] 90 19	[1610] 180 18	[3270] 370 17	[4910] 555 16	[6440] 730 14	[7760] 875 12	[9080] 1025 9	[10590] 1195 4		
[4] 15	[800] 90 38	[1640] 185 38	[3300] 375 37	[4970] 560 35	[6570] 740 33	[8160] 920 29	[9570] 1080 22	[11270] 1275 14	[12120] 1370 5	[14490] 1635 1
[8] 30	[810] 90 77	[1650] 185 76	[3370] 380 74	[5080] 575 72	[6740] 760 68	[8430] 950 65	[10050] 1135 55	[11620] 1315 45	[12880] 1455 33	[14480] 1635 21
[12] 45	[800] 90 115	[1620] 185 115	[3390] 385 112	[5130] 580 109	[6810] 770 105	[8520] 965 100	[10190] 1150 91	[11860] 1340 81	[13640] 1540 79	
[16] 61	[750] 85 154	[1600] 180 154	[3380] 380 151	[5120] 580 147	[6820] 770 143	[8560] 965 132	[10230] 1155 126	[11920] 1345 116		
[20] 76	[680] 75 193	[1580] 180 193	[3360] 380 189	[5120] 580 187	[6840] 775 182	[8590] 970 175	[10280] 1160 162	[11980] 1355 152		
[24] 91	[620] 70 232	[1520] 170 230	[3280] 370 229	[5060] 570 225	[6780] 765 220	[8530] 965 212	[10240] 1155 204			
[28] 106	[570] 65 270	[1460] 165 268	[3210] 365 266	[5000] 565 261	[6730] 760 256	[8480] 960 248	[10200] 1150 236			
[32] 121	[530] 60 309	[1420] 160 306	[3140] 355 304	[4930] 555 299	[6640] 750 292	[8380] 945 282	[10120] 1145 269			
[36] 136	[450] 50 348	[1370] 155 346	[3010] 340 340	[4840] 545 336	[6500] 730 329	[8250] 930 317	[10000] 1130 301			
[40] 151	[380] 45 387	[1320] 150 386	[2880] 325 380	[4740] 535 375	[6460] 730 368	[8120] 915 359				
[50] 189		[1140] 130 482	[2650] 300 475	[4540] 515 469	[6440] 730 460	[8050] 910 449				
[60] 227			[2460] 280 570	[4430] 500 562	[6360] 720 552	[7860] 890 538				

6000 Series

Performance Data

Motors run with high efficiency in all areas designated with a number for torque and speed. For best motor life select a motor to run with a torque and speed range shown in the light shaded area.

Performance data is typical at 120 SUS. Actual data may vary slightly from unit to unit in production.

Continuous

Peak

Intermittent

No Operation

490cm³/r [30.0 in³/r]
ΔPressure Bar [PSI]

Flow LPM [GPM]

	[250] 15	[500] 35	[1000] 70	[1500] 105	[2000] 140	[2500] 170	[3000] 205	[3500] 240	[4000] 275
[1] 3,8	[1010] 115 7	[1200] 235 7	[4260] 480 5	[6140] 695 3					
[2] 7,5	[1020] 115 15	[2110] 240 14	[4270] 480 13	[6280] 710 12	[8350] 945 11	[10420] 1175 8	[12140] 1370 3		
[4] 15	[1030] 115 30	[2100] 235 30	[4280] 485 29	[6410] 725 28	[8500] 960 27	[10590] 1195 25	[12500] 1410 21	[14580] 1645 17	[16670] 1885 12
[8] 30	[1020] 115 60	[2090] 235 60	[4290] 485 59	[6490] 735 57	[8620] 975 54	[10740] 1215 51	[12800] 1445 45	[14930] 1685 38	
[12] 45	[1000] 115 91	[2080] 235 91	[4290] 485 89	[6500] 735 87	[8650] 975 84	[10800] 1220 79	[12890] 1455 71		
[16] 61	[110] 960 122	[2060] 235 122	[4260] 480 121	[6480] 730 118	[8650] 975 114	[10820] 1220 109	[12900] 1460 100		
[20] 76	[900] 100 153	[1980] 225 152	[4180] 470 150	[6420] 725 147	[8620] 975 144	[10820] 1220 139			
[24] 91	[850] 95 184	[1930] 220 184	[4150] 470 181	[6390] 720 180	[8580] 970 176	[10770] 1215 171			
[28] 106	[740] 85 215	[1840] 210 214	[4070] 460 211	[6290] 710 208	[8500] 960 204	[10720] 1210 198			
[32] 121	[690] 80 245	[1710] 195 244	[3970] 450 241	[6190] 700 237	[8420] 950 232	[10660] 1205 226			
[36] 136	[670] 75 276	[1560] 175 275	[3860] 435 272	[6080] 685 265	[8340] 940 260	[10420] 1175 255			
[40] 151	[570] 65 307	[1400] 160 306	[3750] 425 303	[5970] 675 295	[8140] 920 290	[10180] 1150 284			
[50] 189		[1140] 130 382	[3240] 365 379	[5220] 590 369	[7620] 860 362				
[60] 227			[2860] 325 454	[4860] 550 442	[7140] 805 435				

[2860] 325 454 } Torque [lb-in] Nm Speed RPM

625cm³/r [38.0 in³/r]
ΔPressure Bar [PSI]

Flow LPM [GPM]

	[250] 15	[500] 35	[1000] 70	[1500] 105	[2000] 140	[2500] 170	[3000] 205	[3200] 221
[1] 3,8	[1060] 120 5	[2205] 250 5	[4515] 510 4	[6690] 755 2				
[2] 7,5	[1090] 125 12	[2300] 260 12	[4720] 535 13	[7025] 795 10	[9360] 1060 6			
[4] 15	[1145] 130 24	[2450] 275 24	[5052] 570 24	[7520] 850 21	[9410] 1065 16	[12700] 1434 13		
[8] 30	[1195] 135 45	[2600] 295 45	[5350] 605 44	[8195] 925 42	[11220] 1270 37	[13100] 1480 35	[15800] 1785 32	[16800] 1898 30
[12] 45	[1200] 135 72	[2600] 295 72	[5390] 610 71	[8145] 920 68	[11770] 1330 64	[13000] 1469 60	[15700] 1774 56	
[16] 61	[1120] 125 94	[2530] 285 94	[5340] 605 92	[8105] 915 89	[11740] 1325 85	[13000] 1469 83		
[20] 76	[1050] 120 120	[2465] 280 119	[5285] 595 117	[8080] 915 115	[11725] 1325 110			
[24] 91	[950] 105 144	[2365] 265 143	[5180] 585 140	[7990] 905 138	[11705] 1320 132			
[28] 106	[855] 95 169	[2255] 255 168	[5080] 575 165	[7915] 895 162	[11640] 1315 156			
[32] 121	[730] 80 193	[2140] 240 192	[4960] 560 188	[7775] 880 185	[11505] 1300 179			
[36] 136	[555] 65 217	[1965] 220 216	[4780] 540 213	[7585] 855 210				
[40] 151	[380] 45 241	[1790] 200 240	[4600] 520 238	[7395] 835 236				
[50] 189			[4180] 470 296	[6985] 790 290				
[60] 227			[3800] 430 353	[6600] 745 345				

C-5

6000 Series

Performance Data

Motors run with high efficiency in all areas designated with a number for torque and speed. For best motor life select a motor to run with a torque and speed range shown in the light shaded area.

Performance data is typical at 120 SUS. Actual data may vary slightly from unit to unit in production.

Continuous

Peak

Intermittent

No Operation

735cm³/r [45.0 in³/r]
ΔPressure Bar [PSI]

Flow LPM [GPM]

	[250] 15	[500] 35	[750] 50	[1000] 70	[1250] 85	[1500] 105	[1750] 120	[2000] 140	[2250] 155	[2500] 170
[1] 3,8	[1311] 148 4	[2775] 314 4	[4200] 475 3	[5480] 619 3	[7000] 791 2					
[2] 7,5	[1340] 151 10	[2856] 323 10	[4535] 512 10	[5809] 656 10	[7551] 853 9	[8685] 981 7	[10182] 1150 6	[11121] 1257 5		
[4] 15	[1253] 142 20	[2854] 322 20	[4363] 493 19	[5813] 657 18	[7272] 822 17	[8714] 985 16	[10135] 1145 14	[11537] 1303 13	[12970] 1465 11	[15040] 1699 11
[8] 30	[1290] 146 40	[2889] 326 39	[4540] 513 38	[6130] 693 38	[7703] 870 37	[9202] 1040 37	[10666] 1205 35	[12192] 1378 33	[13713] 1549 32	
[12] 45	[1277] 144 61	[2821] 319 60	[4528] 512 59	[6180] 698 58	[7795] 881 57	[9338] 1055 56	[10877] 1229 54	[12419] 1403 52		
[16] 61	[1196] 135 82	[2753] 311 80	[4478] 506 79	[6148] 695 78	[7768] 878 77	[9376] 1059 76	[10984] 1241 74			
[20] 76	[1092] 123 102	[2794] 316 101	[4320] 488 101	[6021] 680 99	[7697] 870 97	[9311] 1052 96	[10907] 1232 93			
[24] 91	[1206] 136 123	[2556] 289 122	[4162] 470 120	[5871] 663 119	[7564] 855 118	[9289] 1049 116				
[28] 106	[1083] 122 145	[2338] 264 142	[4040] 456 141	[5666] 640 139	[7365] 832 137	[9022] 1019 135				
[32] 121	[950] 107 163	[2110] 238 162	[3795] 429 162	[5457] 617 159	[7122] 805 159	[8828] 997 156				
[36] 136	[726] 82 184	[1845] 208 183	[3517] 397 182	[5223] 590 181	[6853] 774 179					
[40] 151	[515] 58 203	[2227] 252 202	[3270] 369 202	[4965] 561 201	[6672] 754 199					
[50] 189			[3869] 437 254	[4148] 469 252	[5850] 661 250					
[60] 227				[4856] 549 303	[6604] 746 301					

[6604] 746 301 } Torque [lb-in] Nm Speed RPM

805cm³/r [49.0 in³/r]
ΔPressure Bar [PSI]

Flow LPM [GPM]

	[250] 15	[500] 35	[750] 50	[1000] 70	[1250] 85	[1500] 105	[1750] 120	[2000] 140	[2250] 155	[2500] 170
[1] 3,8	[1455] 164 4	[3100] 350 4	[4680] 529 2	[6031] 681 2	[7799] 881 1					
[2] 7,5	[1483] 168 9	[3173] 359 9	[5121] 579 9	[6432] 727 8	[8510] 961 7	[9633] 1088 6	[11319] 1279 5	[12127] 1370 5		
[4] 15	[1547] 175 19	[3331] 376 19	[5292] 598 18	[6744] 762 17	[8714] 984 16	[10075] 1138 15	[11352] 1283 14	[12539] 1417 12	[14564] 1645 11	[16377] 1850 10
[8] 30	[1599] 181 35	[3473] 392 35	[5415] 612 34	[7039] 795 33	[8934] 1009 32	[10629] 1201 31	[11842] 1338 29	[14004] 1582 29	[15441] 1745 28	
[12] 45	[1599] 181 56	[3469] 392 56	[5415] 612 55	[7093] 801 53	[9024] 1020 53	[10658] 1204 52	[12283] 1388 50	[13726] 1551 50		
[16] 61	[1543] 174 73	[3395] 384 73	[5357] 605 72	[7032] 794 70	[8983] 1015 69	[10640] 1202 68	[12010] 1357 67			
[20] 76	[1457] 165 93	[3312] 374 92	[5292] 598 91	[6968] 787 89	[8943] 1010 88	[10583] 1196 87	[12146] 1372 86			
[24] 91	[1352] 153 112	[3183] 360 112	[5088] 575 111	[6811] 769 110	[8812] 996 108	[10411] 1176 106				
[28] 106	[1213] 137 131	[3055] 345 131	[5047] 570 131	[6713] 758 129	[8681] 981 128	[10411] 1176 127				
[32] 121	[1075] 121 150	[2907] 328 149	[4884] 552 149	[6546] 740 146	[8395] 949 145	[10060] 1137 144				
[36] 136	[823] 93 168	[2692] 304 168	[4663] 527 168	[6320] 714 167	[8118] 917 165					
[40] 151	[592] 67 187	[2477] 280 186	[4426] 500 186	[6085] 688 185	[7832] 885 184					
[50] 189		[2730] 308 234	[4214] 476 233	[5849] 661 231	[7603] 859 230					
[60] 227			[3806] 430 280	[5459] 617 277	[7407] 837 275					

6000 Series

Performance Data

Motors run with high efficiency in all areas designated with a number for torque and speed. For best motor life select a motor to run with a torque and speed range shown in the light shaded area.

Performance data is typical at 120 SUS. Actual data may vary slightly from unit to unit in production.

Continuous

Peak

Intermittent

No Operation

985cm³/r [60.0 in³/r]
ΔPressure Bar [PSI]

Flow LPM [GPM]	[250] 15	[500] 35	[750] 50	[1000] 70	[1250] 85	[1500] 105	[1750] 120	[2000] 140
[1] 3,8	[1890] 215 3	[4110] 465 3	[5730] 645 2	[7640] 865 2	[9550] 1080 1			
[2] 7,5	[1910] 215 8	[4 140] 470 8	[6270] 710 7	[8300] 940 7	[10420] 1175 6	[12500] 1410 5	[13860] 1565 4	[14920] 1685 3
[4] 15	[1980] 225 15	[4290] 485 15	[6480] 775 15	[8540] 965 14	[10670] 1205 14	[12800] 1445 13	[13900] 1570 13	[15850] 1790 12
[8] 30	[2030] 230 30	[4400] 495 30	[6630] 750 30	[8790] 995 29	[10940] 1235 28	[13090] 1480 27	[14500] 1640 26	[16580] 1875 25
[12] 45	[2020] 230 45	[4390] 495 45	[6630] 750 45	[8860] 1000 44	[11050] 1250 43	[13240] 1495 42	[15040] 1700 41	
[16] 61	[2010] 225 61	[4320] 490 61	[6560] 740 61	[8790] 995 60	[11000] 1245 59	[13260] 1500 58		
[20] 76	[1910] 215 77	[4220] 475 77	[6480] 730 76	[8720] 985 76	[10950] 1235 75	[13160] 1485 74		
[24] 91	[1810] 205 92	[4060] 460 92	[6230] 705 92	[8500] 960 91	[10790] 1220 90	[12990] 1470 89		
[28] 106	[1620] 185 107	[3920] 445 107	[6180] 700 107	[8420] 950 106	[10630] 1200 105	[12820] 1450 103		
[32] 121	[1480] 165 123	[3740] 425 123	[5980] 675 122	[8200] 925 121	[10280] 1160 120			
[36] 136	[1140] 130 138	[3490] 395 138	[5710] 645 138	[7930] 895 137	[9940] 1125 135			
[40] 151	[850] 95 153	[3240] 365 153	[5420] 610 152	[7640] 865 151	[9590] 1085 150			
[50] 189		[2960] 325 191	[5160] 585 190	[7350] 830 189	[9310] 1050 188			
[60] 227			[4660] 525 230	[7160] 810 229	[9070] 1025 226			

[7160] 810 229 } Torque [lb-in] Nm Speed RPM

C-5

6000 Series

Dimensions

Standard Mount

Ports

1 5/16 -12 UN-2B SAE O-ring Staggered Ports (2)
7/16 -20 UNF-2B SAE O-ring Case Drain Port (1) or

4 Bolt 3/4 inch Split Flange Ports (2)
7/16 -20 UNF-2B SAE O-ring Case Drain Port (1) or

G 1 (BSP) Staggered Ports (2)
G 1/4 (BSP) Case Drain Port (1) or

1 5/16 UN-2B SAE O-ring Staggered Ports (2) with Shuttle
9/16 -20 UNF-2B SAE O-ring Case Drain Port (1)

Standard Rotation Viewed from Shaft End

Port A Pressurized — CW
Port B Pressurized — CCW

Standard Mount

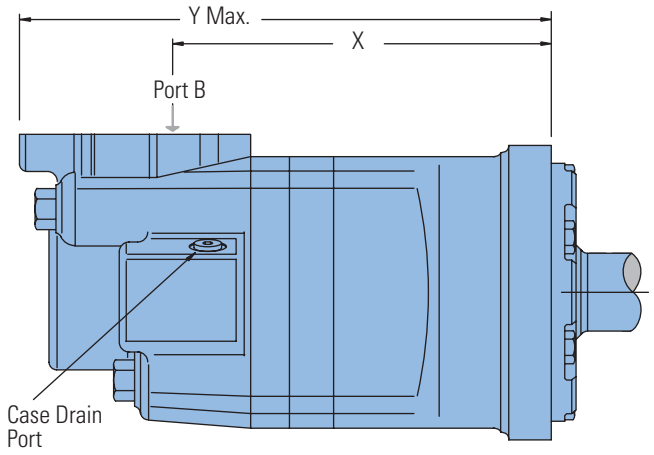

Standard SAE CC Flange

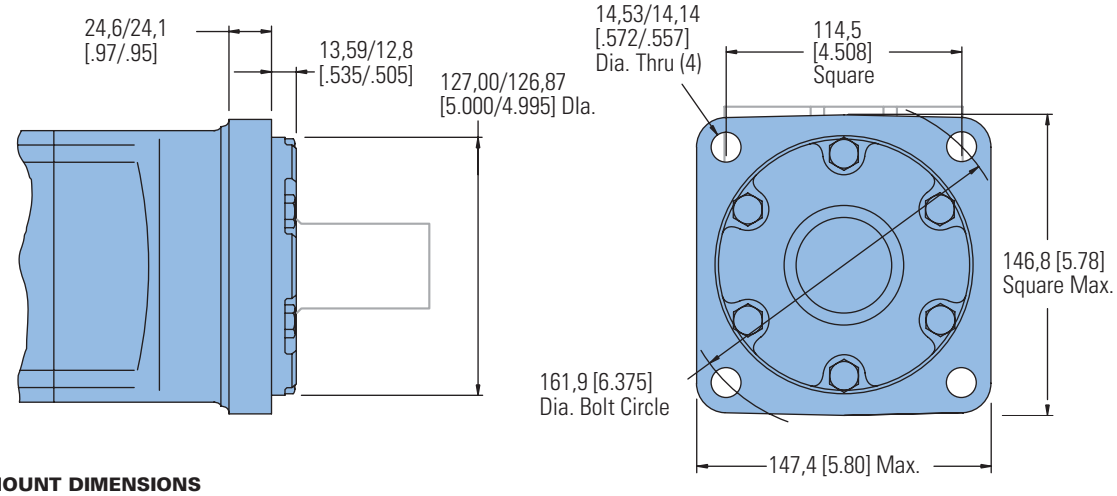

STANDARD MOTOR MOUNT DIMENSIONS

Displacement cm³/r [in³/r]	X mm [inch]	Y mm [inch]
195 [11.9]	187,5 [7.38]	270,0 [10.63]
245 [15.0]	193,0 [7.60]	275,6 [10.85]
310 [19.0]	200,4 [7.89]	283,0 [11.14]
390 [23.9]	209,0 [8.23]	291,6 [11.48]
490 [30.0]	220,2 [8.67]	302,8 [11.92]
625 [38.0]	235,0 [9.25]	317,5 [12.50]
985 [60.0]	274,6 [10.81]	357,1 [14.06]

6000 Series

Dimensions

Wheel Mount

Ports

1 5/16 -12 UN-2B SAE O-ring Staggered Ports (2)
7/16 -20 UNF-2B SAE O-ring Case Drain Port (1) or

4 Bolt 3/4 inch Split Flange Ports (2)
7/16 -20 UNF-2B SAE O-ring Case Drain Port (1) or

G 1 (BSP) Staggered Ports (2)
G 1/4 (BSP) Case Drain Port (1) or

1 5/16 UN-2B SAE O-ring Staggered Ports (2) with Shuttle
9/16 -20 UNF-2B SAE O-ring Case Drain Port (1)

Standard Rotation Viewed from Shaft End

Port A Pressurized — CW
Port B Pressurized — CCW

Wheel Mount

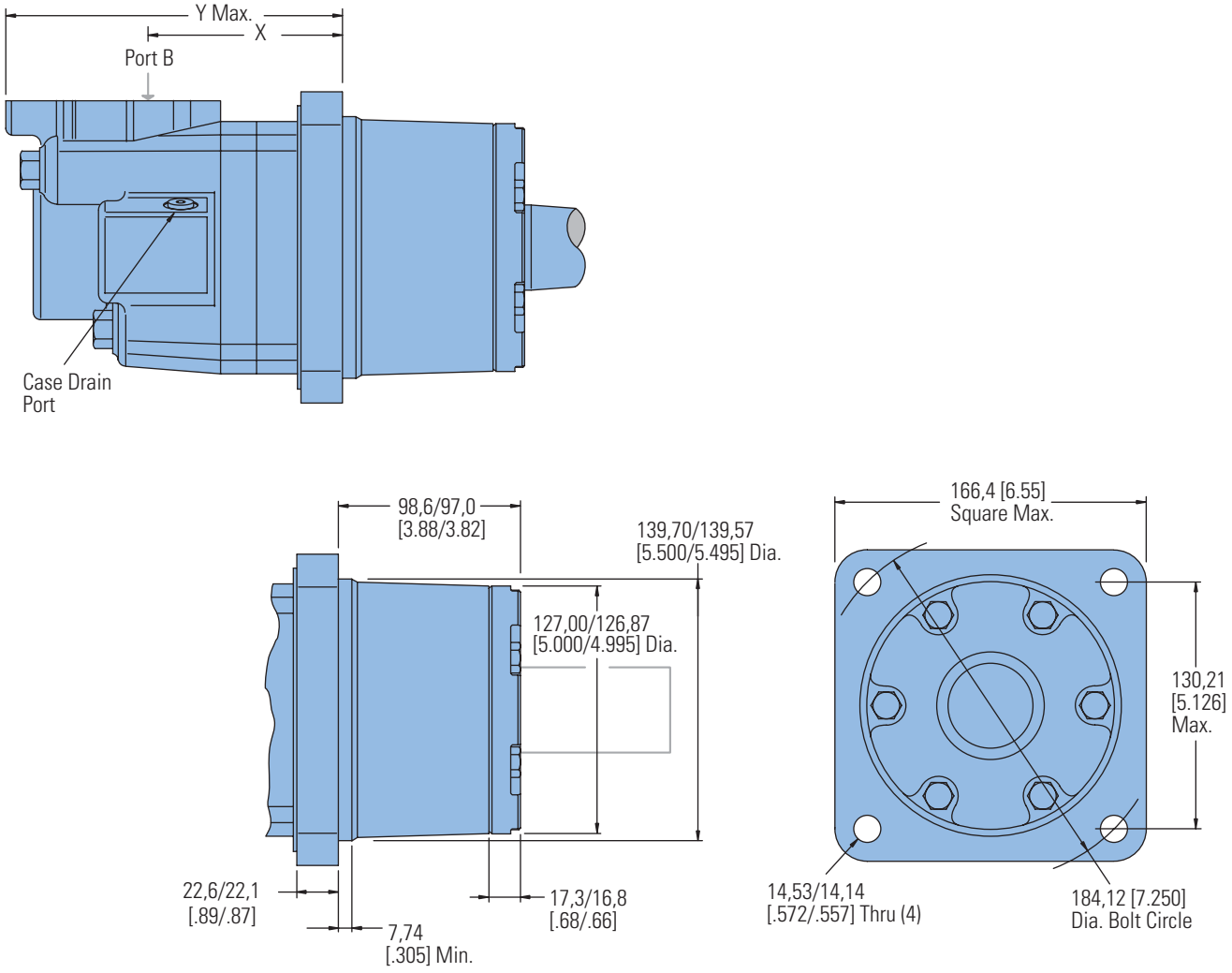

WHEEL MOUNT MOTOR DIMENSIONS

Displacement cm^3/r [in^3/r]	X mm [inch]	Y mm [inch]
195 [11.9]	102,6 [4.04]	185,2 [7.29]
245 [15.0]	108,2 [4.26]	190,8 [7.51]
310 [19.0]	115,6 [4.55]	198,1 [7.80]
390 [23.9]	124,5 [4.90]	207,1 [8.15]
490 [30.0]	135,4 [5.33]	217,9 [8.58]
625 [38.0]	150,1 [5.91]	232,7 [9.16]
985 [60.0]	189,7 [7.47]	272,5 [10.73]

6000 Series

Dimensions

Global Mount (ISO)

Ports

1 5/16 -12 UN-2B SAE O-ring Staggered Ports (2)
7/16 -20 UNF-2B SAE O-ring Case Drain Port (1) or

4 Bolt 3/4 inch Split Flange Ports (2)
7/16 -20 UNF-2B SAE O-ring Case Drain Port (1) or

G 1 (BSP) Staggered Ports (2)
G 1/4 (BSP) Case Drain Port (1) or

1 5/16 UN-2B SAE O-ring Staggered Ports (2) with Shuttle
9/16 -20 UNF-2B SAE O-ring Case Drain Port (1)

Standard Rotation Viewed from Shaft End

Port A Pressurized — CW
Port B Pressurized — CCW

Global Mount (ISO)

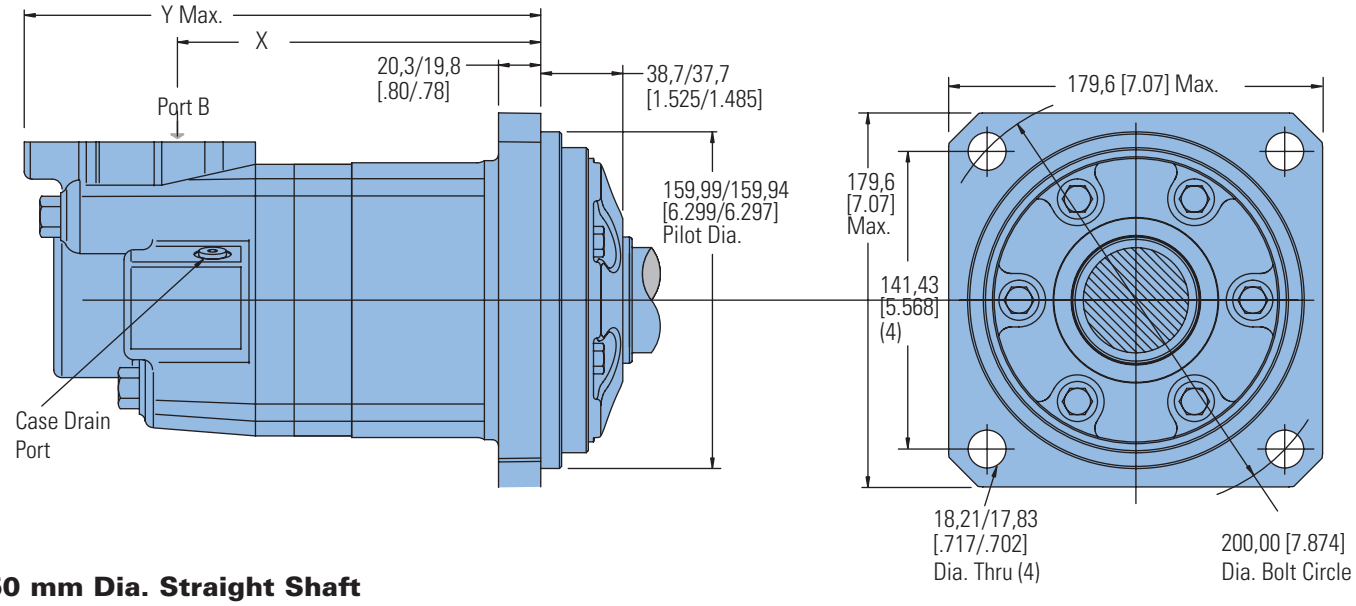

50 mm Dia. Straight Shaft

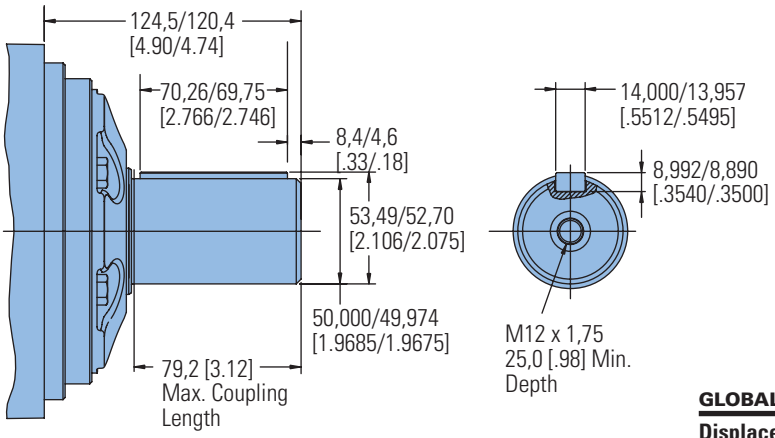

GLOBAL MOUNT MOTOR DIMENSIONS

Displacement cm³/r [in³/r]	X mm [inch]	Y mm [inch]
310 [19.0]	182,4 [7.18]	264,9 [10.43]
390 [24.0]	191,0 [7.52]	273,6 [10.77]
490 [30.0]	202,2 [7.96]	284,7 [11.21]
625 [38.0]	216,9 [8.54]	299,5 [11.79]
800 [45.0]	229,4 [9.03]	312,2 [12.29]
800 [49.0]	236,7 [9.32]	319,3 [12.57]
985 [60.0]	256,5 [10.10]	339,1 [13.35]

6000 Series

Dimensions

Bearlingless

Ports

1 5/16 -12 UN-2B SAE O-ring Staggered Ports (2)
7/16 -20 UNF-2B SAE O-ring Case Drain Port (1) or

4 Bolt 3/4 inch Split Flange Ports (2)
7/16 -20 UNF-2B SAE O-ring Case Drain Port (1) or

G 1 (BSP) Staggered Ports (2)
G 1/4 (BSP) Case Drain Port (1) or

1 5/16 UN-2B SAE O-ring Staggered Ports (2) with Shuttle
9/16 -20 UNF-2B SAE O-ring Case Drain Port (1)

Standard Rotation Viewed from Shaft End

Port A Pressurized — CW
Port B Pressurized — CCW

Bearingless

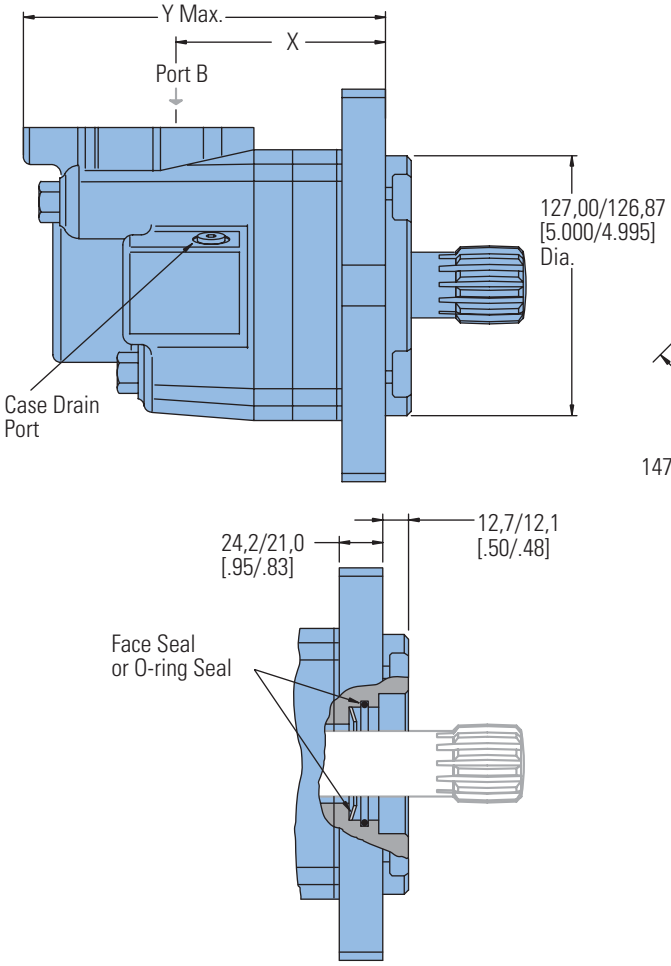

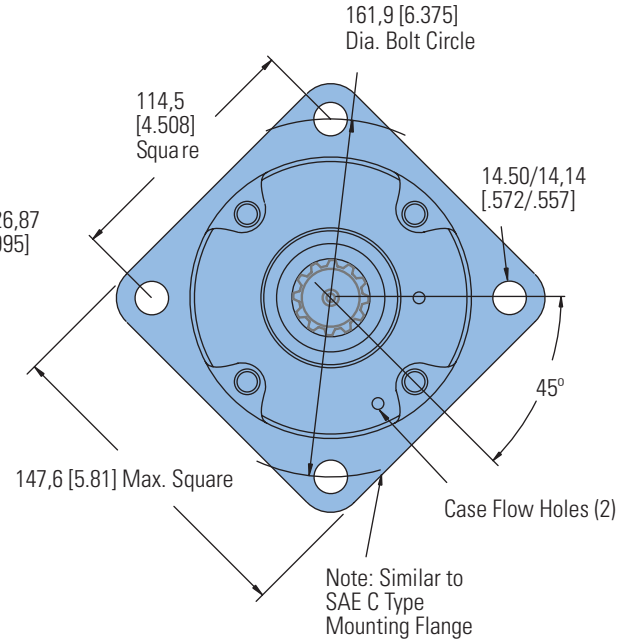

BEARINGLESS MOTOR DIMENSIONS

Displacement cm³/r [in³/r]	X mm [inch]	Y mm [inch]
195 [11.9]	105,4 [4.15]	188,0 [7.40]
245 [15.0]	111,0 [4.37]	193,5 [7.62]
310 [19.0]	118,4 [4.66]	200,9 [7.91]
390 [23.9]	127,3 [5.01]	209,6 [8.25]
490 [30.0]	138,2 [5.44]	220,7 [8.69]
625 [38.0]	152,9 [6.02]	235,5 [9.27]
985 [60.0]	192,8 [7.59]	275,1 [10.83]

For 6000 bearingless motor application information, contact your Eaton representative (mating coupling blanks available from Eaton Hydraulics).

Note:

After machining blank, part must be hardened per Eaton specification.

- C 47,2 [1.86] Dia.
- D 111,5 [4.39] Max.
- E 106,4 [4.19] Full Form Dia.
- F 6,9 [.27] Min. Full Form Dia.
- G 10,2 [.40] Min.
- H 86,1 [3.39] Max.
- J 66,5 [2.62] Dia.

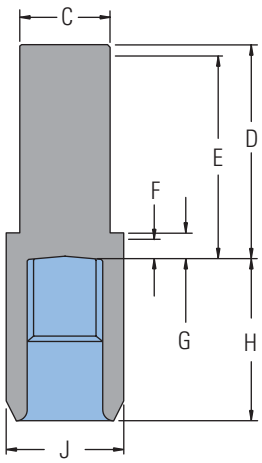

Mating Coupling Blank
Eaton Part No. 12778-002

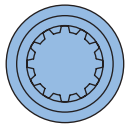

C-5

6000 Series

Installation Information

Bearingless

1 Internal spline in mating part to be as follows: Material to be ASTM A304, 8620H. Carbonize to a hardness of 60-64 HRc with case depth (to 50HRc) of 0,076 - 1,02 [.030 - .040] (dimensions apply after heat treat).

2 Mating part to have critical dimensions as shown. Oil holes must be provided and open for proper oil circulation.

3 Seal to be furnished with motor for proper oil circulation thru splines.

4 Some means of maintaining clearance between shaft and mounting flange must be provided.

5 Similar to SAE "C" Four Bolt Flange..

6 Counterbore designed to adapt to a standard sleeve bearing 50,010 - 50,038 [1.9689 - 1.9700] ID by 60,051 - 60,079 [2.3642 - 2.3653] O.D. (Oilite bronze sleeve bearing).

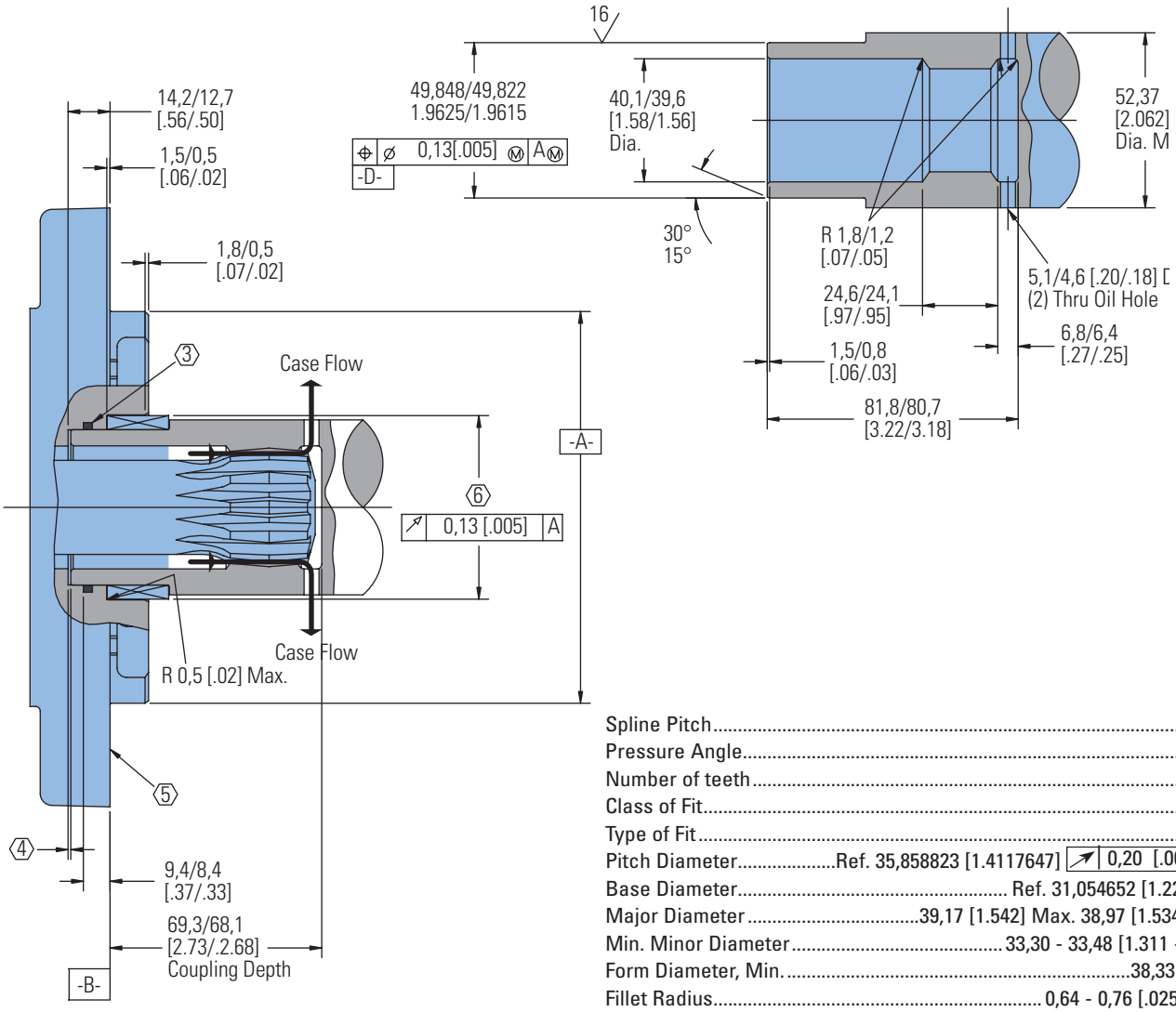

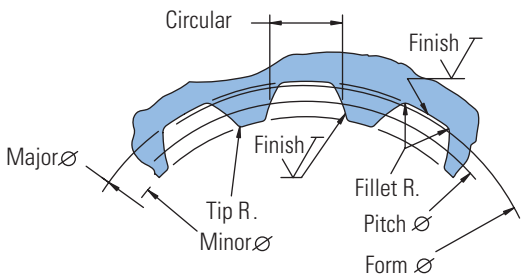

Spline Pitch	8.5/17
Pressure Angle	30°
Number of teeth	12
Class of Fit	Ref. 5
Type of Fit	Side
Pitch Diameter	Ref. 35,858823 [1.4117647] ↗ 0,20 [.008] D
Base Diameter	Ref. 31,054652 [1.2226241]
Major Diameter	39,17 [1.542] Max. 38,97 [1.534] Min..
Min. Minor Diameter	33,30 - 33,48 [1.311 - 1.318]
Form Diameter, Min.	38,33 [1.509]
Fillet Radius	0,64 - 0,76 [.025 - .030]
Tip Radius	0,25 - 0,51 [.010 - .020]
Finish	1,6 (63)
Involute Profile Variation	+0,000 -0,025 [+.0000 -.0010]
Total Index Variation	0,038 [.0015]
Lead Variation	0,013 [.0005]
Circular Space Width:	
Maximum Actual	5,898 [.2322]
Minimum Effective	5,804 [.2285]
Maximum Effective	Ref. 5,857 [.2306]
Minimum Actual	Ref. 5,834 [.2297]
Dimension Between Two Pins	Ref. 26,929 - 27,084 [1.0602 - 1.0663]
Pin Diameter	6,223 [.2450] Pins to Have 4,0 [.160] Wide Flat for Root Clearance

Dimensions

Shafts Splined

1 1/2 Inch Straight

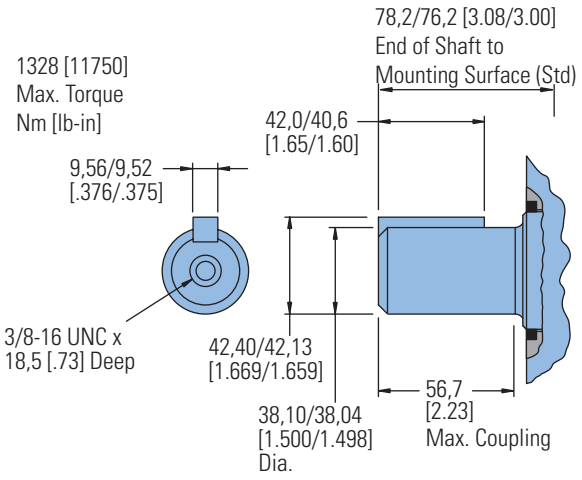

1 3/4 Inch Tapered

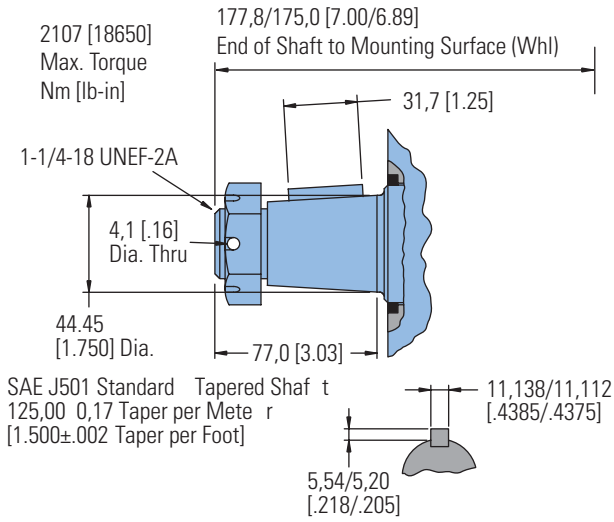

1 1/2 Inch 17 Tooth Splined

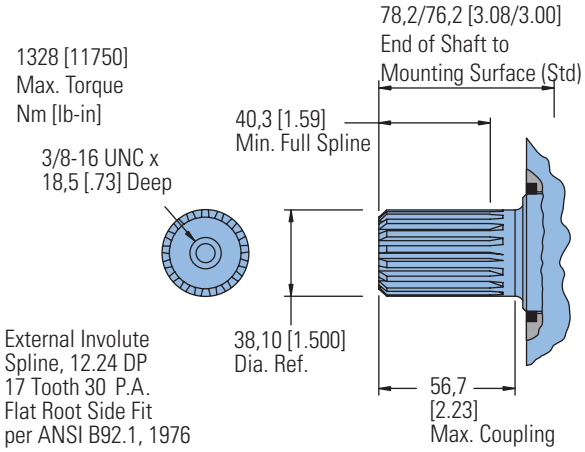

Tapered Shaft Hub Data

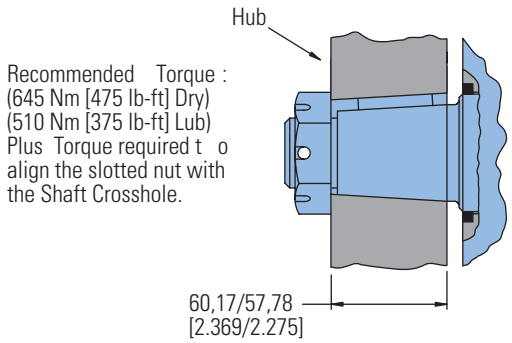

40 mm Straight

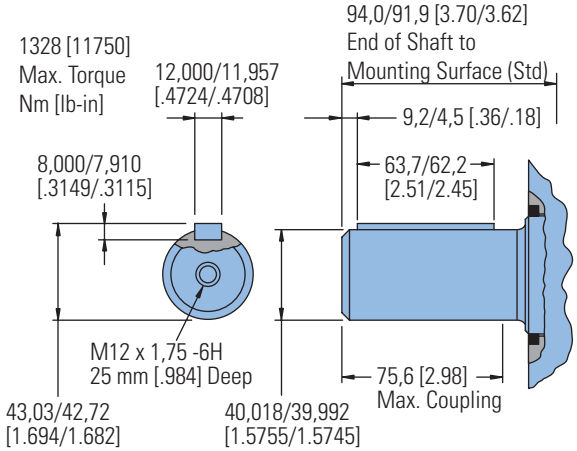

Slotted Hexagon Nut

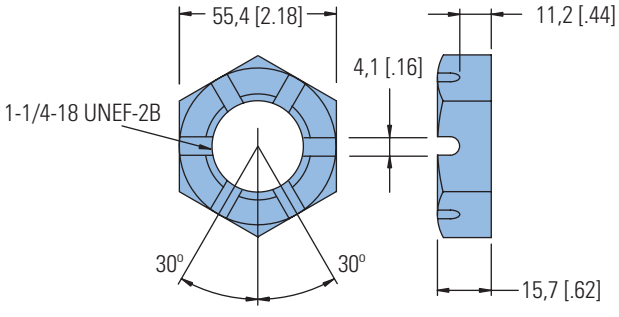

C-5

6000 Series

Shaft Side Load Capacity

These curves indicate the radial load capacity on the motor shaft(s) at various locations with an external thrust load of 454 kg [1000 lb]. The maximum allowable thrust load is 908 kg [2000 lb].

Note:

Case pressure will increase the allowable inward thrust load and decrease the allowable outward thrust load. Case pressure will push outward on the shaft at 109 kg/7 Bar [241 lb/100 PSI].

Each curve is based on

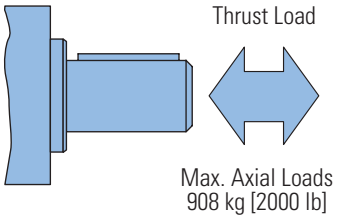

B 10 bearing life (2000 hours of 12,000,000 shaft revolutions at 100 RPM) at rated output torque.
To determine radial load at speeds other than 100 RPM, multiply the load values given on the bearing curve by the factors in the chart below.

RPM	Multiplication Factor
50	1.23
100	1.00
200	0.81
300	0.72
400	0.66
500	0.62
600	0.58
700	0.56
800	0.54

For 3,000,000 shaft revolutions or 500 hours–Increase these shaft loads 52%.

Standard Motor
Straight and Splined Shafts

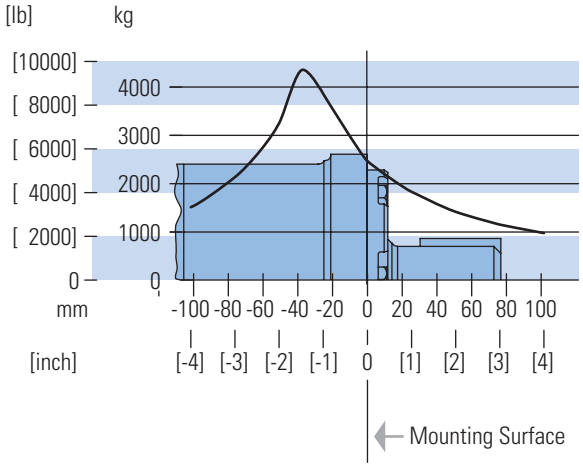

Wheel Motor Tapered Shaft

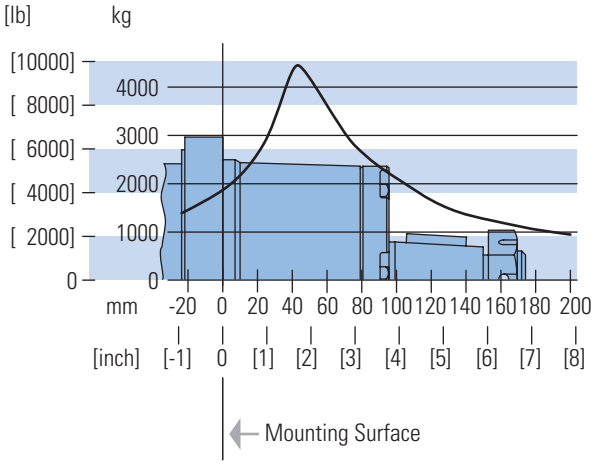

Case Pressure and Case Port

Char-Lynn 6000 Series motors are durable and have long life as long as the recommended case pressure is not exceeded. Allowable case pressure is highest at low shaft speeds. Consequently, motor life will be shortened if case pressure exceeds these ratings (acceptability may vary with application). Determine if an external case drain is required from the case pressure seal limitation chart.

Case Pressure Seal Limitation

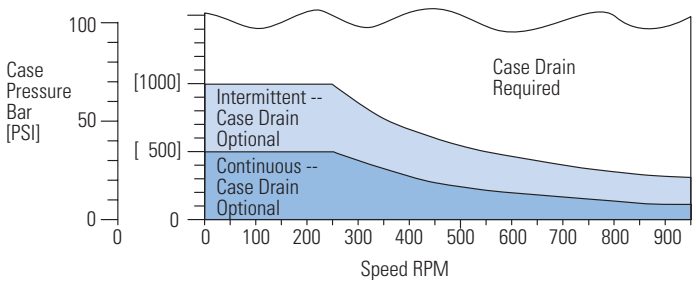

Case Porting Advantage

Contamination Control — flushing the motor case.

Cooler Motor — exiting oil draws motor heat away.

Extend Motor Seal Life — maintain low case pressure with a preset restriction in the case drain line.

1 5/16 -12 O-ring Ports (2) or G 1 (BSP) Ports (2)

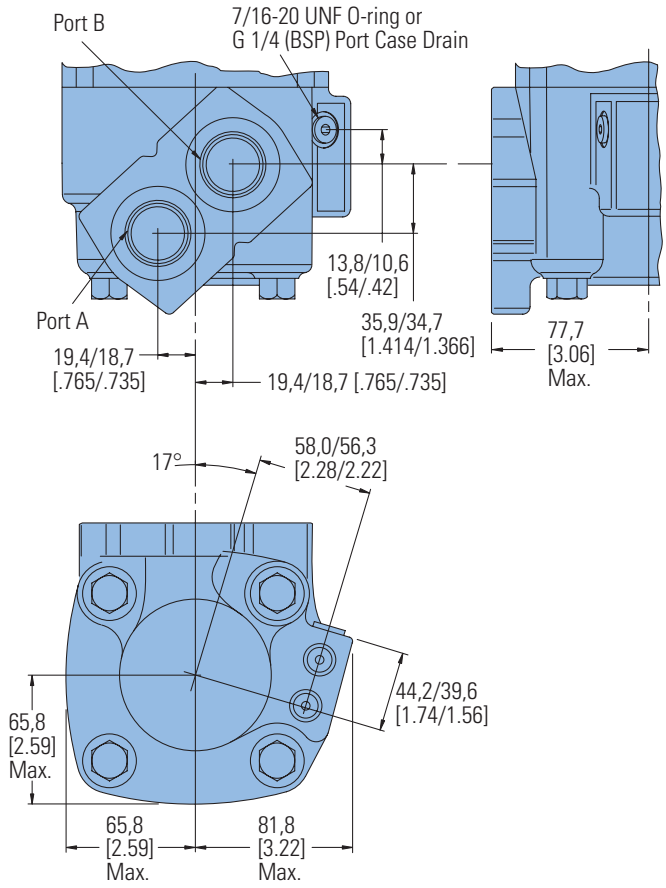

4 Bolt 3/4 Inch Split Flange

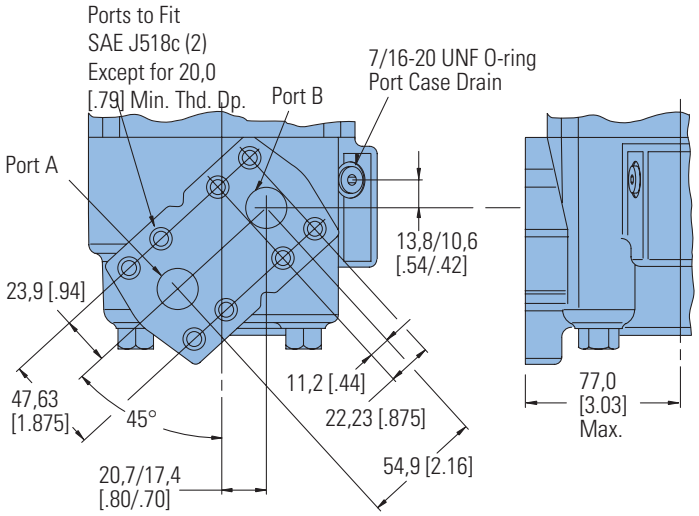

1 5/16 -12 O-ring Ports (2) with Shuttle

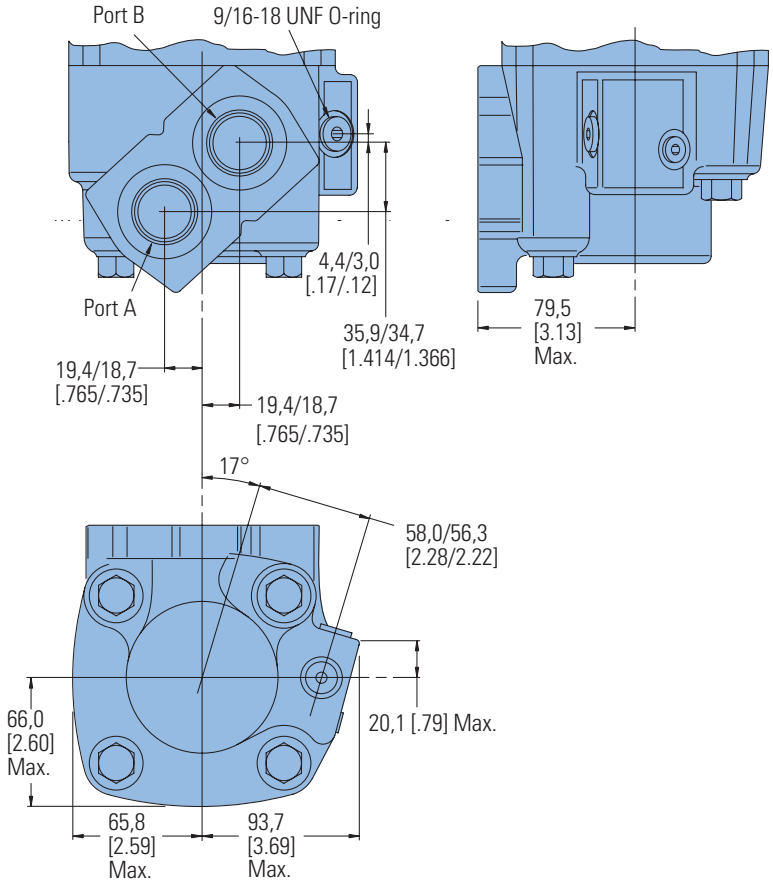

6000 Series

Product Numbers

Note:

For 6000 Series Motors with a configuration **Not Shown** in the charts above: Use model code number system on the next page to specify product in detail.

Use digit prefix — 112-, 113-, or 114 - plus four digit number from charts for complete product number— Example 114-1047.

Orders will not be accepted without three digit prefix.

MOUNTING	SHAFT	PORT SIZE	DISPL. cm^3/r [in^3/r] / PRODUCT NUMBER								
			195 [11.9]	245 [15.0]	310 [19.0]	390 [23.9]	490 [30.0]	625 [38.0]	735* [45.0]	805* [49.0]	985 [60.0]
Standard	1 1/2 inch Straight	1 5/16 O-ring	112-1064	-1065	-1066	-1067	-1068	-1107	-1145	—	-1069
	40 mm Straight	G 1 (BSP)	112-1094	-1095	-1096	-1097	-1098	—	—	—	-1099
	1 1/2 Inch 17 T Splined	1 5/16 O-ring	112-1058	-1059	-1060	-1061	-1062	-1109	1163	—	-1063
		G 1 (BSP)	112-1088	-1089	-1090	-1091	-1092	—	—	—	-1093
Wheel Motor	40 mm Straight	G 1 (BSP)	113-1082	-1083	-1084	-1085	-1086	-1100	—	—	-1087
	1-3/4 Inch Tapered	1 5/16 O-ring	113-1070	-1071	-1072	-1073	-1074	-1093	—	—	-1075
Bearingless		1 5/16 O-ring	114-1031	-1032	-1033	-1034	-1035	-1055	—	—	-1036
		G 1 (BSP)	114-1043	-1044	-1045	-1046	-1047	—	—	—	-1048

*New release

114-1047

Mounting Type - Standard (Code H), 4 Bolt:

- 160,0 [6.30] Pilot Dia.
- 18,01 [.709] Dia. Mounting Holes
- 200,0 [7.87] Dia. Bolt Circle

Output Shaft - Straight (Code 21)

Ports - G1 (BSP) Staggered G 1/4 Case Drain (Code C)

Paint - Low Gloss Black (Code A)

Use digit prefix — 112- plus four digit number from charts for complete product number— Example 112-1215.

Orders will not be accepted without three digit prefix.

MOUNTING	SHAFT	PORT SIZE	DISPL. cm^3/r [in^3/r] / PRODUCT NUMBER						
			310 [19.0]	390 [23.9]	490 [30.0]	625 [38.0]	735 [45.0]	805 [49.0]	985 [60.0]
Standard	50 mm Straight	G 1 (BSP)	112-1217	-1218	-1215	-1216	-1247	-1219	-1220

112-1215

C-5

6000 Series

Model Code

The following 30-digit coding system has been developed to identify all of the configuration options for the 6000 Series motor. Use this model code to specify a motor with the desired features. All 30-digits of the code must be present when ordering. You may want to photocopy the matrix below to ensure that each number is entered in the correct box.

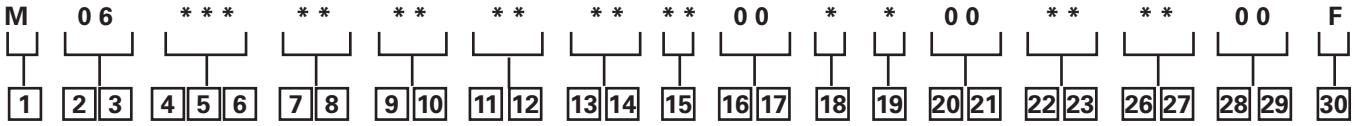

1 Product
M – Motor

2, 3 Series
06 – 6000 Series

4, 5, 6 Displacement cm³/r [in³/r]
120 – 195.8 [11.95]
150 – 246.5 [15.04]
190 – 312.0 [19.04]
239 – 391.7 [23.90]
300 – 491.4 [29.99]
381 – 624.2 [38.09]
450 – 737.4 [45.00]
490 – 803.4 [49.03]
600 – 982.7 [59.97]

7, 8 Mounting Type
AA – Bearingless, 4 Bolt: 127,0 [5.00] Pilot Dia. and 14,35 [.565] Dia. Holes 162,0 [6.38] Dia. Bolt Circle
AB – Standard, 4 Bolt (SAE CC): 127,0 [5.00] Pilot Dia. and 14,35 [.565] Dia. Holes on 162,0 [6.38] Dia. B.C.
AC – Wheel, 4 Bolt 139,7 [5.50] Pilot Dia. and 14,35 [.565] Dia. Holes on 184,2 [7.25] Dia. Bolt Circle
AD – Standard, 4 Bolt, (SAE D): 152,4 [6.00] Pilot Dia. 15.24 [.600] Dia. Holes on 228.6 [9.00] Dia. Bolt Circle (SAE D) with O-Ring Groove to Accept ARP-163 O-Ring
AH – Standard, 4 Bolt: 10.0 [6.30] Pilot Dia. 18,01 [.709] Dia. Holes on 200.0 [7.87] Dia. Bolt Circle.
AL - Wheel, 4 Bolt: 160.0 [6.30] Pilot Dia. with 5.8 [.23] Pilot Length and 18.00 [.709] Dia. Holes on 200.0 [7.874] Bolt Circle (ISO Compatible)

9, 10 Output Shaft Description
00 – None (Bearingless)
01 – 38,10 [1.50) Dia. Straight Shaft with .375-16 UNC-2B Thread in End, 9,52 [.375] Sq x 41,28 [1.625] Straight Key
02 – 44,45 [1.75] Dia. .125:1 Tapered Shaft per SAE J501 with 1.25-18 UNEF-2A Threaded Shaft End, 11,11 [.4375] Sq. x 31,8 [1.25] Straight Key
03 – 38,10 [1.50] Dia. Flat Root Side Fit, 17 Tooth, 12/24 DP 30 DEG. Involute Spline with .375-16 UNC-2B Thread in end 40,4 [1.59] Minimum Full Spline Length
04 – 40,00 [1.575] Dia. Straight Shaft with M12 x 1.75-6H Thread in End, 12W x 8H x 63L [.472W x .313H x 2.480L] Key
12– 49,99 [1.968] Dia. Straight Shaft with M12 x 1.75-6H Thread in End, 14W x 9H x 70L [.550W x .354H x 2.756L] Key
15 – 60mm Dia. 10:1 Tapered Shaft per ISO R775 with M42 x 3-6H Threaded Shaft End, 16W x 10H x 32L [.630W x .394H x 1.26L] Key
16 – 53,98 [2.125] Dia. Flat Root Side Fit, 16 Tooth, 8/16 DP 30 Deg. Involute Spline with M12 x 1.75-6H Thread in End, 55,9 [2.20] Min Full Spline

11, 12 Port Description
AA – 1,3125-12 UN-2B SAE O-Ring Ports–Staggered Ports
AB – SAE 19.05 [.750] Dia. 4-Bolt Split Flange - Staggered Ports
AC – G 1 Staggered Ports
AG – .750-16 UNF-2B SAE O-ring Ports - Staggered

13, 14 Case Flow
02 – .4375-20 UNF-2B SAE O-Ring Port With Check Valve
03 – G 1/4 BSP Straight Thread Port with Check Valve
06 –.5625-18 UNF-2B SAE O-Ring Port with Shuttle Valve
10 – .750-16 UNF-2B SAE O-ring Ports, External Lubrication Circuit Requires Case Drain must be Connected, .063 Shuttle Flow Orifice

15 Low Pressure Relief
0 – None
A – Set at 4.5 [65 lbf/in²]
B – Set at 15.2 [220 lbf/in²]

16, 17 Pressure/Flow Option
00 – None

18 Geroler Option
0 – Standard
2 – Tight Fitting

19 Seal Option
0 – Standard
00 – Standard Seals
02 – Seal Guard
03 – Viton Seals
04 – Viton Shaft Seal
11 – High pressure shaft seal, slinger seal
19 – Extreme duty seal guard

20, 21 Accessories
00 – None

22, 23 Special Features (Hardware)
00 – None
01 – Non-Masked Nameplate
02 – Non-Masked Nameplate, Low Noise Valve Plate
03 – Low Noise Valve Plate

24, 25 Special Features (Assembly)
00 – None
AA – Reverse Rotation

26, 27 Paint/Packaging
00 – No Paint, Individual Box
AA – Low Gloss Black Primer
AD – No Paint, Bulk Box Option
AE – Low Gloss Black Primer, Bulk Box Option

28, 29 Customer ID
00 – None

30 Design Code
F – Sixth

Feature in bold are preferred and allow for shorter lead time

10,000 Series

Highlights

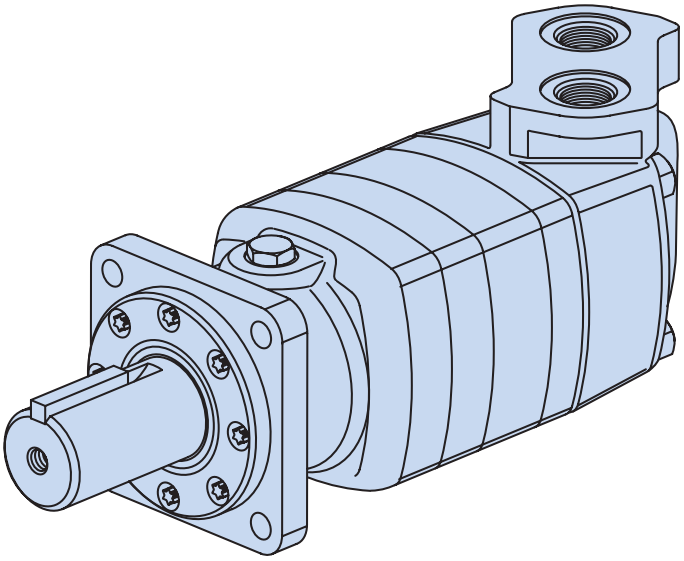

Features

- High torque and flow
- Many options like 2 speed and speed sensors make this motor "smart"
- Low pressure loss even in higher flows

Benefits

- High power density for demanding mobile and industrial applications
- Many options to draw from

Applications

- Boring
- Industrial
- Metal Forming
- Port Equipment
- Saw Mill

Description

This is the biggest disc valve motor of our line with up to 45 GPM and 24,000 in-lb of torque in continuous mode, this motor is powerful and yet provides good efficiency.

Specifications

Geroler Element	4 Displacements
Flow l/min [GPM]	170 [45] Continuous**
	265 [70] Intermittent*
Speed RPM	501 Cont.**
	784 Inter.*
Pressure bar [PSI]	200 [3000] Cont.**
	270 [4000] Inter.*
Torque Nm [lb-in]	2700 [23910] Cont.**
	3440 [30460] Inter.*

** Continuous— (Cont.) Continuous rating, motor may be run continuously at these ratings.
* Intermittent— (Inter.) Intermittent operation, 10% of every minute.



Boring



Metal Forming



Port Equipment

10,000 Series

Specifications

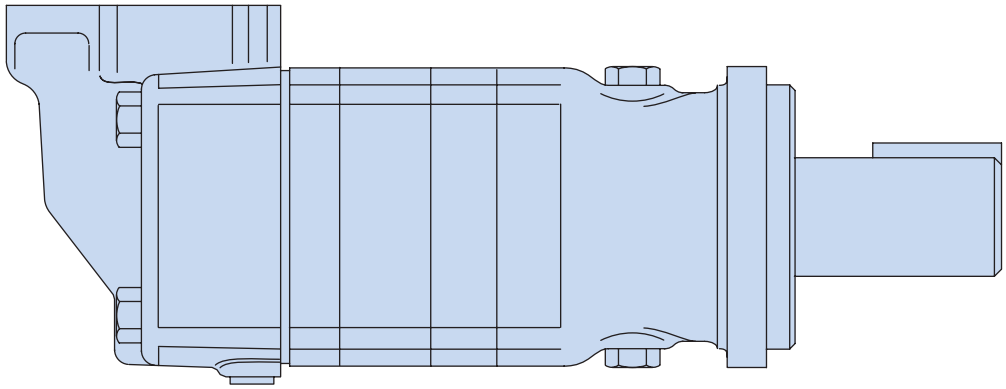

10,000 SERIES MOTORS

Displ. cm³/r [in³/r]		345 [21.0]	480 [29.3]	665 [40.6]	940 [57.4]
Max. Speed (RPM) @ Flow	Continuous	501	354	254	179
	Intermittent	784	552	396	279
Flow l/min [GPM]	Continuous	170 [45]	170 [45]	170 [45]	170 [45]
	Intermittent	265 [70]	265 [70]	265 [70]	265 [70]
Torque* Nm [lb-in]	Continuous	1040 [9220]	1475 [13050]	2085 [18450]	2700 [23910]
	Intermittent	1390 [12310]	1965 [17410]	2610 [23080]	3440 [30460]
Pressure Δ bar [Δ PSI]	Continuous	205 [3000]	205 [3000]	205 [3000]	190 [2750]
	Intermittent	275 [4000]	275 [4000]	260 [3750]	240 [3500]
	Peak	275 [4000]	275 [4000]	275 [4000]	260 [3750]
Weight kg [lb]	Standard or Wheel Mount	43,5 [96.0]	45,4 [100.0]	46,3 [100.0]	47,2 [104.0]
	Bearingless	31,3 [69.0]	33,1 [73.0]	33,1 [73.0]	34,9 [77.0]

*See shaft torque ratings for limitations..

Note:

To assure best motor life, run motor for approximately one hour at 30% of rated pressure before application to full load. Be sure motor is filled with fluid prior to any load applications.

Maximum Inlet Pressure:

275 bar [4000 PSI]

Do not exceed Δ pressure rating (see chart above).

Maximum Return Pressure:

275 bar [4000 PSI] with case drain line installed.

Do not exceed Δ pressure rating (see chart above).

Maximum Case Pressure:

20 bar [300 PSI]

Δ bar [Δ PSI] :

The true pressure difference between inlet port and outlet port

Continuous Rating:

Motor may be run continuously at these ratings

Intermittent Operation:

10% of every minute

Peak Operation:

1% of every minute

Recommended Fluids:

Premium quality, anti-wear type hydraulic oil with a viscosity of not less than 70 SUS at operating temperature.

Recommended System Operating Temp.:

-34°C to 82°C [-30°F to 180°F]

Recommended Filtration:

per ISO Cleanliness Code, 4406: 20/18/13

10,000 Series

Performance Data

Motors run with high efficiency in all areas designated with a number for torque and speed. For best motor life select a motor to run with a torque and speed range shown in the light shaded area.

Performance data is typical at 120 SUS. Actual data may vary slightly from unit to unit in production.

Continuous

Peak

Intermittent

No Operation

480cm³/r [29.3 in³/r]
ΔPressure Bar [PSI]

Flow LPM [GPM]	[250] 15	[500] 35	[1000] 70	[1500] 105	[2000] 140	[2500] 170	[3000] 205	[3500] 240	[4000] 275
[1] 3,8	[760] 85 6	[1540] 175 5	[3120] 355 4	[4640] 525 2					
[2] 7,5	[1040] 120 15	[2140] 240 13	[4320] 490 11	[6500] 735 8	[8690] 980 5	[10870] 1230 2			
[4] 15	[1040] 120 31	[2130] 240 29	[4310] 485 27	[6490] 735 24	[8680] 980 21	[10860] 1225 18	[13050] 1475 16	[15230] 1720 13	[17410] 1965 10
[8] 30	[1020] 115 62	[2110] 240 61	[4290] 485 58	[6480] 730 55	[8660] 980 53	[10840] 1225 50	[13030] 1470 47	[15210] 1720 44	[17390] 1965 42
[12] 45	[990] 110 94	[2080] 235 93	[4270] 480 90	[6450] 730 87	[8630] 975 84	[10820] 1220 81	[13000] 1470 78	[15180] 1715 75	[17370] 1965 73
[16] 61	[960] 110 125	[2060] 235 124	[4240] 480 122	[6420] 725 119	[8600] 970 116	[10790] 1220 113	[12970] 1465 110	[15150] 1710 107	[17340] 1960 104
[20] 76	[930] 105 157	[2020] 230 156	[4200] 475 154	[6390] 720 150	[8570] 970 147	[10750] 1215 144	[12940] 1460 141	[15120] 1710 138	[17300] 1955 135
[24] 91	[890] 100 189	[1980] 225 188	[4170] 470 185	[6350] 715 182	[8530] 965 179	[10720] 1210 175	[12900] 1460 172	[15080] 1705 169	
[28] 106	[850] 95 221	[1940] 220 220	[4130] 465 217	[6310] 715 214	[8490] 960 210	[10680] 1205 207	[12860] 1455 203	[15040] 1700 200	
[32] 121	[810] 90 252	[1900] 215 251	[4080] 460 249	[6270] 710 245	[8450] 955 242	[10630] 1200 238	[12820] 1450 235	[15000] 1695 231	
[36] 136	[760] 85 282	[1850] 210 281	[4040] 455 280	[6220] 705 277	[8400] 950 273	[10590] 1195 270	[12770] 1445 266		
[40] 151	[710] 80 318	[1800] 205 316	[3990] 450 312	[6170] 695 308	[8350] 945 305	[10540] 1190 301	[12720] 1440 297		
[45] 170	[647] 75 354	[1740] 195 353	[3920] 445 351	[6110] 690 348	[8290] 935 344	[10470] 1185 340	[12660] 1430 336		
[60] 227	[430] 50 474	[1520] 170 473	[3710] 420 471	[5890] 665 467	[8070] 910 462	[10260] 1160 458	[12440] 1405 454		
[70] 265		[1360] 155 552	[3540] 400 550	[5730] 645 546	[7910] 895 541	[10100] 1140 536	[12280] 1385 532		

345cm³/r [21.0 in³/r]
ΔPressure Bar [PSI]

Flow LPM [GPM]	[250] 15	[500] 35	[1000] 70	[1500] 105	[2000] 140	[2500] 170	[3000] 205	[3500] 240	[4000] 275
[1] 3,8	[600] 70 3	[1310] 150 1							
[2] 7,5	[740] 85 21	[1510] 170 19	[3050] 345 15	[4600] 520 11	[6140] 695 8	[7680] 865 4			
[4] 15	[730] 80 43	[1500] 170 41	[3040] 345 37	[4590] 520 33	[6140] 695 30	[7680] 870 26	[9220] 1040 22	[10770] 1215 18	[12310] 1390 14
[8] 30	[720] 80 87	[1490] 170 86	[3030] 340 82	[4580] 515 78	[6120] 690 74	[7670] 865 70	[9210] 1040 66	[10750] 1215 62	[12300] 1390 58
[12] 45	[700] 80 131	[1470] 165 130	[3020] 340 127	[4560] 515 123	[6100] 690 118	[7650] 865 114	[9190] 1040 110	[10740] 1215 106	[12280] 1385 102
[16] 61	[680] 75 176	[1450] 165 175	[3000] 340 172	[4540] 515 167	[6080] 685 163	[7630] 860 158	[9170] 1035 154	[10720] 1210 149	[12260] 1385 145
[20] 76	[660] 75 221	[1430] 160 220	[2970] 335 217	[4520] 510 212	[6060] 685 207	[7600] 860 202	[9150] 1035 198	[10690] 1210 193	[12230] 1380 189
[24] 91	[630] 70 266	[1400] 160 265	[2950] 335 261	[4490] 505 256	[6030] 680 252	[7580] 855 246	[9120] 1030 242	[10660] 1205 237	[12210] 1380 232
[28] 106	[600] 70 310	[1370] 155 309	[2920] 330 306	[4460] 505 301	[6000] 680 296	[7550] 855 291	[9090] 1025 286	[10640] 1200 280	[12180] 1375 275
[32] 121	[570] 65 356	[1340] 150 355	[2890] 325 351	[4430] 500 346	[5970] 675 340	[7520] 850 335	[9060] 1025 329	[10610] 1200 324	[12150] 1370 319
[36] 136	[540] 60 400	[1310] 150 399	[2850] 320 396	[4400] 495 390	[5940] 670 384	[7480] 845 379	[9030] 1020 373	[10570] 1195 368	[12120] 1370 362
[40] 151	[500] 55 445	[1270] 145 444	[2820] 320 441	[4360] 495 435	[5910] 670 429	[7450] 840 423	[8990] 1015 417	[10540] 1190 412	
[45] 170	[460] 50 501	[1220] 140 500	[2760] 310 498	[4300] 485 492	[5840] 660 486	[7380] 835 480	[8910] 1005 473	[10450] 1180 467	
[60] 227		[1080] 130 668	[2620] 295 665	[4160] 470 658	[5710] 645 651	[7250] 820 644	[8800] 995 637		
[70] 265		[960] 110 784	[2510] 285 777	[4050] 460 769	[5590] 630 761	[7140] 805 754	[8680] 980 746		

[2510] 285 777 } Torque [lb-in] Nm Speed RPM

C-6

10,000 Series

Performance Data

Motors run with high efficiency in all areas designated with a number for torque and speed. For best motor life select a motor to run with a torque and speed range shown in the light shaded area.

Performance data is typical at 120 SUS. Actual data may vary slightly from unit to unit in production.

Continuous

Intermittent

Peak

No Operation

665cm³/r [40.6 in³/r]
ΔPressure Bar [PSI]

Flow LPM [GPM]

	[250] 15	[500] 35	[750] 50	[1000] 70	[1250] 85	[1500] 105	[1750] 120	[2000] 140	[2250] 155	[2500] 170	[2750] 190	[3000] 205	[3250] 225	[3500] 240	[3750] 260
[1] 3,8	[1470] 165 4	[3010] 340 3	[4550] 515 3	[6100] 690 2	[7630] 860 1										
[2] 7,5	[1480] 165 10	[3020] 340 9	[4560] 515 8	[6110] 690 7	[7650] 865 7	[9200] 1040 6	[10740] 1215 5	[12280] 1385 4	[13830] 1565 3	[15370] 1735 2	[16910] 1910 1				
[4] 15	[1470] 165 22	[3010] 340 21	[4550] 515 20	[6100] 690 19	[7640] 865 18	[9190] 1040 17	[10730] 1210 16	[12270] 1385 15	[13820] 1560 14	[15360] 1735 13	[16900] 1910 12	[18450] 2085 11	[19990] 2260 10	[21540] 2435 9	[23080] 2610 8
[8] 30	[1440] 165 44	[2980] 335 43	[4530] 510 42	[6070] 685 41	[7610] 860 40	[9160] 1035 39	[10700] 1210 38	[12250] 1385 37	[13790] 1560 36	[15330] 1730 35	[16880] 1905 34	[18420] 2080 33	[19960] 2255 32	[21510] 2430 32	[23050] 2605 31
[12] 45	[1400] 160 67	[2950] 335 66	[4490] 505 65	[6040] 680 64	[7580] 855 63	[9120] 1030 62	[10670] 1205 61	[12210] 1380 60	[13750] 1555 59	[15300] 1730 58	[16840] 1905 57	[18380] 2075 56	[19930] 2255 55	[21470] 2425 54	[23020] 2600 53
[16] 61	[1360] 155 89	[2910] 330 88	[4450] 505 87	[5990] 675 86	[7540] 850 85	[9080] 1025 84	[10620] 1200 83	[12170] 1375 82	[13710] 1550 81	[15260] 1725 80	[16800] 1900 79	[18340] 2070 78	[19890] 2245 77	[21400] 2420 76	
[20] 76	[1310] 150 112	[2860] 375 111	[4400] 495 110	[5940] 670 109	[7490] 845 108	[9030] 1020 107	[10580] 1195 106	[12120] 1370 104	[13660] 1545 103	[15210] 1720 102	[16750] 1890 101	[18300] 2070 100	[19840] 2240 99		
[24] 91	[1260] 140 135	[2800] 315 134	[4350] 490 132	[5890] 665 131	[7440] 840 130	[8980] 1015 129	[10520] 1190 128	[12070] 1365 127	[13610] 1540 126	[15150] 1710 124	[16700] 1885 123	[18240] 2060 122			
[28] 106	[1200] 135 157	[2750] 310 156	[4290] 485 155	[5840] 660 154	[7380] 835 153	[8920] 1010 151	[10470] 1185 150	[12010] 1355 149	[13550] 1530 148	[15100] 1705 147	[16640] 1880 146				
[32] 121	[1140] 130 180	[2690] 305 179	[4230] 480 177	[5770] 650 176	[7320] 825 175	[8860] 1000 174	[10400] 1175 173	[11950] 1350 172	[13490] 1525 170	[15040] 1700 169	[16580] 1875 168				
[36] 136	[1080] 120 202	[2620] 295 201	[4160] 470 200	[5710] 645 199	[7250] 820 198	[8800] 995 196	[10340] 1170 195	[11880] 1340 194	[13430] 1515 193	[14970] 1690 191	[16510] 1865 190				
[40] 151	[1010] 115 225	[2550] 290 224	[4100] 465 222	[5640] 635 221	[7180] 810 220	[8730] 985 219	[10270] 1160 217	[11810] 1335 216	[13360] 1510 215	[14900] 1685 214	[16440] 1855 212				
[45] 170	[920] 105 254	[2460] 280 252	[4000] 450 251	[5550] 625 249	[7090] 800 248	[8630] 975 247	[10180] 1150 245	[11720] 1325 244	[13260] 1500 243	[14810] 1675 242					
[60] 227	[610] 70 338	[2150] 245 336	[3700] 420 335	[5240] 590 334	[6780] 765 332	[8330] 940 331	[9870] 1115 329	[11420] 1290 328	[12960] 1465 327						
[70] 265	[380] 45 396	[1930] 220 393	[3470] 390 391	[5010] 565 390	[6560] 740 388	[8100] 915 387	[9640] 1090 385	[11190] 1265 384							

[3470] 390 391 } Torque [lb-in] Nm Speed RPM

940cm³/r [57.4 in³/r]
ΔPressure Bar [PSI]

Flow LPM [GPM]

	[250] 15	[500] 35	[750] 50	[1000] 70	[1250] 85	[1500] 105	[1750] 120	[2000] 140	[2250] 155	[2500] 170	[2750] 190	[3000] 205	[3250] 225	[3500] 240
[1] 3, 8	[2080] 235 3	[4260] 480 2	[6440] 730 1											
[2] 7,5	[2090] 235 7	[4270] 480 6	[6450] 730 5	[8640] 975 5	[10820] 1220 4	[13000] 1470 3	[15190] 1715 2	[17370] 1965 1						
[4] 15	[2080] 235 15	[4260] 480 14	[6440] 730 13	[8620] 975 13	[10810] 1220 12	[12990] 1470 11	[15170] 1715 10	[17360] 1960 9	[19540] 2210 8	[21720] 2455 7	[23910] 2700 7	[26090] 2950 6	[28270] 3195 5	[30460] 3440 4
[8] 30	[2040] 230 31	[4220] 475 30	[6400] 725 29	[8590] 970 28	[10770] 1215 28	[12950] 1465 27	[15140] 1710 26	[17320] 1955 25	[19500] 2200 24	[21690] 2450 23	[23870] 2695 22			
[12] 45	[1990] 225 47	[4170] 470 46	[6350] 715 45	[8540] 965 44	[10720] 1210 43	[12900] 1460 43	[15090] 1705 42	[17270] 1950 41	[19450] 2200 40	[21640] 2445 39				
[16] 61	[1930] 220 63	[4110] 465 62	[6290] 710 61	[8480] 960 60	[10660] 1205 59	[12840] 1450 58	[15030] 1700 58	[17210] 1945 57	[19390] 2190 56					
[20] 76	[1860] 210 79	[4040] 455 78	[6220] 705 77	[8410] 950 76	[10590] 1195 75	[12770] 1445 74	[14960] 1690 73	[17140] 1935 72	[19320] 2185 72					
[24] 91	[1780] 200 95	[3970] 450 94	[6150] 695 93	[8330] 940 92	[10520] 1190 91	[12700] 1435 90	[14880] 1680 89	[7070] 1930 88						
[28] 106	[1700] 190 111	[3890] 440 110	[6070] 685 109	[8250] 930 108	[10440] 1180 107	[12620] 1425 106	[14800] 1675 105	[16990] 1920 104						
[32] 121	[1620] 185 127	[3800] 430 126	[5980] 675 125	[8160] 920 124	[10350] 1170 123	[12530] 1415 122	[14720] 1665 121							
[36] 136	[1520] 170 143	[3710] 420 142	[5890] 665 141	[8070] 910 140	[10260] 1160 139	[12440] 1405 138	[14620] 1650 137							
[40] 151	[1420] 160 159	[3610] 410 158	[5790] 655 157	[7970] 900 156	[10160] 1150 155	[12340] 1395 154	[14520] 1640 153							
[45] 170	[1290] 145 179	[3480] 395 178	[5660] 640 177	[7840] 885 176	[10020] 1130 174	[12210] 1380 174	[14400] 1625 173							
[60] 227	[860] 95 239	[3040] 345 238	[5230] 590 236	[7410] 835 235	[9600] 1085 234	[11780] 1330 233								
[70] 265	[540] 60 279	[2720] 305 278	[4910] 555 276	[7090] 800 275	[9270] 1045 274	[11460] 1295 273								

10,000 Series

Dimensions

Ports

1 5/16 -12 UN-2B SAE O-ring Staggered Ports (2)
9/16 -18 UNF-2B SAE O-ring Case Drain Port (1) or
4 Bolt 1 1/4 inch Split Flange Ports (2)
9/16 -18 UNF-2B SAE O-ring Case Drain Port (1)

Standard Rotation Viewed from Shaft End

Port A Pressurized — CW
Port B Pressurized — CCW

Standard Mount

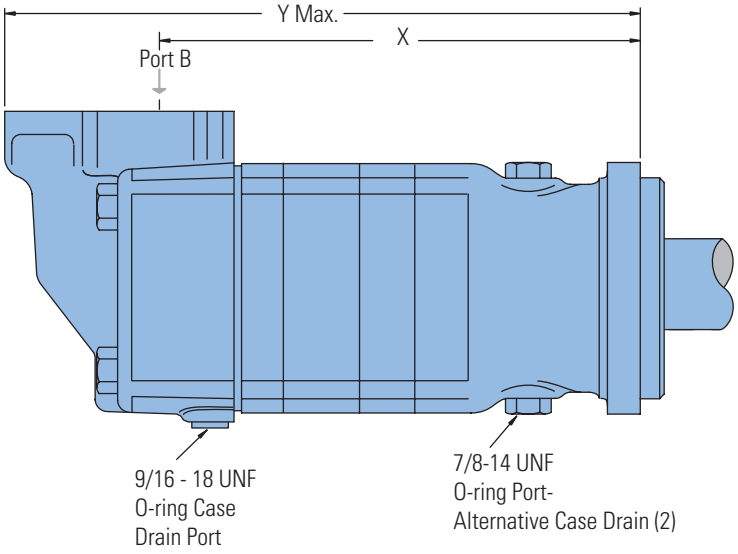

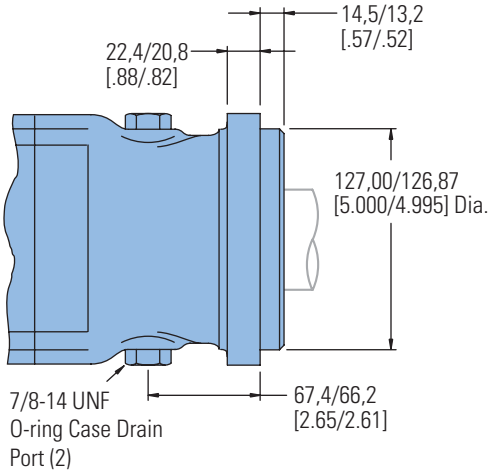

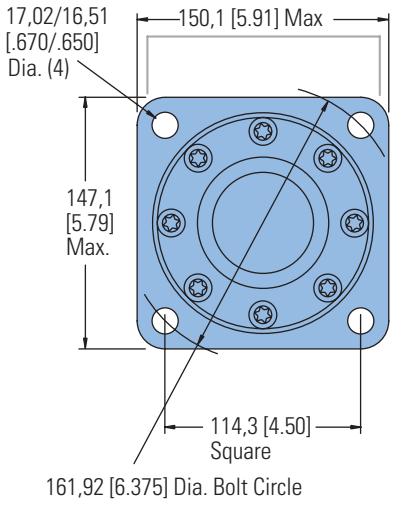

STANDARD MOUNT MOTOR DIMENSIONS

Displacement cm³/r [in³/r]	X mm [inch]	Y mm [inch]
345 [21.0]	282,4 [11.12]	380,7 [14.99]
480 [29.2]	295,1 [11.62]	393,4 [15.49]
665 [40.6]	295,1 [11.62]	393,4 [15.49]
940 [57.4]	313,4 [12.34]	411,7 [16.21]

C-6

10,000 Series

Dimensions

Ports

1 5/16 -12 UN-2B SAE O-ring Staggered Ports (2)
9/16 -18 UNF-2B SAE O-ring Case Drain Port (1) or

4 Bolt 1 1/4 inch Split Flange Ports (2)
9/16 -18 UNF-2B SAE O-ring Case Drain Port (1)

Standard Rotation Viewed from Shaft End

Port A Pressurized — CW
Port B Pressurized — CCW

Wheel Mount

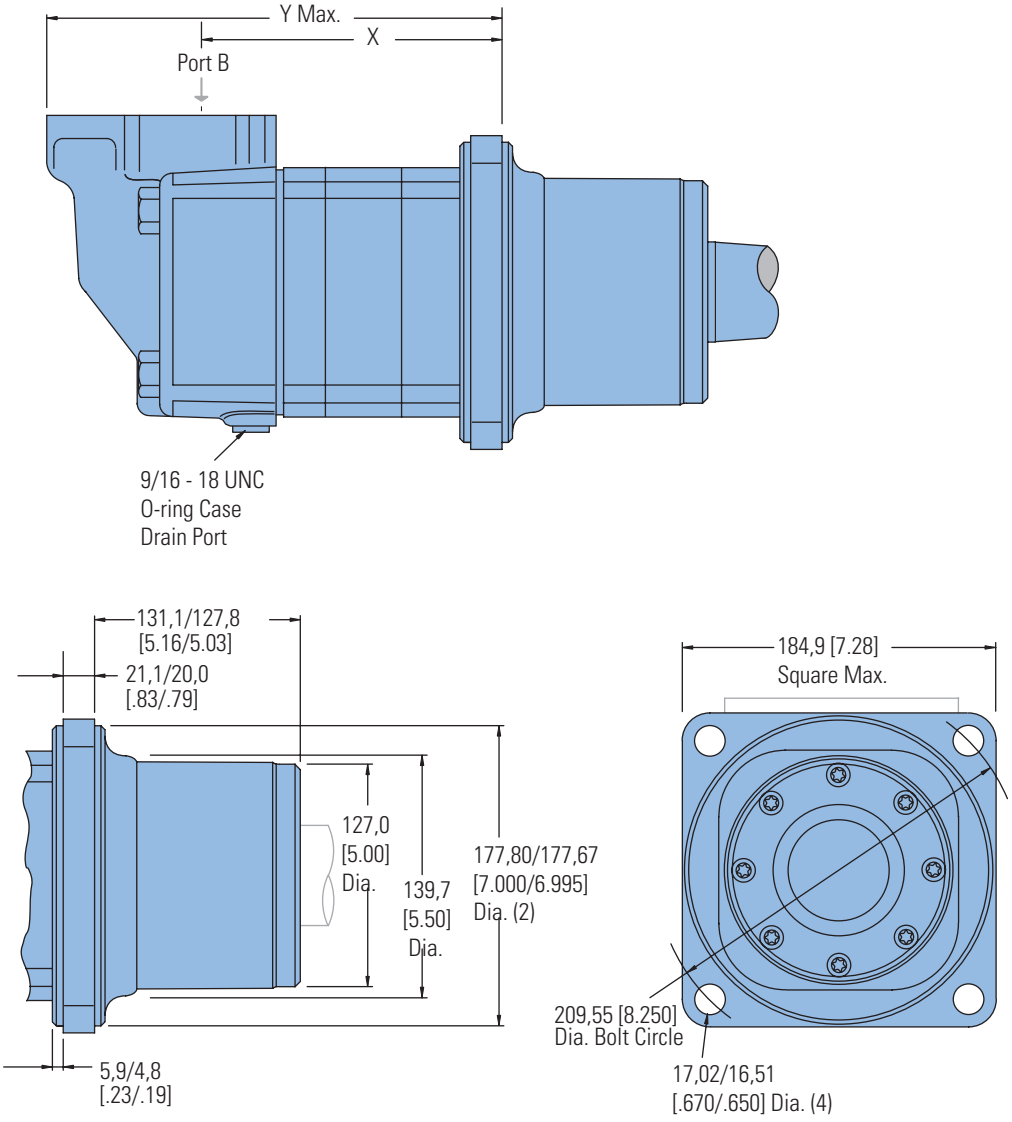

WHEEL MOUNT MOTOR DIMENSIONS

Displacement cm^3/r [in^3/r]	X mm [inch]	Y mm [inch]
345 [21.0]	166,9 [6.57]	265,9 [10.47]
480 [29.2]	179,6 [7.07]	278,6 [10.97]
665 [40.6]	179,6 [7.07]	278,6 [10.97]
940 [57.4]	197,8 [7.79]	297,2 [11.70]

10,000 Series

Dimensions

Bearingless

Ports

1 5/16 -12 UN-2B SAE O-ring Staggered Ports (2)
9/16 -18 UNF-2B SAE O-ring Case Drain Port (1) or

4 Bolt 1 1/4 inch Split Flange Ports (2)
9/16 -18 UNF-2B SAE O-ring Case Drain Port (1)

Standard Rotation Viewed from Shaft End

Port A Pressurized — CW
Port B Pressurized — CCW

Bearingless

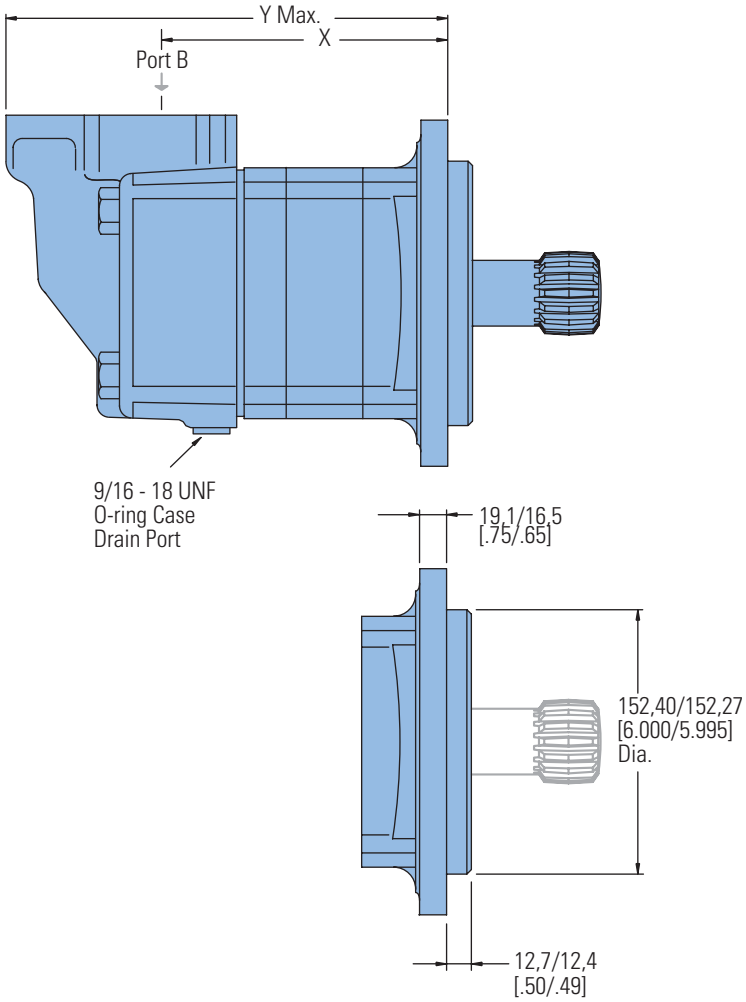

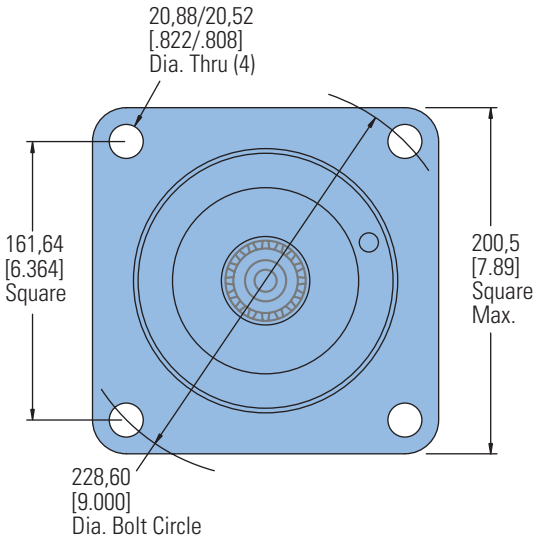

BEARINGLESS MOTOR DIMENSIONS

Displacement cm³/r [in³/r]	X mm [inch]	Y mm [inch]
345 [21.0]	158,0 [6.22]	256.3 [10.09]
480 [29.2]	170,7 [6.72]	269,0 [10.59]
665 [40.6]	170,7 [6.72]	269,0 [10.59]
940 [57.4]	189,0 [7.44]	287,5 [11.32]

Mating Coupling Blank

Dimension D mm [inch] Eaton Part No.	
13280-001	133,6/128,5 [5.26/5.06]
13280-002	156,0/150,9 [6.14/5.94]

For 10,000 bearingless motor application information, contact your Eaton representative (mating coupling blanks available from Eaton Hydraulics).

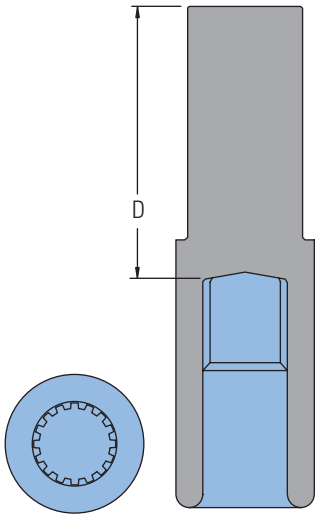

Note:

After machining blank, part must be hardened per Eaton specification.

10,000 Series

Installation Information

Bearingless

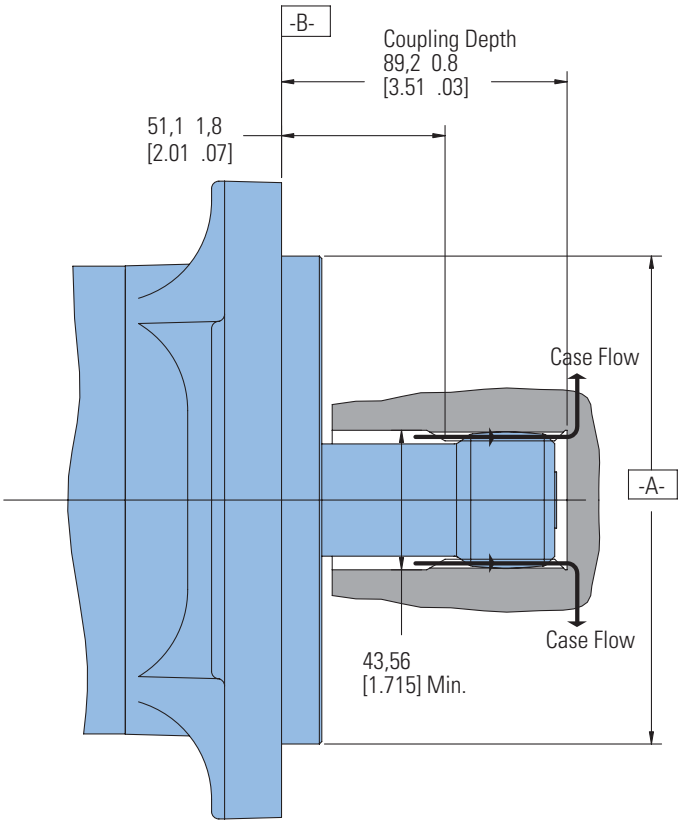

1 Internal spline in mating part to be as follows: Material to be ASTM A304, 8620H. Carbonize to a hardness of 60-64 HRc with case depth (to 50HRc) of 0,076 - 1,02 [.030 - .040] (dimensions apply after heat treat).

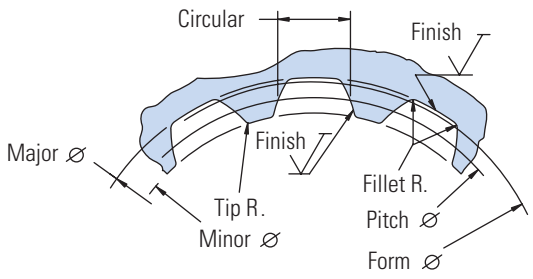

Spline Pitch	10/20
Pressure Angle	30°
Number of teeth	16
Class of Fit	Ref. 5
Type of Fit	Side
Pitch Diameter	Ref. 40,640000 [1.6000000] ⌾ 0,25 [.010] D
Base Diameter	Ref. 35,195272 [1.3856406]
Major Diameter	43,56 [1.715] Max. 43,18 [1.700] Min.
Min. Minor Diameter	36,83 - 37,08 [1.450 - 1.460]
Form Diameter, Min.	42,47 [1.672]
Fillet Radius	0,64 - 0,76 [.025 - .030]
Tip Radius	0,25 - 0,51 [.010 - .020]
Finish	1,6 (63)
Involute Profile Variation	+0,000 -0,028 [+.0000 -.0011]
Total Index Variation	0,041 [.0016]
Lead Variation	0,013 [.0005]
Circular Space Width:	
Maximum Actual	4,105 [.1616]
Minimum Effective	3,995 [.1573]
Maximum Effective	Ref. 4,056 [.1597]
Minimum Actual	Ref. 4,018 [.1582]
Dimension Between Two Pins	Ref. 26,929 - 27,084 [1.0602 - 1.0663]
Pin Diameter	Ref. 34,272 - 34,450 [1.3493 - 1.3563]
	Wide Flat for Root Clearance

2 1/4 Inch Straight

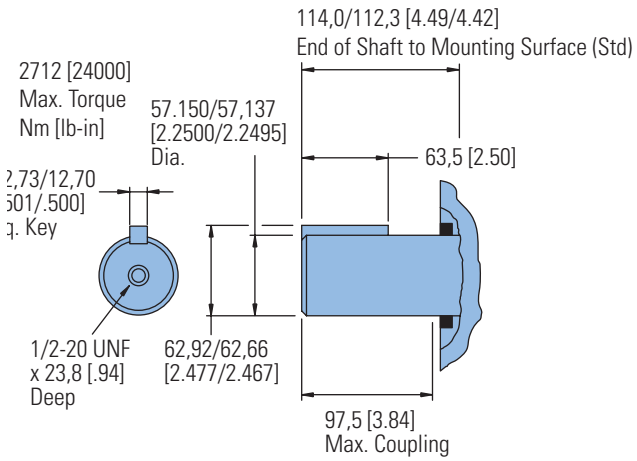

2 1/4 Inch Tapered

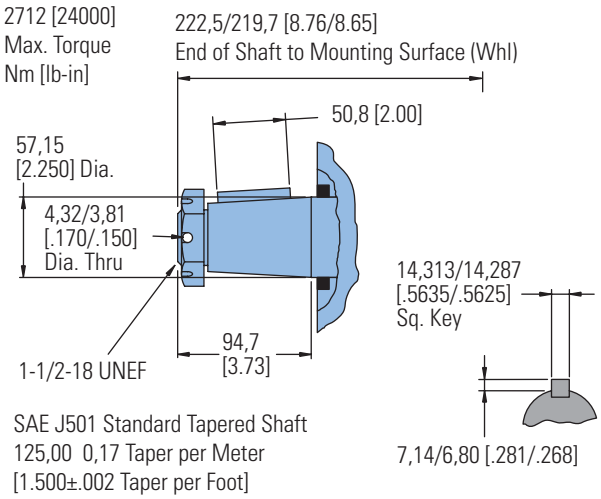

SAE J501 Standard Tapered Shaft
125,00 0,17 Taper per Meter
[1.500±.002 Taper per Foot]

2 1/8 Inch 16 Tooth Splined

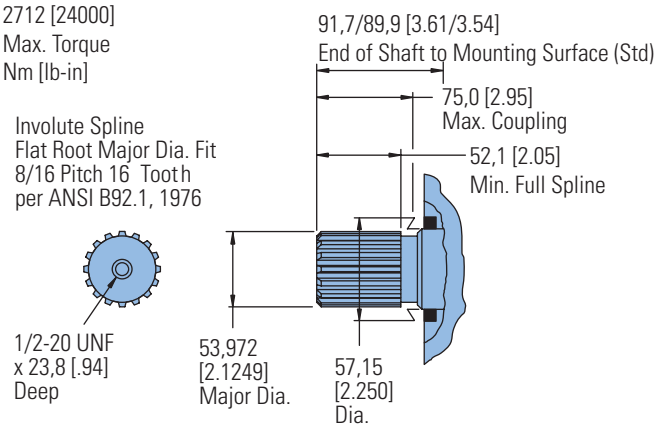

Tapered Shaft Hub Data

Recommended Torque:
(1150 Nm [850 lb-ft] Dry)
(880 Nm [650 lb-ft] Lub)
Plus Torque required to
align the slotted nut with
the Shaft Crosshole.

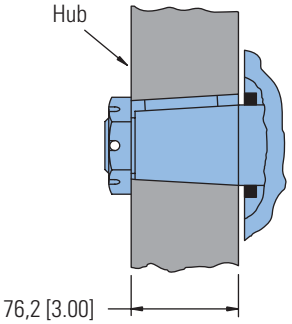

Slotted Hexagon Nut

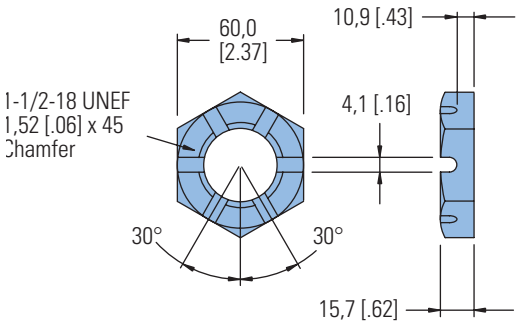

C-6

10,000 Series

Side Shaft Load Capacity

These curves indicate the radial load capacity on the motor shaft at various locations with an external thrust load of 454 kg [1000 lb]. The maximum allowable thrust load is 908 kg [2000 lb].

Note:

Case pressure will increase the allowable inward thrust load and decrease the allowable outward thrust load. Case pressure will push outward on the shaft at 200 kg/7 Bar [441 lb/100 PSI].

Each curve is based on

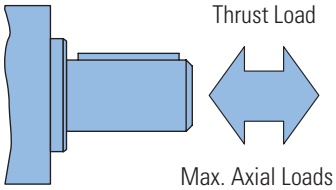

B 10 bearing life (2000 hours of 12,000,000 shaft revolutions at 100 RPM) at rated output torque.
To determine radial load at speeds other than 100 RPM, multiply the load values given on the bearing curve by the factors in the chart below.

RPM	Multiplication Factor
50	1.23
100	1.00
200	0.81
300	0.72
400	0.66
500	0.62
600	0.58
700	0.56
800	0.54

For 3,000,000 shaft revolutions or 500 hours–Increase these shaft loads 52%.

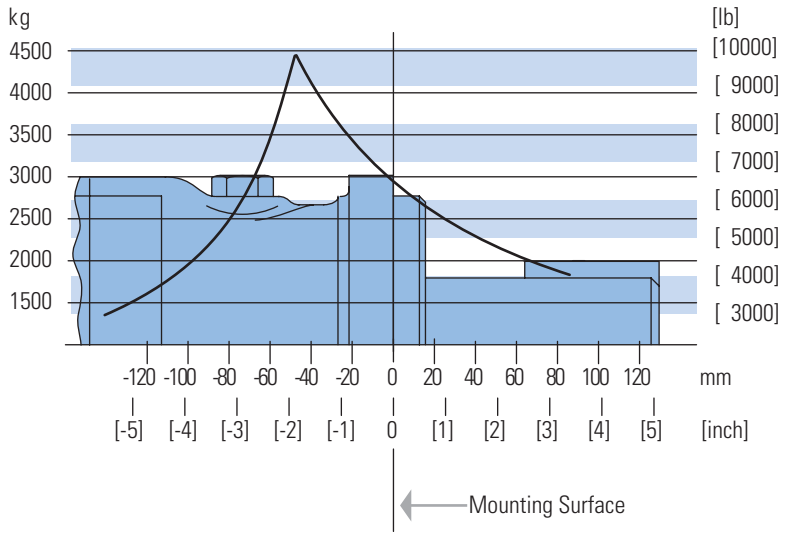

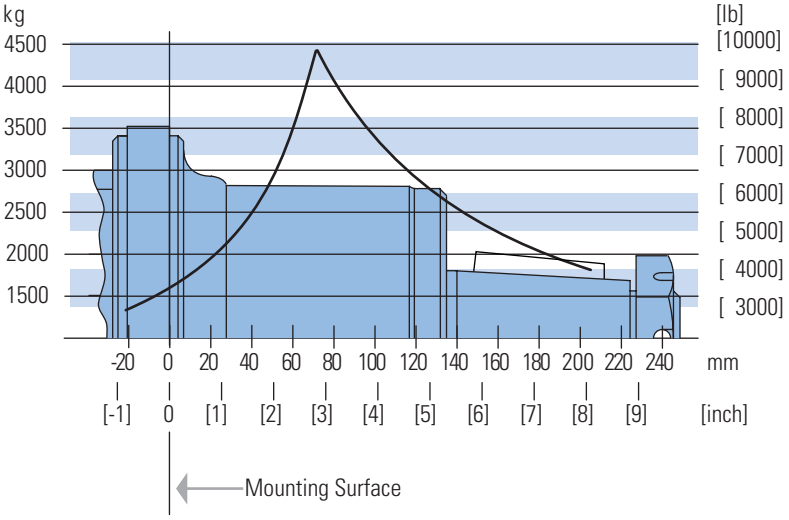

1 1/4 Inch Split Flange Ports (2)

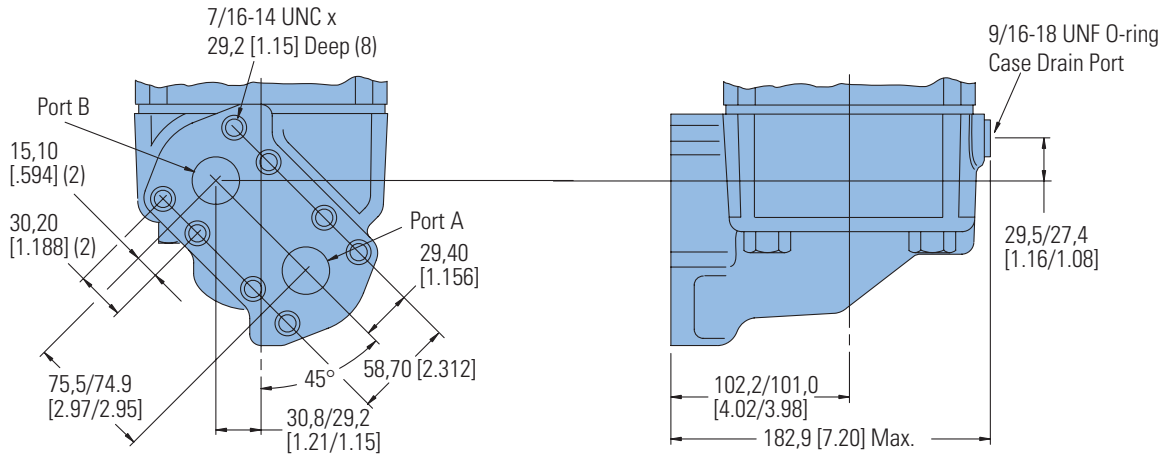

1 5/16 -12 O-ring Ports (2)

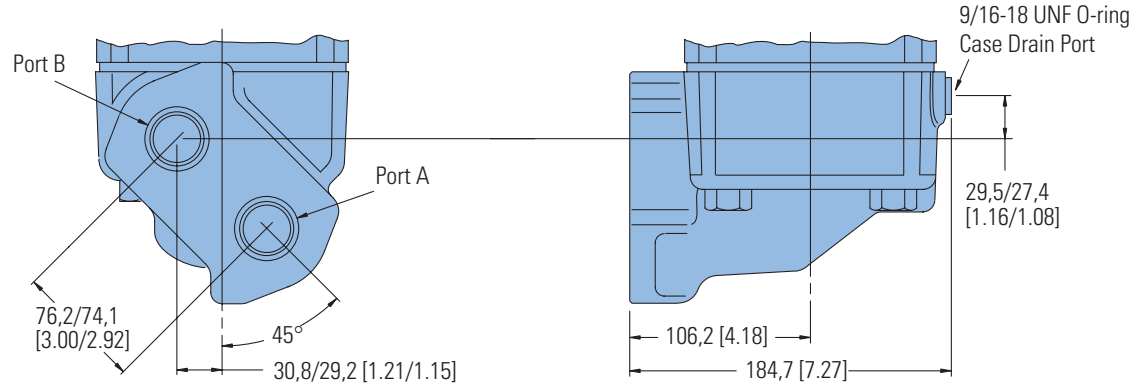

End View
Common Dimensions

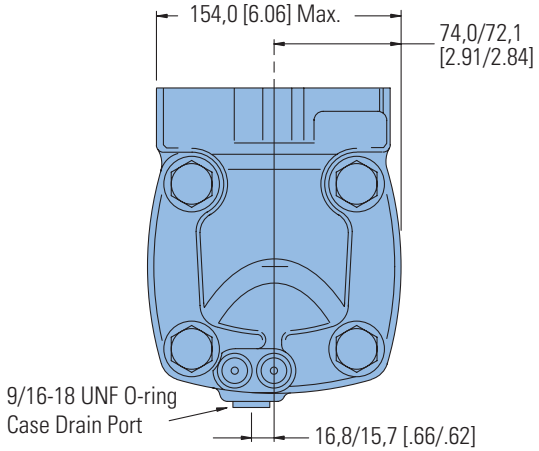

C-6

10,000 Series

Product Numbers

Note:

For 10,000 Series Motors with a configuration **Not Shown** in the chart below: Use model code number system on the next page to specify product in detail.

Use digit prefix — 119-, 120-, or 121 - plus four digit number from charts for complete product number— Example 121-1014.

Orders will not be accepted without three digit prefix.

MOUNTING	SHAFT	PORT SIZE	DISPL. cm^3/r [in^3/r] / PRODUCT NUMBER			
			345 [21.0]	480 [29.3]	665 [40.6]	940 [57.4]
Standard SAE C-Mount	2 1/4 Inch Straight	1 5/16 O-ring	119-1028	-1029	-1030	-1031
		1 1/4 inch Split Flange	119-1040	-1041	-1042	-1043
	2 1/8 Inch 16 T Splined	1 5/16 O-ring	119-1032	-1033	-1034	-1035
		1 1/4 inch Split Flange	119-1044	-1045	-1046	-1047
	2 1/4 Inch Tapered	1 5/16 O-ring	119-1036	-1037	-1038	-1039
		1 1/4 inch Split Flange	119-1048	-1049	-1050	-1051
Wheel Motor	2 1/4 Inch Straight	1 5/16 O-ring	120-1005	-1006	-1007	-1008
		1 1/4 inch Split Flange	120-1017	-1018	-1019	-1020
	2 1/8 Inch 16 T Splined	1 5/16 O-ring	120-1009	-1010	-1011	-1012
		1 1/4 inch Split Flange	120-1021	-1022	-1023	-1024
	2 1/4 Inch Tapered	1 5/16 O-ring	120-1013	-1014	-1015	-1016
		1 1/4 inch Split Flange	120-1025	-1026	-1027	-1028
Bearingless		1 5/16 O-ring	121-1007	-1008	-1009	-1010
		1 1/4 inch Split Flange	121-1011	-1012	-1013	-1014



10,000 Series

Model Code

The following 30-digit coding system has been developed to identify all of the configuration options for the 10,000 Series motor. Use this model code to specify a motor with the desired features. All 30-digits of the code must be present when ordering. You may want to photocopy the matrix below to ensure that each number is entered in the correct box.

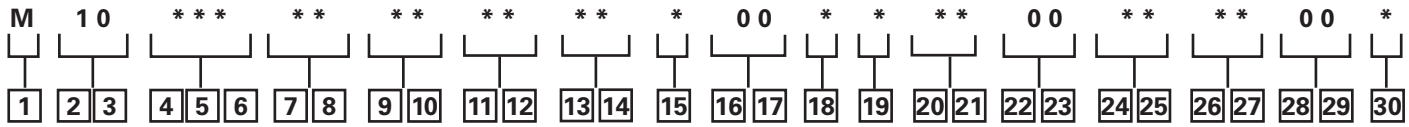

1 Product

M – Motor

2, 3 Series

10 – 10,000 Series

4, 5, 6 Displacement cm^3/r [in^3/r]

210 – 343.8 [20.98]

293 – 479.5 [29.26]

406 – 665.3 [40.60]

574 – 940.8 [57.41]

7, 8 Mounting Description

AA – Standard, 4 Bolt: 127,0 [5.00] Pilot Dia. 16,76 [.660] Dia. Holes on 161,92 [6.375] Dia. Bolt Circle

AB – Wheel, 4 Bolt: 16,76 [.660] Dia. Holes on 209,55 [8.250] Dia. Bolt Circle

AC – Bearingless, 4 Bolt: 152,4 [6.00] Pilot Dia. 20,70 [.815] Holes on 228,60 [9.00] Dia. Bolt Circle

9, 10 Output Shaft Description

00 – None (Bearingless)

01 – 57,15 [2.250] Dia. Straight with .500-20 UNF-2B Thread in End, 12.7 [.50] Square x 63,5 [2.50] Straight End

02 – 57,15 [2.250] Dia. .125:1 Tapered Shaft Per SAE J512 with 1.500-18 UNEF-2A Threaded Shaft End and Slotted Hex Nut, 14,288 [.5625] Square x 50,8 [2.00] Straight Key

03 – 53,98 [2.125] Dia. Flat Root, Major Dia. Fit, 16 Tooth, 8/16 DP, 30 Degree Involute Spline with .500-20 UNF-20 Thread in End. 52,07 [2.050] Minimum Full Spline Length

11, 12 Ports

AA – 1.3125 -12 UN O-Ring Staggered Ports

AB – 31,75 [1.250] Dia. 4 Bolt Split Flange Staggered Ports with .4375-15 UNC-2B Tapped Mounting Holes

13, 14 Case Flow Options

01 – .5625-18 UNF-2B Case Drain SAE O-Ring Port

15 Low Pressure Relief

0 – None

16, 17 Pressure/Flow Option

00 – None

18 Geroler Option

0 – Standard

1 - Free Running

19 Seal Option

00 – Standard Seals

02 – Seal Guard

03 – Viton Seals

04 – Viton Shaft Seal

11 – High pressure shaft seal, slinger seal

19 – Extreme duty seal guard

20, 21 Accessories

00 – None

22, 23 Special Features (Hardware)

00 – None

24, 25 Special Features (Assembly)

00 – None

AA – Reverse Rotation

26, 27 Paint / Packaging

00 – None

AA – Low Gloss Black Primer

28, 29 Customer Identification

00 – None

30 Design Code

C – Third (Standard and Wheel Mounts)

D – Fourth (Bearingless Mount)

Feature in **bold** are preferred and allow for shorter lead time.

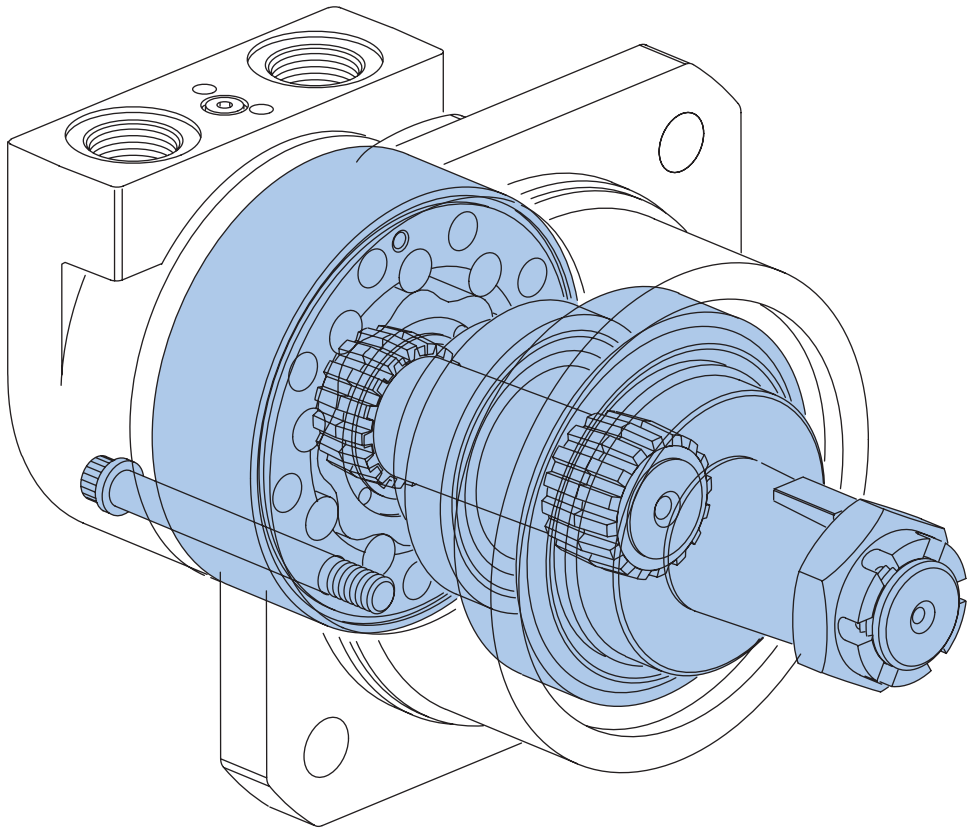

The next step in the evolution of low speed high torque (LSHT) hydraulic motors.

Powering Business Worldwide

VIS Motors

Highlights

Product Description

The VIS (Valve-in-Star) Motors are the next step in the evolution of the low speed high torque (LSHT) hydraulic motors. The VIS design provides design advantages over other types of LSHT hydraulic motor valving resulting in a more compact package with better efficiency and higher pressure capability. These improvements have shown significant packaging and performance advantages in applications such as skid steer loaders, mini excavators, trenchers and logging equipment.

VIS motors are primarily intended for use in closed loop circuit applications. Consult your Eaton representative for assistance on open loop circuit applications.

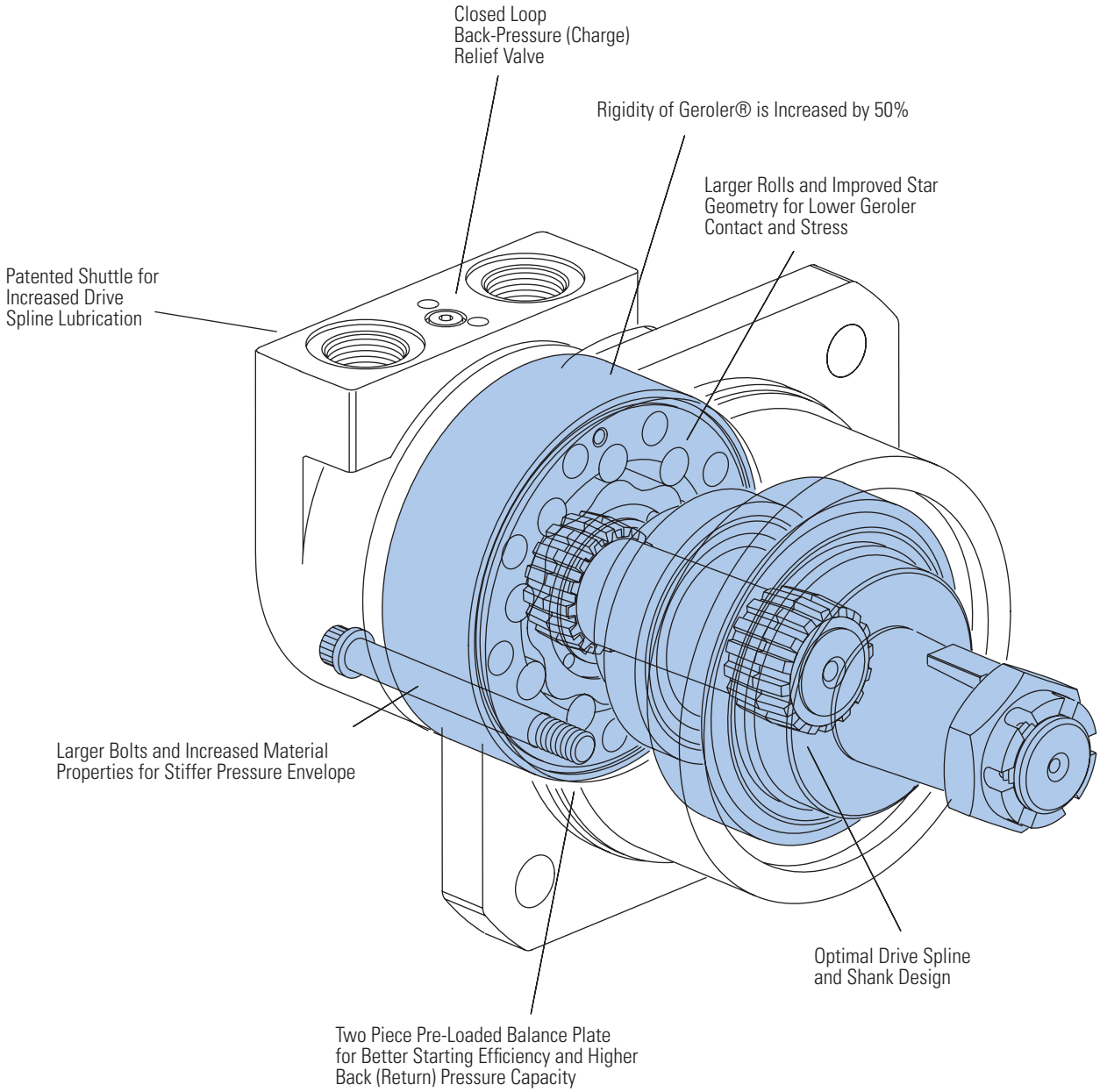

Features, Benefits, and Applications

Features

- Patented VIS Geroler technology
- Simplified design - only three moving components:
  - geroler star
  - drive
  - output shaft
- Pressure-balance Geroler - improves efficiency
- Shuttle valve option for reliable internal drive lubrication
- Variety of optional features

Benefits

- Extremely compact powerful package
- Highest output torque in its class
- High efficiency
- Reduced system temperatures
- High horsepower density
- Design flexibility
- Reliable and dependable performance

Applications

- Skid steer loaders
- Sprayers
- Underground boring equipment
- Forestry equipment
- Irrigation reels
- Grinders/Mixers
- Material handling equipment
- Augers and skid steer attachments
- Large turf care equipment

Design Features

Eaton hydraulic motors provide design flexibility. All VIS motors are available with various configurations consisting of:

- Displacement (Geroler)
- Output Shaft
- No Shaft (Bearingless Motor)
- Port Configuration
- Mounting Flange
- Park brake
- Other Special Features

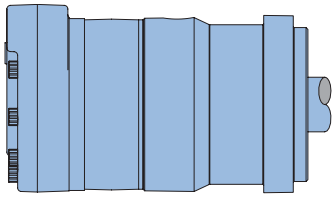

Standard Motor

The standard motor mounting flange is located as close to the output shaft as possible. This type of mounting supports the motor close to the shaft load. This mounting flange is also compatible with many standard gear boxes.

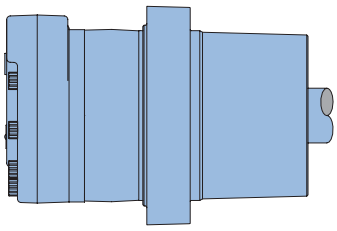

Wheel Motor

The wheel motor mounting flange is located near the center of the motor which permits part or all of the motor to be located inside the wheel or roller hub. In traction drive applications, loads can be positioned over the motor bearings for best bearing life. This wheel motor mounting flange provides design flexibility in many applications.

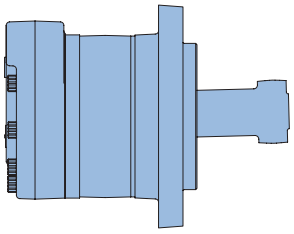

Bearingless Motor

The bearingless motor has the same drive components as the standard and wheel motors with the exception that the motor is assembled without the output shaft, bearings and bearing housing. The bearingless motor is especially suited for applications such as gear boxes, winch drives, reel and roll drives. Bearingless motor applications must be designed with a bearing supported internal spline to mate with the bearingless motor drive. Product designs using these hydraulic motors provide considerable cost savings.

Table of Contents

Highlights	D-ii
Features, Benefits, and Applications	D-iii
Table of Contents	D-iv
Typical Hydraulic Circuit	D-v

VIS 40 Series

Highlights	D-2-1
Specifications	D-2-2
Performance Data	D-2-3
Dimensions	D-2-6
Installation Information	D-2-10
Dimensions Shafts	D-2-11
Side Load Capacity	D-2-12
Oversize Flange 224,0 [8.82] B.C.	D-2-14
Product Numbers	D-2-17
Model Code	D-2-19
VIS 40 Series Two-speed	
Specifications	D-2-20
Performance Data	D-2-20
Dimensions	D-2-21
Installation Information	D-2-25
Product Numbers	D-2-26
Model Code	D-2-27
Brake Description	D-2-28
Brake Shaft Dimensions/ Sideload Curves	D-2-30

VIS 45 Series

Highlights	D-3-1
Specifications	D-3-2
Performance Data	D-3-3
Dimensions	D-3-6
Installation Information	D-3-9
Dimensions Shafts	D-3-10
Side Load Capacity	D-3-12
Product Numbers	D-3-13
Model Code	D-3-15
VIS 45 Series Two-speed	
Specifications	D-3-16
Performance Data	D-3-16
Dimensions	D-3-17
Product Numbers	D-3-20
Model Code	D-3-21

Typical Hydraulic Circuit

VIS 40 and 45 Series

Shuttle Valve, Two Way (Closed Center) —
Schematic Diagrams

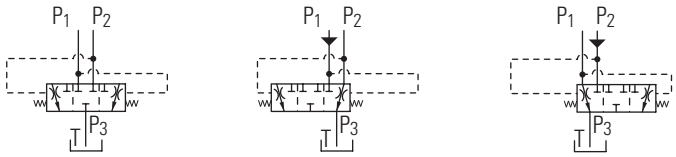

Closed Loop Circuit

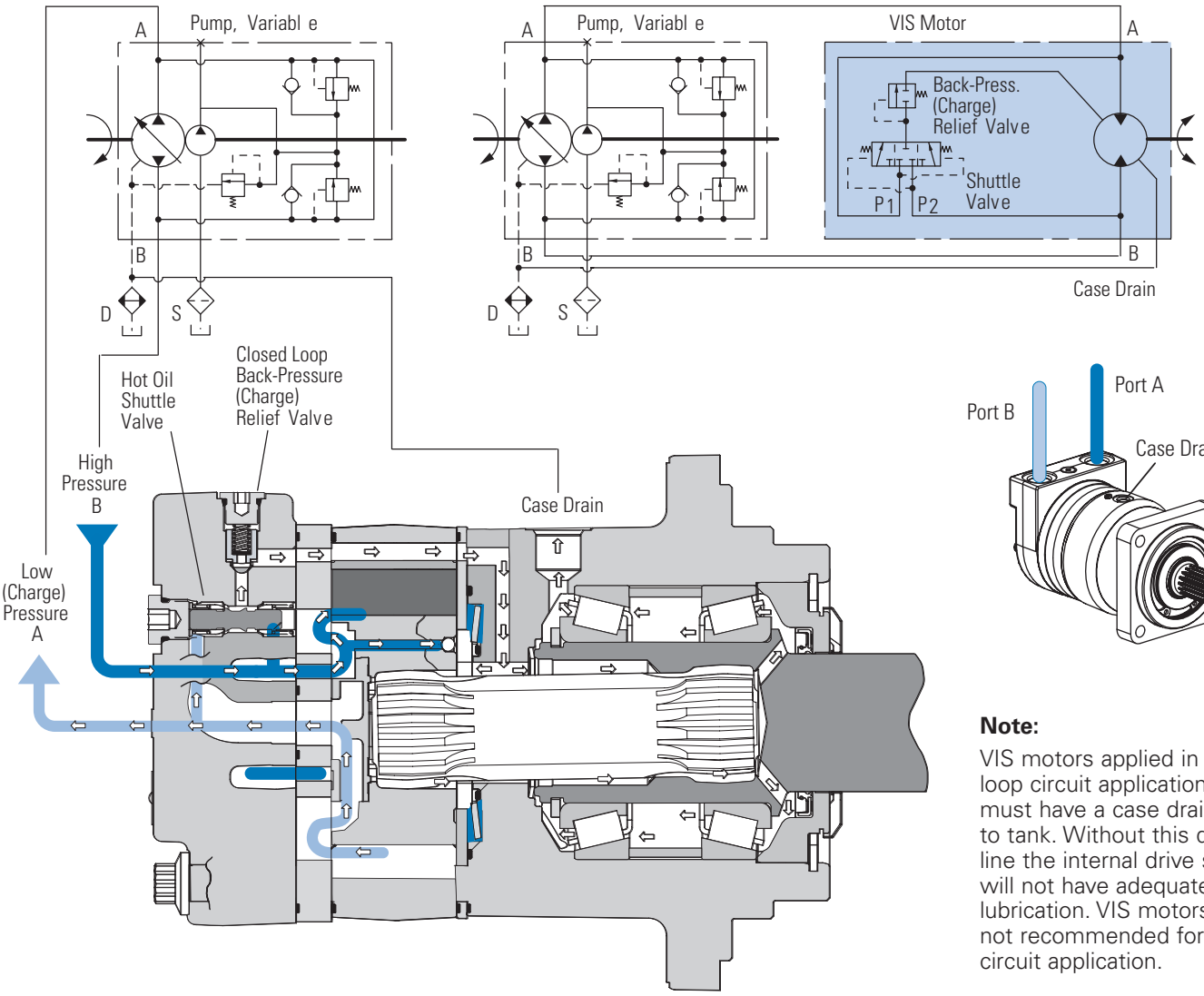

Note:

VIS motors applied in closed loop circuit applications must have a case drain line to tank. Without this drain line the internal drive spline will not have adequate lubrication. VIS motors are not recommended for series circuit application.

VIS 40 and 45 Motors Shuttle Flow Charts

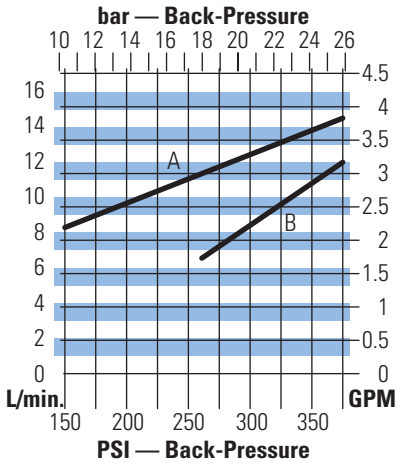

A

4,5 bar [65 PSI] @ 60° C [140° F]

Δ Between Back-Pressure and Case Pressure (Typical Data)

B

15,2 bar [220 PSI] @ 60° C [140° F]

Δ Between Back-Pressure and Case Pressure (Typical Data)

Due to Machining Tolerances, Flow May be More or Less

Typical Hydraulic Circuit

VIS 40 and
45 Series

Open Loop Circuit

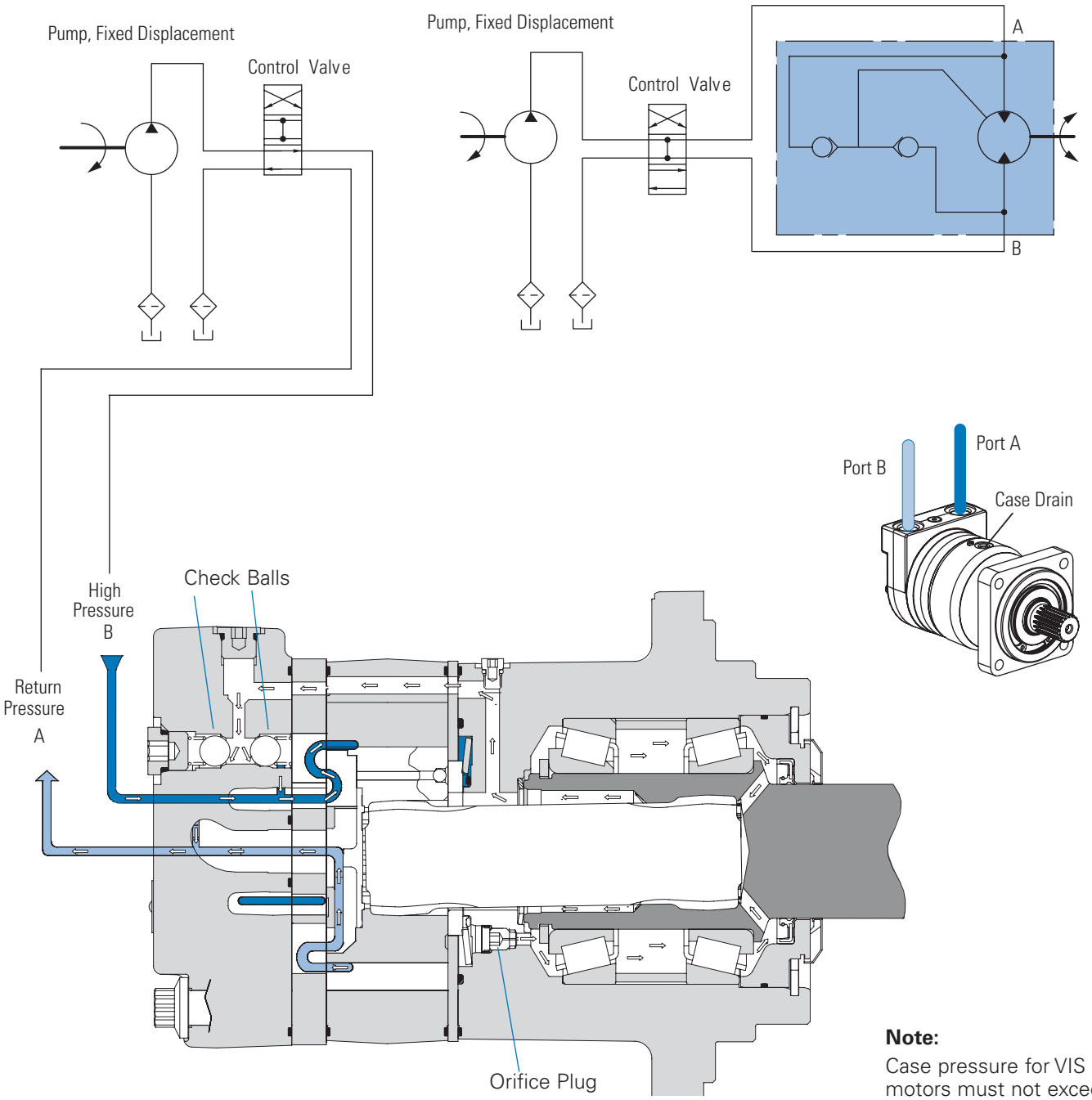

Note:

Case pressure for VIS motors must not exceed 50 psi. With an "Open Loop Option" VIS motor, a case drain is not required, except if the return pressure is greater than 50 psi.

Typical Hydraulic Circuit

VIS 40 and

45 Series

Two-speed Circuit

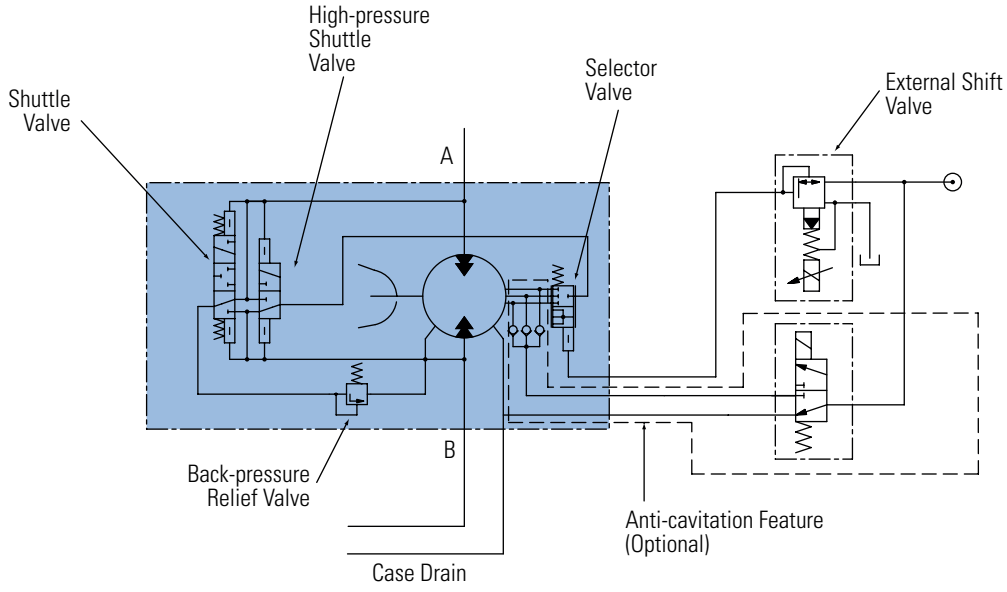

Two-Speed Brake Motor Circuit

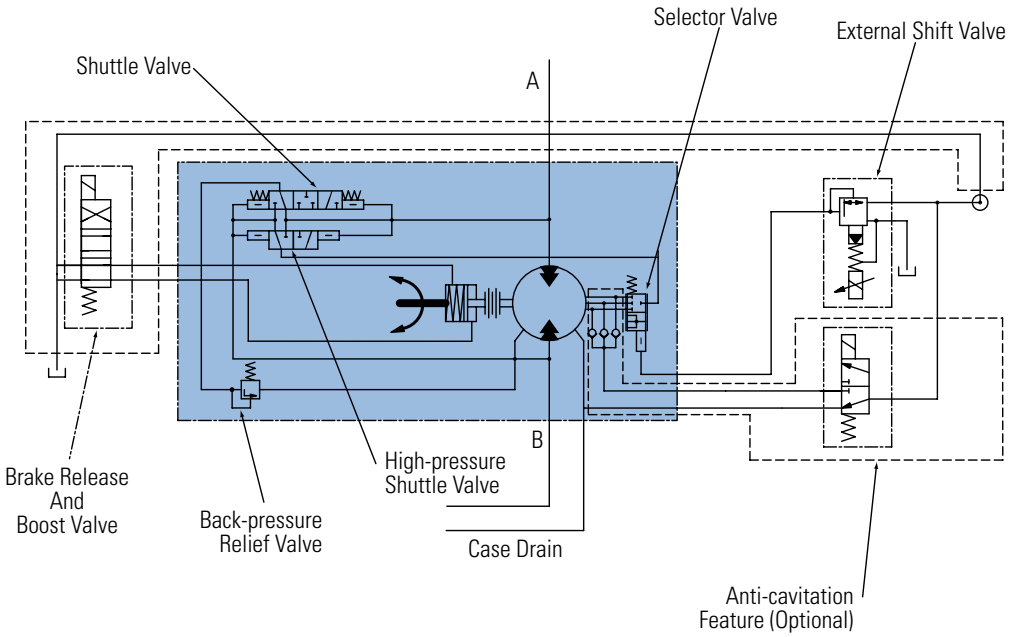

D-1

D-2

Notes

VIS 40 Series

Highlights

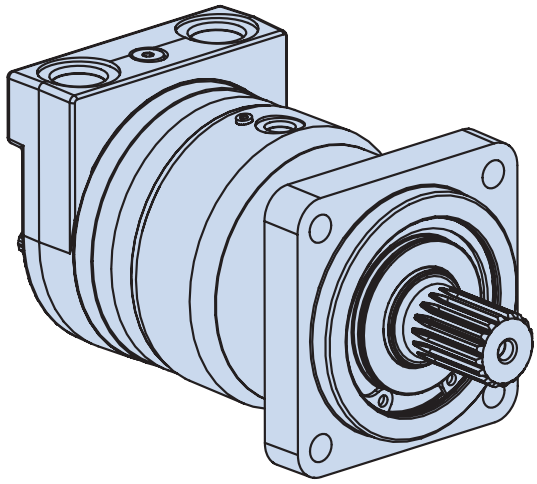

Description

The VIS 40 Series is the newest addition to the VIS product line. The VIS 40 is very close in size to the VIS 30, but with increased drive train strength, it has even greater torque capability. Maximum continuous output torque capability is rated to 2531 Nm [22,400 lb-in] with a displacement range from 505cc to 940cc per revolution. VIS 40 motors can be run up to 151 LPM [40 GPM] with pressure capability up to 310 bar (4500 PSI]. The motor utilizes patented VIS technology with improved high-strength Geroler, optimized drive geometry, and two-piece pre-loaded balance plate for increased starting efficiency, reduced leakage and higher back pressure capacity. A wide variety of options are available including two-speed option, brake options and case flow options for both closed-loop and open loop applications.

Specifications

Geroler Element	8 Displacements
Flow l/min [GPM]	151 [40] Continuous
	170 [45] Intermittent
Speed	Up to 454 RPM
Pressure bar [PSI]	310 [4500] Cont.
	345 [5000] Inter.
	380 [5500] Peak.
Torque Nm [lb - in]	2531 [22400] Cont.
	3165 [28000] Inter.

Features

- Patented VIS Geroler technology
- Three moving components: (Geroler, star, drive, and output shaft)
- Maximized drive strength in compact package size
- Compact package size similar to VIS 30 Seriies.
- Two-piece pre-loaded pressure balance plate
- Variety of optional features including two-speed option, brake packages, and case flow solutions for both closed-loop and open-loop applications.

Benefits

- Extremely compact powerful package
- Increased torque capability
- Greatest horsepower density in the VIS motor line
- High efficiency
- Quiet, smooth operation
- Reliable, trouble-free performance
- Design Flexibility

Applications

- Skid Steer Loaders and Attachments
- Snow Removal Equipment
- Trenchers
- Grapples
- Rough Terrain Forklifts
- Wood Processing – Saw Mills & Chippers
- Metal Forming
- Entertainment / Amusement Rides
- Industrial Processing
- Harvesters



Skid Steer



Trencher



Digger



Port Equipment

VIS 40 Series

Specifications

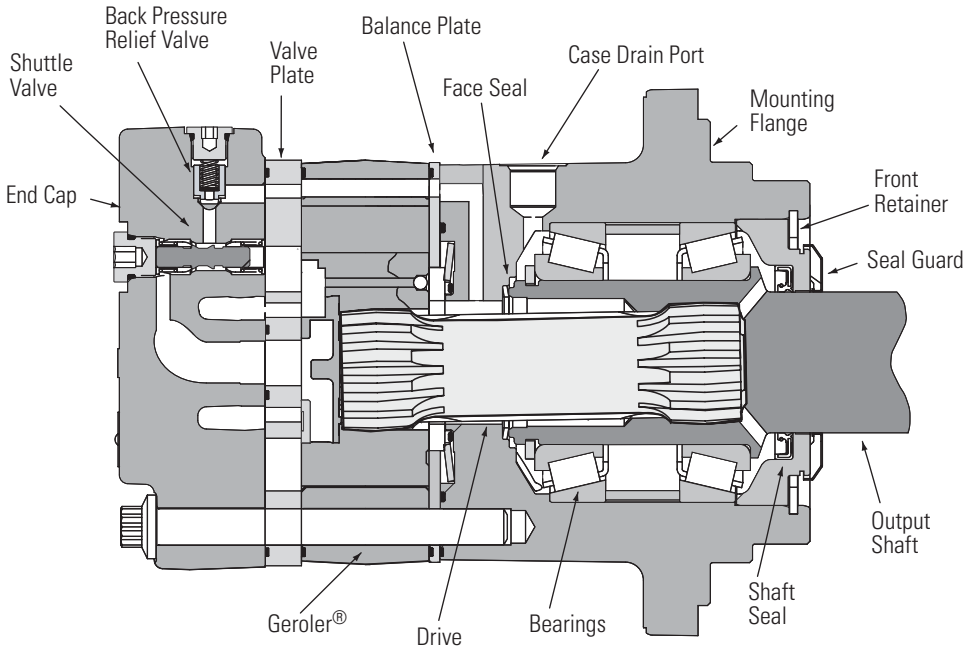

SPECIFICATION DATA — VIS 40 MOTORS

Displ. cm³/r [in³/r]		325 [19.8]	400 [24.4]	505 [30.7]	570 [34.9]	630 [38.5]	685 [41.7]	785 [48.0]	940 [57.4]
Max. Speed (RPM) @ Flow	Continuous	440	357	279	244	221	204	177	148
	Intermittent	454	368	293	257	233	215	187	148
Flow l/min [GPM]	Continuous	151 [40]	151 [40]	151 [40]	151 [40]	151 [40]	151 [40]	151 [40]	151 [40]
	Intermittent	170 [45]	170 [45]	170 [45]	170 [45]	170 [45]	170 [45]	170 [45]	170 [45]
Torque Nm [lb - in]	Continuous	1445 [12789]	1781 [15760]	2240 [19829]	2531 [22400]	2531 [22400]	2531 [22400]	2531 [22400]	2531 [22400]
	Intermittent	1986 [17421]	1597 [14137]	2746 [21919]	2815 [24918]	3165 [28000]	3165 [28000]	3165 [28000]	3165 [28000]
Pressure Δ bar [Δ PSI]	Continuous	310 [4500]	310 [4500]	310 [4500]	279 [4040]	254 [3686]	235 [3389]	208 [3012]	171 [2489]
	Intermittent	345 [5000]	345 [5000]	345 [5000]	309 [4486]	315 [4574]	290 [4212]	254 [3682]	214 [3100]
	Peak	380 [5500]	380 [5500]	380 [5500]	380 [5500]	380 [5500]	380 [5500]	300 [4355]	250 [3621]
Weight kg [lb]	Standard or Wheel Mount	28,5 [62.9]	29,1 [64.2]	29,9 [66.0]	30,5 [67.2]	31,4 [68.2]	31,4 [69.2]	32,2 [71.0]	33,4 [73.6]
	Bearingless	16,3 [36.0]	16,9 [37.3]	17,7 [39.1]	18,3 [40.3]	18,7 [41.3]	19,2 [42.3]	20,0 [44.1]	21,2 [46.7]
Weight kg [lb]	Two-speed Standard or Wheel Mount	32,1 [70.8]	32,7 [72.1]	33,5 [73.9]	34,1 [75.1]	34,5 [76.1]	35,0 [77.1]	35,8 [78.9]	37,0 [81.5]
	Two-speed Bearingless	19,9 [43.9]	20,5 [45.2]	21,3 [47.0]	21,9 [48.2]	22,3 [49.2]	22,8 [50.2]	23,6 [52]	24,8 [54.6]

A simultaneous maximum torque and maximum speed NOT recommended.

Note:

To assure best motor life, run motor for approximately one hour at 30% of rated pressure before application to full load. Be sure motor is filled with fluid prior to any load applications.

Maximum Inlet Pressure:

400 bar [5800 PSI]

Do Not Exceed A Pressure Rating (for displacement size see chart above).

Return Pressure (Back-Pressure):

Minimum – 3,5 bar [50 PSI]

Maximum – 21 bar [300 PSI]

Note:

Return (back-pressure) must be 3,5 bar [50 PSI] greater than the case pressure, except with open loop circuit.

Δ Pressure:

The true Δ bar [ΔPSI] between inlet port and outlet port

Case Pressure:

Minimum – No Pressure

Maximum – 3,5 bar [50 PSI]

Note:

The case must be full when the motor is operating. A case drain is recommended.

Continuous Rating:

Motor may be run continuously at these ratings

Intermittent Operation:

10% of every minute

Peak Operation:

1% of every minute

Recommended Fluids:

Premium quality, anti-wear type hydraulic oil with a viscosity of not less than 70 SUS at operating temperature.

Recommended System Operating Temp.:

-34°C to 82°C [-30°F to 180°F]

Recommended Filtration:

Per ISO Cleanliness Code, 4406: 20/18/13

Shuttle:

Standard

Back-Pressure Relief Valve:

Required for closed loop circuit.

VIS 40 Series

Performance Data

Motors run with high efficiency in all areas designated with a number for torque and speed. For best motor life select a motor to run with a torque and speed range shown in the light shaded area.

Performance data is typical at 120 SUS. Actual data may vary slightly from unit to unit in production.

Continuous

Intermittent

Will Operate at Reduced Life

325 cm³/r [19.8 in³/r]

Δ Pressure Bar [PSI]

Flow LPM [GPM]

	250	500	1000	1500	2000	2500	3000	3500	4000	4500	5000	5500
	15	35	70	105	140	170	205	240	275	310	345	380
4	668	1399	2834	4251	5583	6924	8258	9528	10387	11637	12659	
	75	158	320	480	631	782	933	1076	1174	1315	1430	
15	46	46	46	44	43	43	42	42	39	37	36	
8	680	1419	2867	4303	5711	7126	8530	9876	11269	12460	13782	14840
	77	160	324	486	645	805	964	1116	1273	1408	1557	1677
30	93	91	90	87	85	84	83	81	78	74	70	66
12	647	1412	2879	4340	5768	7195	8619	10010	11360	12672	14029	15246
	73	160	325	490	652	813	974	1131	1284	1432	1585	1723
45	139	137	133	132	129	129	129	127	126	124	113	109
16	690	1420	2852	4316	5741	7191	8621	10014	11412	12736	14081	15435
	78	160	322	488	649	812	974	1131	1289	1439	1591	1744
61	186	184	181	179	174	170	168	168	166	161	154	151
20	657	1250	2774	4407	5695	7170	8741	9952	11392	12789	14137	15339
	74	141	313	498	643	810	988	1124	1287	1445	1597	1733
76	233	229	226	223	217	214	211	209	208	203	200	197
25	544	1266	2814	4154	5858	7220	8518	9936	11269	12654	14037	15334
	61	143	318	469	662	816	962	1123	1273	1430	1586	1732
95	291	287	283	280	277	269	266	264	260	256	254	248
30	146	1177	2605	3968	5401	6882	8315	9678	11092	12536	13960	15321
	16	133	294	448	610	778	939	1094	1253	1416	1577	1731
114	341	345	340	336	333	325	323	320	316	312	307	303
35	114	1144	2532	3960	5322	6768	8232	9589	11019	12228	13298	15023
	13	129	286	447	601	765	930	1083	1245	1382	1503	1697
132	396	402	396	392	387	378	377	372	369	363	353	354
40	92	557	2047	3574	5032	6507	7944	9282	10687	12112	13439	14938
	10	63	231	404	569	735	898	1049	1207	1368	1518	1688
151	454	452	440	433	430	429	430	428	425	420	413	408

400 cm³/r [24.4 in³/r]

Δ Pressure Bar [PSI]

Flow LPM [GPM]

	250	500	1000	1500	2000	2500	3000	3500	4000	4500	5000	5500
	15	35	70	105	140	170	205	240	275	310	345	380
4	823	1724	3493	5239	6880	8532	10177	11741	12800	14340	15600	
	93	195	395	592	777	964	1150	1327	1446	1620	1763	
15	37	37	37	36	35	35	34	34	32	30	29	
8	838	1749	3533	5302	7038	8781	10511	12171	13887	15354	16983	18288
	95	198	399	599	795	992	1188	1375	1569	1735	1919	2066
30	75	74	73	71	69	68	67	66	63	60	57	53
12	797	1740	3548	5349	7108	8866	10622	12335	13999	15616	17289	18788
	90	197	401	604	803	1002	1200	1394	1582	1764	1953	2123
45	113	111	108	107	105	105	105	103	102	101	92	88
16	850	1750	3515	5319	7074	8862	10624	12341	14063	15695	17353	19021
	96	198	397	601	799	1001	1200	1394	1589	1773	1961	2149
61	151	149	147	145	141	138	136	136	135	131	125	123
20	810	1540	3419	5431	7018	8836	10771	12264	14039	15760	17421	18902
	92	174	386	614	793	998	1217	1386	1586	1781	1968	2136
76	189	186	183	181	176	174	171	170	169	165	163	160
25	670	1560	3467	5118	7219	8897	10497	12244	13887	15594	17299	18896
	76	176	392	578	816	1005	1186	1383	1569	1762	1954	2135
95	236	233	230	227	225	218	216	215	211	208	206	202
30	180	1450	3210	4890	6656	8480	10246	11927	13669	15448	17203	18881
	20	164	363	552	752	958	1158	1348	1544	1745	1944	2133
114	277	280	276	273	270	264	262	259	256	253	250	246
35	140	1410	3120	4880	6559	8341	10144	11817	13579	15068	16388	18514
	16	159	353	551	741	942	1146	1335	1534	1702	1852	2092
132	321	326	321	318	314	307	306	302	299	295	287	287
40	113	687	2522	4405	6201	8019	9789	11438	13170	14926	16561	18409
	13	78	285	498	701	906	1106	1292	1488	1686	1871	2080
151	368	367	357	352	349	348	349	347	345	341	335	331

6201 } Torque [lb-in]
701 } Nm
349 Speed RPM

D-1

VIS 40 Series

Performance Data

Motors run with high efficiency in all areas designated with a number for torque and speed. For best motor life select a motor to run with a torque and speed range shown in the light shaded area.

Performance data is typical at 120 SUS. Actual data may vary slightly from unit to unit in production.

Continuous

Intermittent

Will Operate at Reduced Life

505 cm³/r [30.7 in³/r]

Δ Pressure Bar [PSI]

Flow LPM [GPM]	250 15	500 35	1000 70	1500 105	2000 140	2500 170	3000 205	3500 240	4000 275	4500 310	5000 345	5500 380
4	1035	2169	4395	6592	8656	10735	12804	14773	16105	18043	19628	
	117	245	497	745	978	1213	1447	1669	1820	2039	2218	
15	29	29	29	29	28	28	27	27	25	24	23	
8	1055	2200	4445	6671	8855	11049	13225	15313	17473	19319	21368	23010
	119	249	502	754	1000	1248	1494	1730	1974	2183	2414	2600
30	60	59	58	56	55	54	53	52	50	48	45	42
12	1003	2190	4464	6730	8944	11155	13364	15520	17614	19648	21753	23640
	113	247	504	760	1011	1260	1510	1754	1990	2220	2458	2671
45	90	88	86	85	83	83	83	82	81	80	73	70
16	1069	2202	4422	6692	8901	11150	13367	15527	17694	19747	21833	23932
	121	249	500	756	1006	1260	1510	1754	1999	2231	2467	2704
61	120	118	117	115	112	110	108	108	107	104	100	98
20	1019	1938	4301	6833	8830	11117	13552	15431	17663	19829	21919	23783
	115	219	486	772	998	1256	1531	1743	1996	2240	2476	2687
76	150	148	145	144	140	138	136	135	134	131	129	127
25	843	1963	4363	6440	9083	11194	13207	15406	17473	19620	21765	23775
	95	222	493	728	1026	1265	1492	1741	1974	2217	2459	2686
95	188	185	183	180	179	173	172	171	168	165	164	160
30	226	1824	4039	6153	8375	10670	12892	15006	17199	19437	21645	23756
	26	206	456	695	946	1206	1457	1695	1943	2196	2446	2684
114	220	223	219	217	215	210	208	206	204	201	198	195
35	176	1774	3926	6140	8252	10494	12763	14868	17086	18959	20619	23294
	20	200	444	694	932	1186	1442	1680	1930	2142	2330	2632
132	255	259	255	253	250	244	243	240	238	234	228	228
40	142	864	3174	5542	7803	10089	12317	14391	16570	18779	20837	23162
	16	98	359	626	882	1140	1392	1626	1872	2122	2354	2617
151	293	292	284	279	277	277	277	276	274	271	267	263

570cm³/r [34.9 in³/r]

Δ Pressure Bar [PSI]

Flow LPM [GPM]	250 15	500 35	1000 70	1500 105	2000 140	2500 170	3000 205	3500 240	4000 275	4500 310	5000 345	5500 380
4	1177	2466	4996	7494	9841	12204	14556	16794	18308	20511	22313	
	133	279	564	847	1112	1379	1645	1897	2069	2317	2521	
15	26	26	26	25	24	24	24	24	22	21	20	
8	1199	2501	5053	7584	10067	12560	15034	17408	19864	21962	24292	26158
	135	283	571	857	1137	1419	1699	1967	2244	2481	2745	2955
30	52	52	51	50	48	48	47	46	44	42	40	37
12	1140	2489	5074	7650	10167	12681	15193	17644	20024	22336	24729	26874
	129	281	573	864	1149	1433	1717	1993	2262	2524	2794	3036
45	79	78	76	75	73	73	73	72	71	71	64	62
16	1216	2503	5027	7608	10119	12675	15195	17652	20115	22449	24820	27206
	137	283	568	860	1143	1432	1717	1994	2273	2536	2804	3074
61	106	104	103	101	99	96	95	95	94	92	88	86
20	1159	2203	4890	7768	10038	12638	15407	17542	20080	22542	24918	27037
	131	249	552	878	1134	1428	1741	1982	2269	2547	2815	3055
76	132	130	128	127	123	121	120	119	118	115	114	112
25	958	2231	4960	7321	10325	12725	15014	17513	19863	22305	24743	27027
	108	252	560	827	1167	1438	1696	1979	2244	2520	2796	3054
95	165	163	161	159	157	152	151	150	148	145	144	141
30	257	2074	4591	6994	9520	12130	14656	17059	19552	22096	24606	27006
	29	234	519	790	1076	1370	1656	1927	2209	2496	2780	3051
114	193	196	193	191	189	184	183	181	179	177	174	172
35	200	2017	4463	6980	9381	11930	14509	16902	19423	21553	23440	26481
	23	228	504	789	1060	1348	1639	1910	2195	2435	2648	2992
132	225	228	224	222	220	214	214	211	209	206	201	201
40	162	983	3608	6300	8870	11469	14002	16360	18837	21348	23688	2633
	18	111	408	712	1002	1296	1582	1848	2128	2412	2676	2975
151	257	257	249	246	244	243	244	243	241	238	234	232

8870 } Torque [lb-in]
1002 } Nm
244 Speed RPM

VIS 40 Series

Performance Data

Motors run with high efficiency in all areas designated with a number for torque and speed. For best motor life select a motor to run with a torque and speed range shown in the light shaded area.

Performance data is typical at 120 SUS. Actual data may vary slightly from unit to unit in production.

Continuous

Intermittent

Will Operate at Reduced Life

630 cm³/r [38.5 in³/r]

Δ Pressure Bar [PSI]

Flow LPM [GPM]	250 15	500 35	1000 70	1500 105	2000 140	2500 170	3000 205	3500 240	4000 275	4500 310	5000 345	5500 380
4	1298	2720	5511	8267	10856	13463	16058	18526	20197	22627	24615	
	147	307	623	934	1227	1521	1814	2093	2282	2556	2781	
15	23	23	23	23	22	22	22	22	20	19	18	
8	1323	2759	5575	8366	11105	13856	16585	19204	21913	24227	26797	28856
	149	312	630	945	1255	1565	1874	2170	2476	2737	3028	3260
30	48	47	46	45	44	43	42	42	40	38	36	34
12	1257	2746	5598	8439	11216	13990	16760	19464	22089	24640	27279	29646
	142	310	632	954	1267	1581	1894	2199	2496	2784	3082	3350
45	72	70	68	68	67	67	67	65	65	64	58	56
16	1341	2761	5546	8393	11163	13982	16763	19472	22190	24765	27381	30012
	152	312	627	948	1261	1580	1894	2200	2507	2798	3094	3391
61	96	94	93	92	89	87	86	86	86	83	79	78
20	1278	2430	5394	8569	11073	13942	16996	19352	22151	24867	27488	29825
	144	275	609	968	1251	1575	1920	2186	2503	2810	3106	3370
76	120	118	116	115	112	110	108	108	107	104	103	102
25	1057	2461	5471	8076	11390	14038	16563	19320	21912	24605	27295	29815
	119	278	618	912	1287	1586	1871	2183	2476	2780	3084	3369
95	150	148	146	144	143	138	137	136	134	132	130	128
30	283	2288	5065	7716	10502	13381	16167	18819	21569	24375	27145	29792
	32	258	572	872	1187	1512	1827	2126	2437	2754	3067	3366
114	175	177	175	173	171	167	166	164	163	160	158	156
35	221	2225	4923	7700	10349	13160	16006	18646	21427	23776	25858	29212
	25	251	556	870	1169	1487	1808	2107	2421	2686	2922	3301
132	204	207	203	202	199	194	194	191	190	187	182	182
40	178	1084	3980	6950	9785	12652	15446	18048	20780	23551	26132	29047
	20	122	450	785	1106	1430	1745	2039	2348	2661	2952	3282
151	233	233	226	223	221	221	221	220	219	216	213	210

685 cm³/r [41.7 in³/r]

Δ Pressure Bar [PSI]

Flow LPM [GPM]	250 15	500 35	1000 70	1500 105	2000 140	2500 170	3000 205	3500 240	4000 275	4500 310	5000 345	5500 380
4	1406	2947	5969	8954	11758	14582	17392	20066	21875	24507	26661	
	159	333	674	1012	1328	1647	1965	2267	2472	2769	3012	
15	22	22	22	21	20	20	20	20	19	18	17	
8	1433	2989	6038	9062	12028	15007	17964	20800	23734	26241	29025	31254
	162	338	682	1024	1359	1696	2030	2350	2682	2965	3279	3531
30	44	43	43	42	40	40	39	39	37	35	33	31
12	1362	2974	6063	9141	12148	15152	18153	21082	23925	26688	29547	32110
	154	336	685	1033	1373	1712	2051	2382	2703	3015	3338	3628
45	66	65	63	63	61	61	61	60	60	59	54	52
16	1453	2991	6007	9090	12090	15145	18156	21091	24034	26823	29656	32506
	164	338	679	1027	1366	1711	2051	2383	2715	3031	3351	3673
61	88	87	86	85	83	81	80	80	79	77	73	72
20	1384	2632	5842	9281	11994	15100	18408	20960	23992	26934	29773	32304
	156	297	660	1049	1355	1706	2080	2368	2711	3043	3364	3650
76	111	109	107	106	103	102	100	99	99	96	95	94
25	1145	2666	5926	8748	12337	15205	17939	20926	23733	26650	29563	32293
	129	301	670	988	1394	1718	2027	2364	2681	3011	3340	3649
95	138	136	135	133	132	128	126	126	124	122	120	118
30	307	2478	5486	8357	11375	14493	17511	20383	23361	26401	29401	32268
	35	280	620	944	1285	1637	1978	2303	2639	2983	3322	3646
114	162	164	161	160	158	154	153	152	150	148	146	144
35	239	2410	5332	8340	11209	14254	17337	20196	23207	25752	28007	31640
	27	272	602	942	1266	1610	1959	2282	2622	2910	3164	3575
132	188	191	188	186	184	179	179	177	175	172	168	168
40	193	1174	4311	7527	10598	13704	16730	19548	22507	25508	28304	31461
	22	133	487	850	1197	1548	1890	2209	2543	2882	3198	3555
151	215	215	209	206	204	204	204	203	202	199	196	194

10598 Torque [lb-in]
1197 Nm
204 Speed RPM

D-2

VIS 40 Series

Performance Data

Motors run with high efficiency in all areas designated with a number for torque and speed. For best motor life select a motor to run with a torque and speed range shown in the light shaded area.

Performance data is typical at 120 SUS. Actual data may vary slightly from unit to unit in production.

Continuous

Intermittent

Will Operate at Reduced Life

785 cm³/r [48.0 in³/r]

Δ Pressure Bar [PSI]

Flow LPM [GPM]	250	500	1000	1500	2000	2500	3000	3500	4000	4500	5000
	15	35	70	105	140	170	205	240	275	310	345
4	1618	3392	6871	10306	13535	16784	20020	23097	25180	28210	30689
	183	383	776	1164	1529	1896	2262	2610	2845	3187	3467
15	19	19	19	18	18	18	17	17	16	15	15
8	1649	3440	6950	10431	13845	17275	20678	23942	27320	30205	33410
	186	389	785	1178	1564	1952	2336	2705	3087	3413	3775
30	38	38	37	36	35	35	34	34	32	31	29
12	1568	3423	6979	10522	13984	17441	20895	24267	27540	30720	34011
	177	387	789	1189	1580	1971	2361	2742	3112	3471	3843
45	57	56	55	54	53	53	53	52	52	51	47
16	1672	3443	6914	10464	13917	17433	20899	24277	27665	30876	34137
	189	389	781	1182	1572	1970	2361	2743	3126	3488	3857
61	77	76	75	74	72	70	69	69	69	67	64
20	1593	3030	6725	10683	13805	17382	21190	24127	27617	31003	34271
	180	342	760	1207	1560	1964	2394	2726	3120	3503	3872
76	96	95	93	92	89	88	87	86	86	84	83
25	1318	3069	6821	10069	14201	17502	20649	24087	27319	30677	34030
	149	347	771	1138	1604	1977	2333	2721	3087	3466	3845
95	120	118	117	115	114	111	110	109	107	106	105
30	353	2852	6315	9620	13094	16683	20157	23463	26891	30390	33843
	40	322	713	1087	1479	1885	2277	2651	3038	3434	3824
114	141	142	140	139	137	134	133	132	130	129	127
35	275	2774	6138	9600	12903	16408	19956	23247	26714	29643	32238
	31	313	693	1085	1458	1854	2255	2627	3018	3349	3642
132	163	166	163	162	160	156	155	154	152	150	146
40	222	1351	4962	8665	12200	15774	19257	22501	25908	29362	32580
	25	153	561	979	1378	1782	2176	2542	2927	3317	3681
151	187	187	181	179	177	177	177	177	175	173	170

940 cm³/r [57.4 in³/r]

Δ Pressure Bar [PSI]

Flow LPM [GPM]	250	500	1000	1500	2000	2500	3000	3500	4000
	15	35	70	105	140	170	205	240	275
4	1935	4056	8216	12325	16185	20071	23940	27620	30111
	219	458	928	1393	1829	2268	2705	3121	3402
15	16	16	16	15	15	15	14	14	14
8	1972	4114	8311	12473	16557	20658	24727	28631	32670
	223	465	939	1409	1871	2334	2794	3235	3691
30	32	31	31	30	29	29	28	28	27
12	1875	4094	8346	12582	16722	20857	24987	29019	32933
	212	463	943	1422	1889	2357	2823	3279	3721
45	48	47	46	45	45	45	45	44	43
16	2000	4117	8268	12513	16642	20846	24992	29032	33083
	226	465	934	1414	1880	2355	2824	3280	3738
61	64	63	62	62	60	59	58	58	57
20	1905	3623	8042	12776	16509	20786	25339	28851	33025
	215	409	909	1443	1865	2348	2863	3260	3731
76	80	79	78	77	75	74	73	72	72
25	1576	3670	8157	12041	16982	20929	24693	28804	32669
	178	415	922	1360	1919	2365	2790	3254	3691
95	100	99	98	96	96	93	92	91	90
30	423	3411	7551	11504	15658	19950	24104	28057	32157
	48	385	853	1300	1769	2254	2723	3170	3633
114	118	119	117	116	115	112	111	110	109
35	329	3317	7340	11480	15429	19621	23864	27799	31945
	37	375	829	1297	1743	2217	2696	3141	3609
132	137	139	136	135	133	130	130	128	127
40	266	1616	5934	10361	14589	18863	23029	26907	30982
	30	183	670	1171	1648	2131	2602	3040	3500
151	156	156	152	149	148	148	148	148	147

5934 / 670 / 152 } Torque [lb-in] / Nm / Speed RPM

VIS 40 Series

Dimensions

Standard and Wheel Mount – SAE

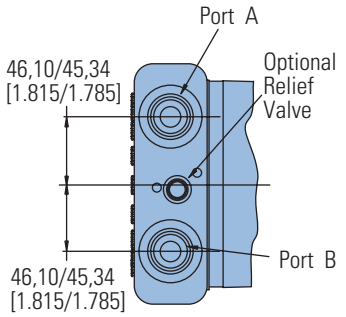

Ports

1–1/16-12 UN-2B SAE O-ring Ports (2)

9/16-18 UNF-2B SAE O-ring Case Drain Port (1)

Standard Rotation Viewed from Shaft End

Port A Pressurized — CW

Port B Pressurized — CCW

Standard Motors (SAE)

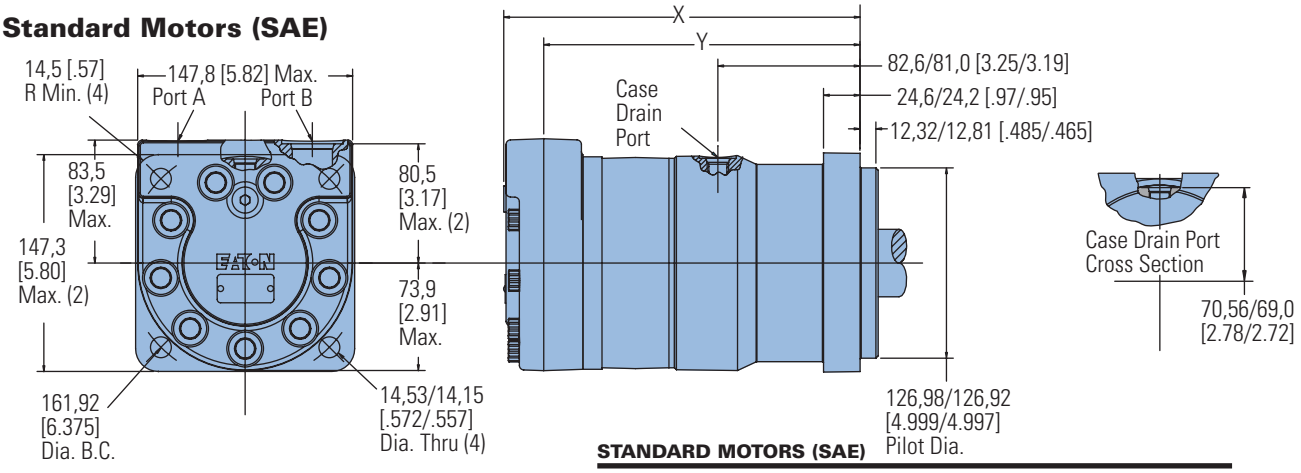

STANDARD MOTORS (SAE)

Displacement cm³/r [in³/r]	X mm [inch]	Y mm [inch]
325 [19.8]	223,5 [8.80]	195,3 [7.69]
400 [24.4]	230,4 [9.07]	201,9 [7.95]
505 [30.7]	239,3 [9.42]	211,1 [8.31]
570 [34.9]	245,4 [9.66]	217,2 [8.55]
630 [38.5]	250,7 [9.87]	222,5 [8.76]
685 [41.7]	255,3 [10.05]	227,1 [8.94]
785 [48.0]	264,7 [10.42]	236,2 [9.30]
940 [57.4]	278,4 [10.96]	249,9 [9.84]

Wheel Motors (SAE)

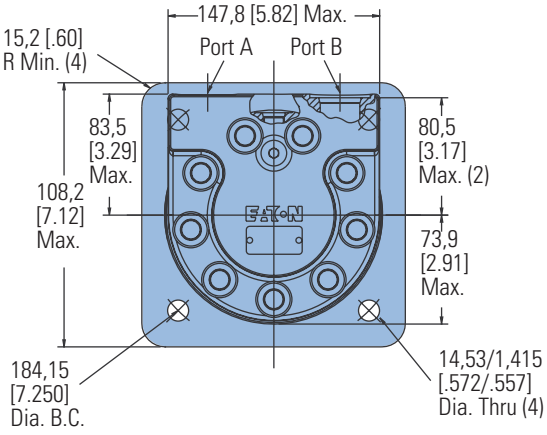

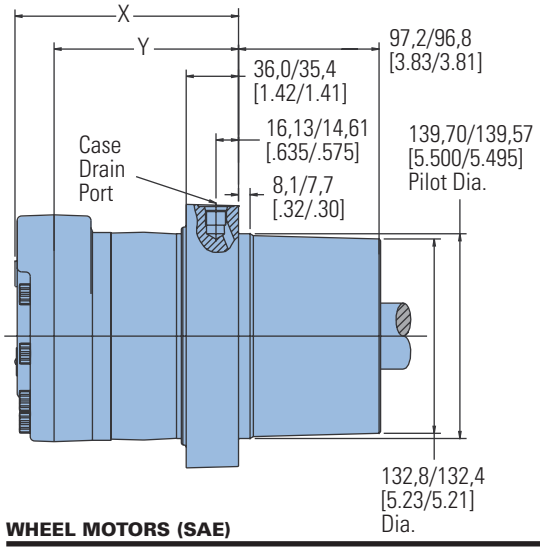

WHEEL MOTORS (SAE)

Displacement cm³/r [in³/r]	X mm [inch]	Y mm [inch]
325 [19.8]	138,7 [5.46]	110,5 [4.35]
400 [24.4]	145,5 [5.73]	117,1 [4.61]
505 [30.7]	154,4 [6.08]	126,2 [4.97]
570 [34.9]	160,5 [6.32]	132,3 [5.21]
630 [38.5]	165,9 [6.53]	137,7 [5.42]
685 [41.7]	170,4 [6.71]	142,2 [5.60]
785 [48.0]	179,8 [7.08]	151,4 [5.96]
940 [57.4]	193,5 [7.62]	165,1 [6.50]

VIS 40 Series

Dimensions

Oversize Flange
224,0 [8.82] B.C.

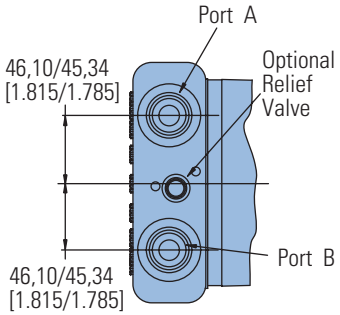

Ports

1–1/16-12 UN-2B SAE O-ring Ports (2)

9/16-18 UNF-2B SAE O-ring Case Drain Port (1)

Standard Rotation Viewed from Shaft End

Port A Pressurized — CW

Port B Pressurized — CCW

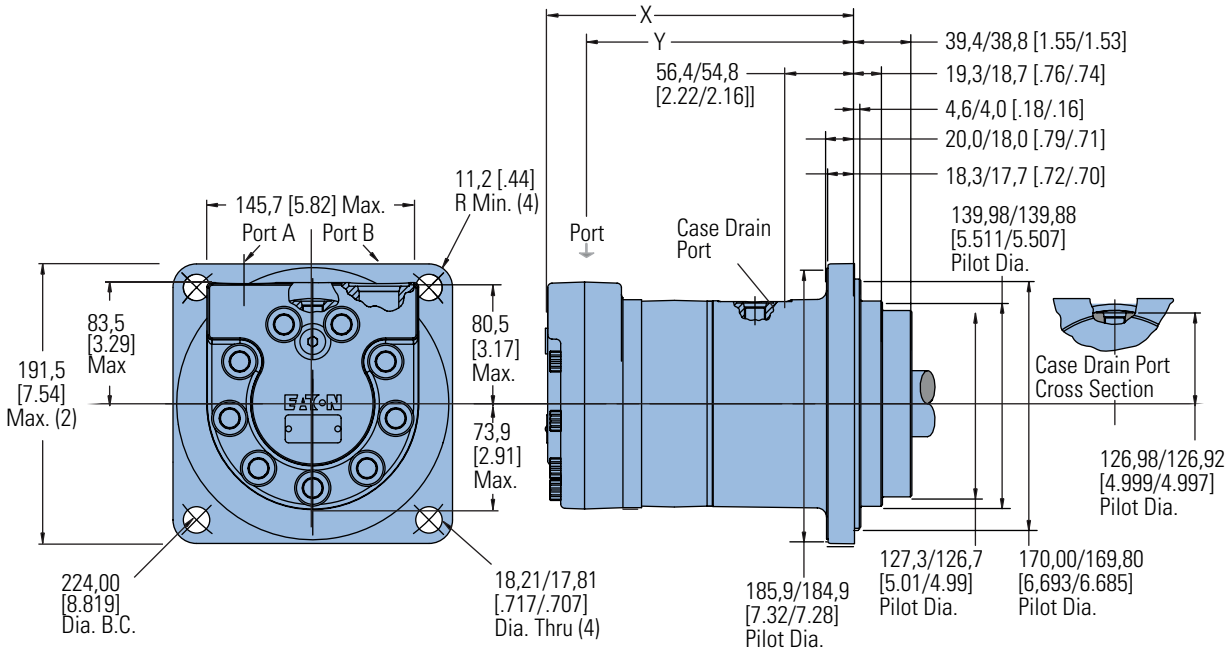

STANDARD MOTORS (OVERSIZE)

Displacement cm^3/r [in^3/r]	X mm [inch]	Y mm [inch]
325 [19.8]	196,6 [7.74]	168,1 [6.62]
400 [24.4]	203,2 [8.00]	175,0 [6.89]
505 [30.7]	181,4 [8.36]	183,9 [7.24]
570 [34.9]	187,4 [8.60]	190,2 [7.49]
630 [38.5]	192,5 [8.81]	195,3 [7.69]
685 [41.7]	197,6 [8.99]	199,9 [7.87]
785 [48.0]	206,8 [9.35]	209,3 [8.24]
940 [57.4]	220,5 [9.89]	223,0 [8.78]

VIS 40 Series

Dimensions

Standard and Wheel Mount – ISO

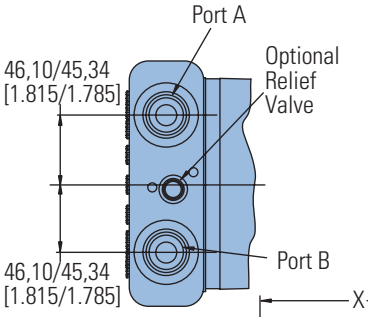

Ports

G 3/4 (BSP) O-ring Ports (2)

G 1/4 (BSP) O-ring Case Drain Port (1)

Standard Rotation Viewed from Shaft End

Port A Pressurized — CW

Port B Pressurized — CCW

Standard Motors (ISO)

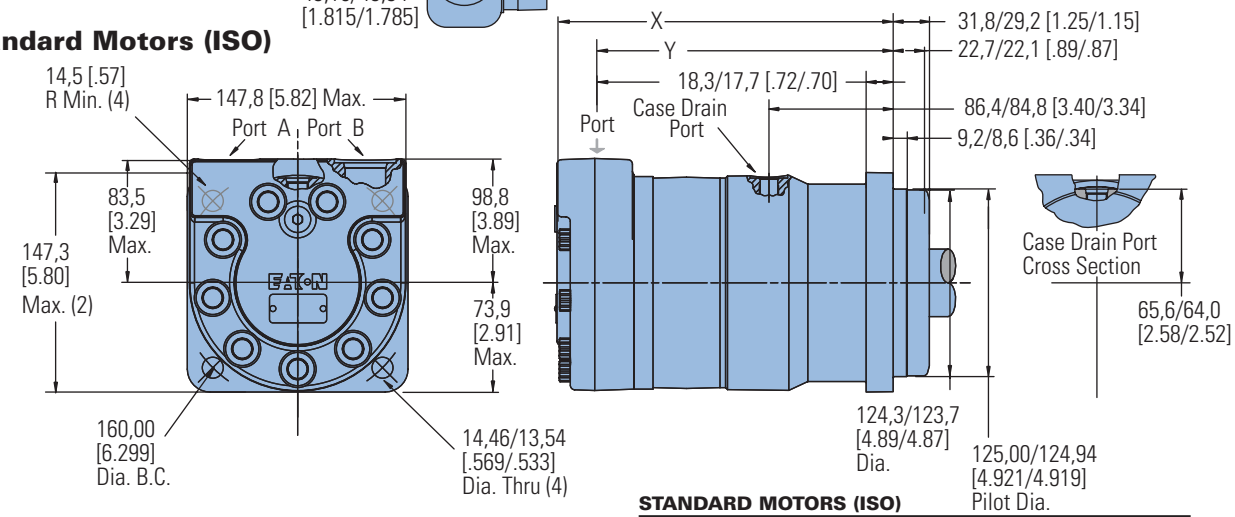

STANDARD MOTORS (ISO)

Displacement cm³/r [in³/r]	X mm [inch]	Y mm [inch]
325 [19.8]	211,6 [8.33]	183,1 [7.21]
400 [24.4]	218,2 [8.59]	190,0 [7.48]
505 [30.7]	227,3 [8.95]	198,9 [7.83]
570 [34.9]	233,4 [9.19]	205,2 [8.08]
630 [38.5]	238,8 [9.40]	210,3 [8.28]
685 [41.7]	243,3 [9.58]	214,9 [8.46]
785 [48.0]	252,5 [9.94]	224,3 [8.83]
940 [57.4]	266,2 [10.48]	238,0 [9.37]

Wheel Motors (ISO)

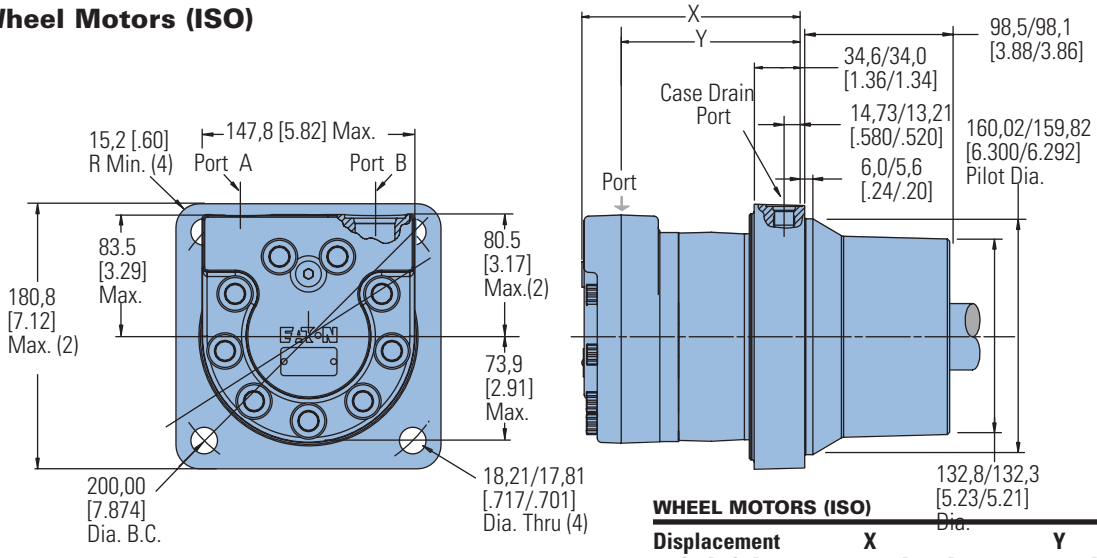

WHEEL MOTORS (ISO)

Displacement cm³/r [in³/r]	X mm [inch]	Y mm [inch]
325 [19.8]	137,4 [5.41]	109,0 [4.29]
400 [24.4]	144,0 [5.67]	115,8 [4.56]
505 [30.7]	153,2 [6.03]	124,7 [4.91]
570 [34.9]	159,3 [6.27]	131,1 [5.16]
630 [38.5]	164,6 [6.48]	136,1 [5.36]
685 [41.7]	169,2 [6.66]	140,7 [5.54]
785 [48.0]	178,3 [7.02]	150,1 [5.91]
940 [57.4]	192,0 [7.56]	163,8 [6.45]

VIS 40 Series

Dimensions

Bearingless

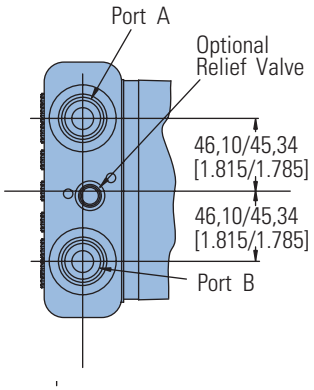

Ports

1-1/16-12 UN-2B SAE O-ring Ports (2)

9/16-18 UNF-2B SAE O-ring Case Drain Port (1)

Or

G 3/4 (BSP) O-ring Ports (2)

G 1/4 (BSP) O-ring Case Drain Port (1)

Standard Rotation Viewed from Drive End

Port A Pressurized — CW

Port B Pressurized — CCW

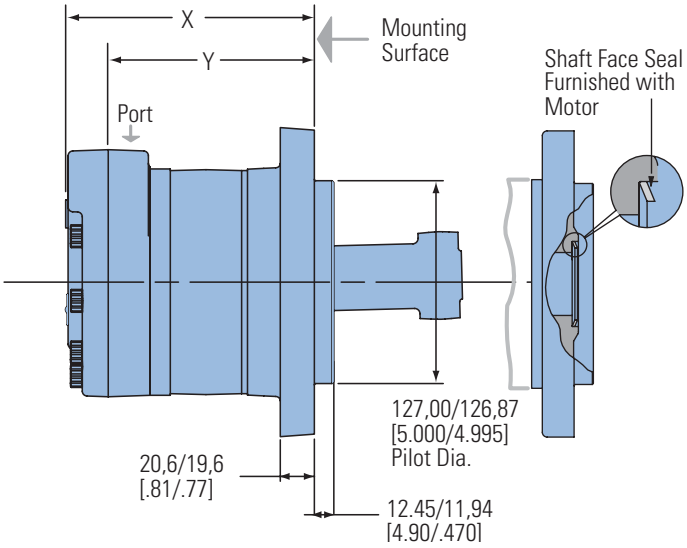

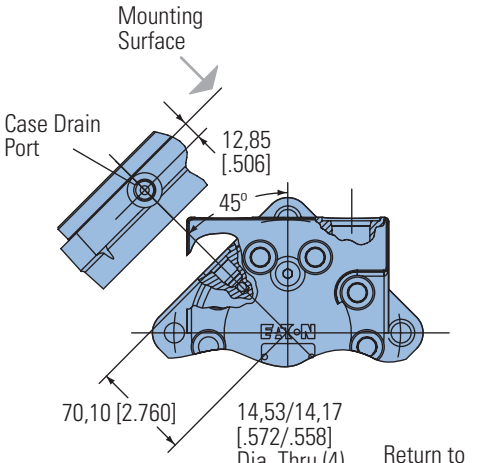

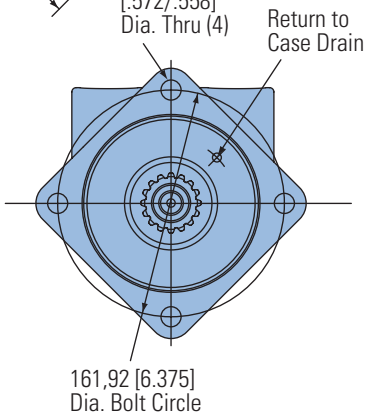

For VIS 40 bearingless motor application information, contact your Eaton representative (mating coupling blanks available from Eaton Hydraulics).

C 59,94 [2.36] Dia.
D 49,00 [1.93] Dia.
E 155,86 [6.14] Max.
F 150,88 [5.94] Min. Full Form Dia.
G 26,92 [1.06]
H 33,30 [1.21]
J 106,43 [4.19] Full Form Dia.
K 72,64 [2.86]
L 15

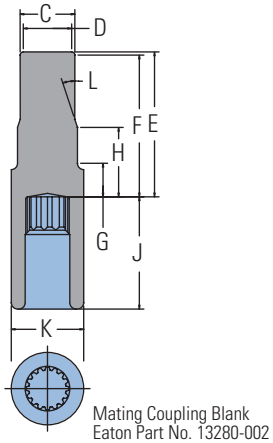

Note:

After machining blank, part must be hardened per Eaton specification.

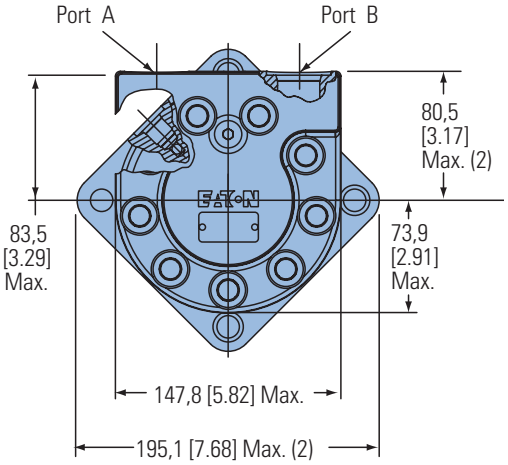

BEARINGLESS MOTORS

Displacement cm³/r [in³/r]	X mm [inch]	Y mm [inch]
325 [19.8]	141,2 [5.56]	113,3 [4.46]
400 [24.4]	148,1 [5.83]	120,1 [4.73]
505 [30.7]	157,2 [6.19]	129,0 [5.08]
570 [34.9]	163,3 [6.43]	135,1 [5.32]
630 [38.5]	168,4 [6.63]	140,5 [5.53]
685 [41.7]	173,2 [6.82]	145,3 [5.72]
785 [48.0]	182,2 [7.18]	154,4 [6.08]
940 [57.4]	196,1 [7.72]	168,1 [6.62]

VIS 40 Series

Installation Information

Bearingless

1 Internal spline in mating part to be per spline data. Specification material to be ASTM A304, 8620H carburize to a hardness of 60-64 HRc with case depth (to 50HRc) of 0,076 -1,27 [.030 -.050]. Dimensions apply after heat treat.

〈2〉 Mating part to have critical dimensions as shown. Oil holes must be provided and open for proper oil circulation.

〈3〉 Seal to be furnished with motor for proper oil circulation thru splines.

〈4〉 Similar to SAE "C" Four Bolt Flange.

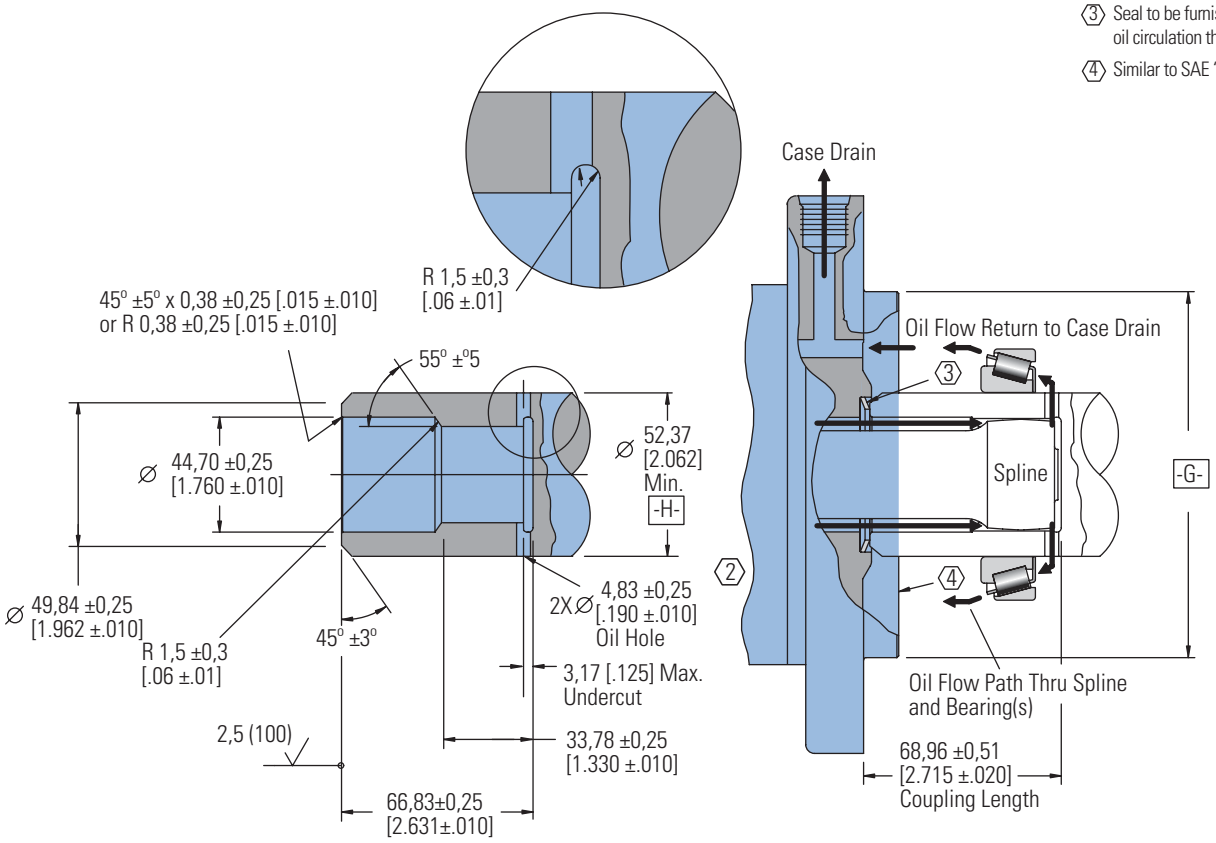

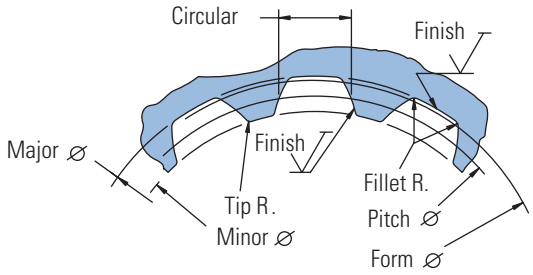

Spline Pitch	10/20
Pressure Angle	30°
Number of teeth	16
Class of Fit	Ref. 5
Type of Fit	Side
Pitch Diameter	Ref. 40,640000 [1.6000000] ◎ 0,20 [.008] | H
Base Diameter	Ref. 35,195272 [1.3856406]
Major Diameter	43,56 [1.715] Max. 43,18 [1.700]
Min. Minor Diameter	36,83 -37,08 [1.450 -1.460]
Form Diameter, Min.	42.47 [1.672]
Fillet Radius	0,64 -0,76 [.025 -.030]
Tip Radius	0,25 -0,51 [.010 -.020]
Finish	1,6 (63)
Involute Profile Variation	+0,000 -0,025 [+.0000 -.0010]
Total Index Variation	0,040 [.0016]
Lead Variation	0,013 [.0005]
Circular Space Width:	
Maximum Actual	4.105 [.1616]
Minimum Effective	3,995 [.1573]
Maximum Effective	Ref. 4,056 [.1597]
Minimum Actual	Ref. 4,081 [.1582]
Dimension Between Two Pins	Ref. 34,272 -34,450 [1.3493 -1.3563]
Pin Diameter	4,389 [.1728]

D-2

VIS 40 Series

Dimensions Shafts

SAE

40 mm Straight

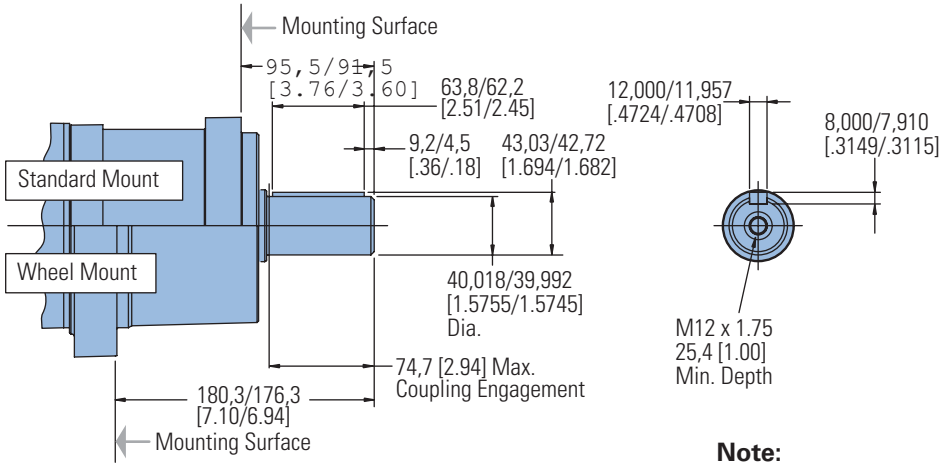

Note:

For motor torque ratings above 875 Nm [7750 lb - in] use split coupler.

1–1/2 Inch 17 Tooth Splined

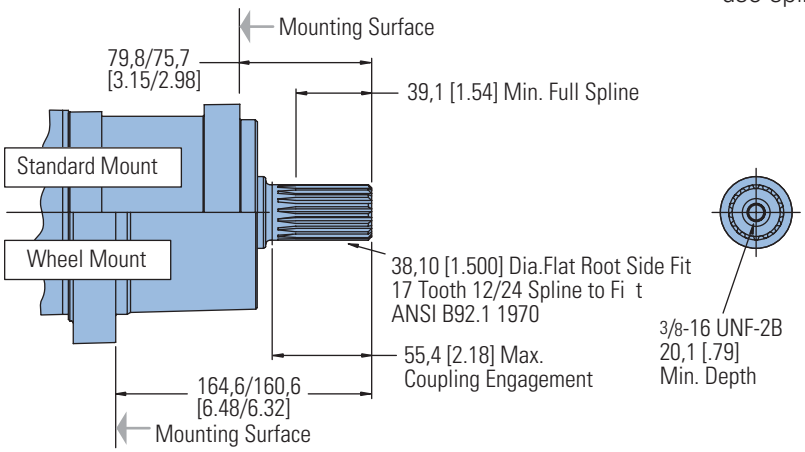

1–3/4 Inch Tapered

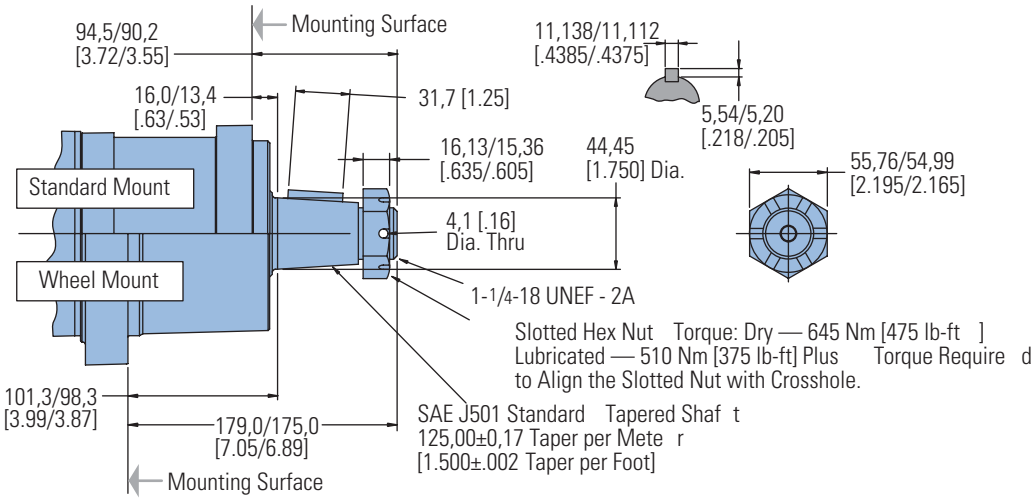

VIS 40 Series

Side Load Capacity

SAE

These curves indicate the radial load capacity on the motor shaft(s) at various locations.

The curve is based on B 10 bearing life (2000 hours of 12,000,000 shaft revolutions at 100 RPM) at rated output torque. To determine radial load at speeds other than 100 RPM, multiply the load values given on the bearing curve by the factors in the chart below.

RPM	Multiplication Factor
50	1.23
100	1.00
200	0.81
300	0.72
400	0.66
500	0.62
600	0.58
700	0.56
800	0.54

For 3,000,000 shaft revolutions or 500 hours — Increase these shaft loads 52%.

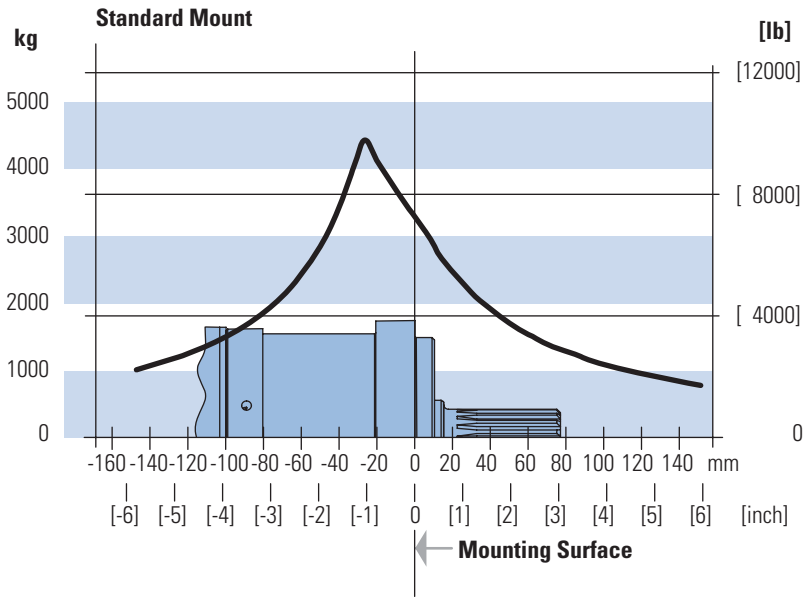

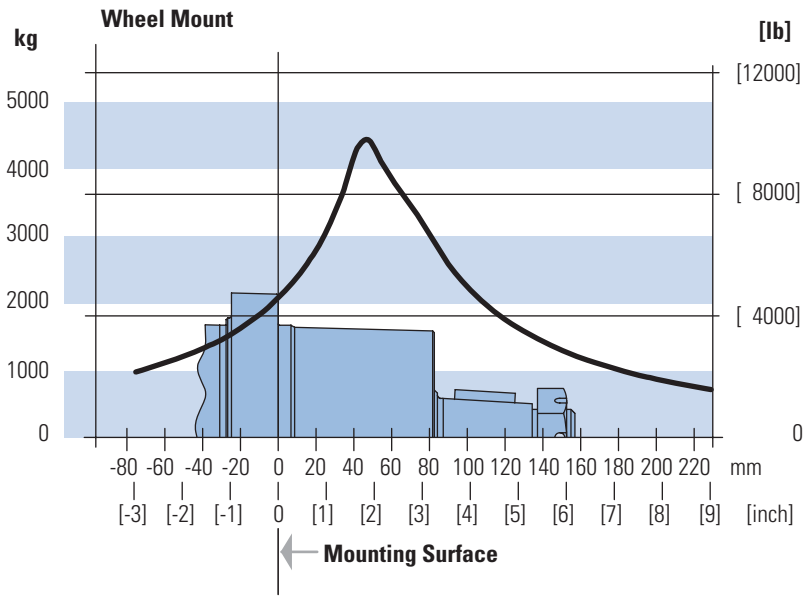

D-2

VIS 40 Series

Dimensions Shafts

Oversize Flange
224,0 [8.82] B.C.

40 mm Straight

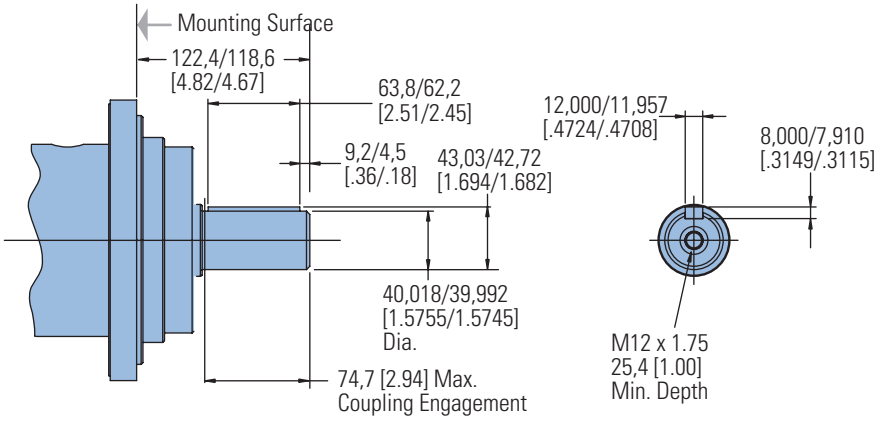

Note:

For motor torque ratings above 875 Nm [7750 lb - in] use split coupler.

46 mm 28 Tooth Splined

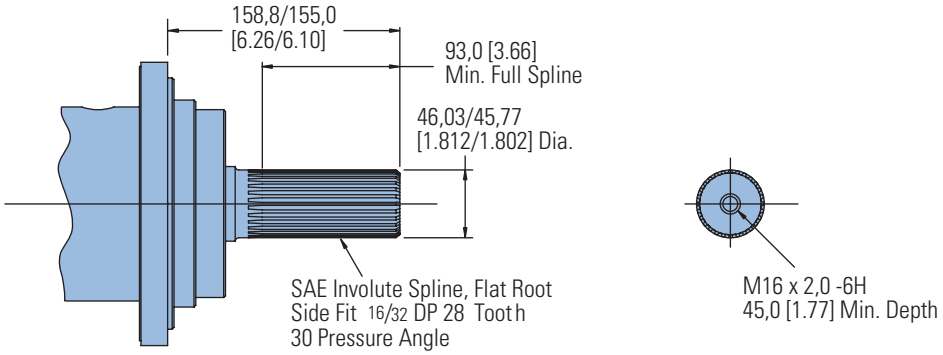

1-3/4 Inch Tapered

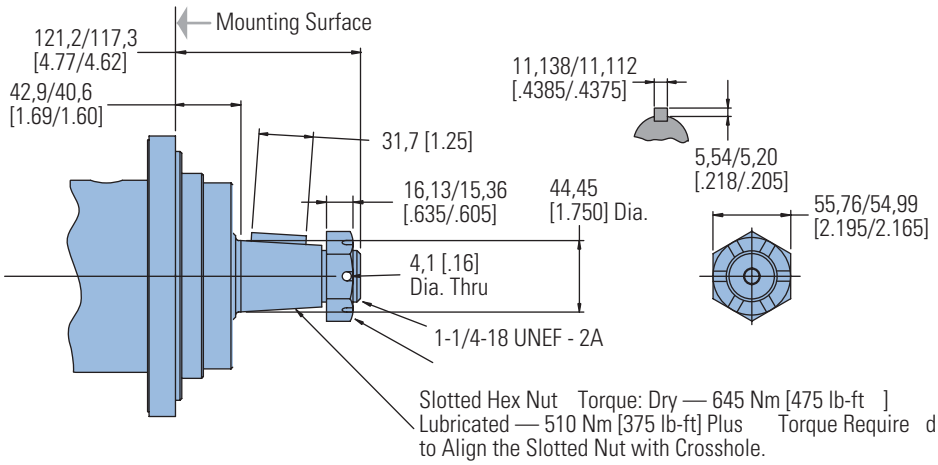

SAE J501 Standard Tapered Shaft
125,00±0,17 Taper per Meter
[1.500±.002 Taper per Foot]

VIS 40 Series

Side Load Capacity

Oversize Flange
224,0 [8.82] B.C.

These curves indicate the radial load capacity on the motor shaft(s) at various locations.

The curve is based on B 10 bearing life (2000 hours of 12,000,000 shaft revolutions at 100 RPM) at rated output torque.
To determine radial load at speeds other than 100 RPM, multiply the load values given on the bearing curve by the factors in the chart below.

RPM	Multiplication Factor
50	1.23
100	1.00
200	0.81
300	0.72
400	0.66
500	0.62
600	0.58
700	0.56
800	0.54

For 3,000,000 shaft revolutions or 500 hours — Increase these shaft loads 52%.

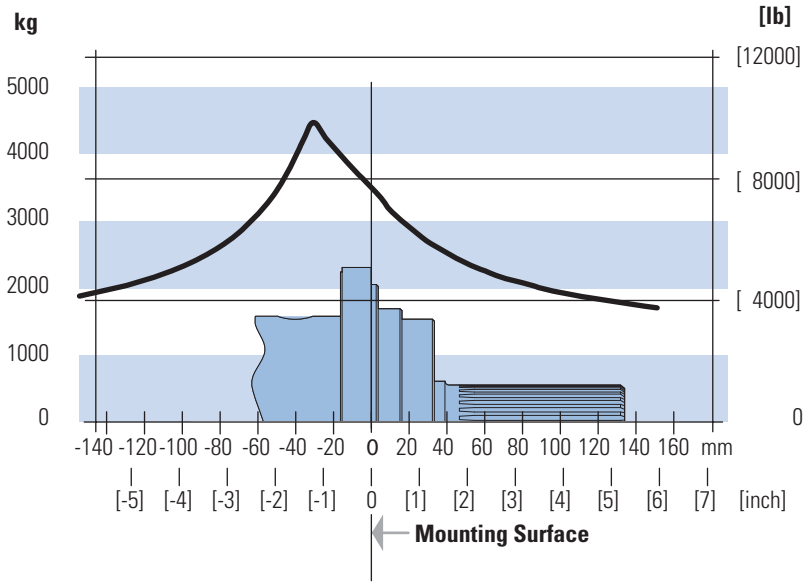

D-2

VIS 40 Series

Dimensions
Shafts
ISO

40 mm Straight

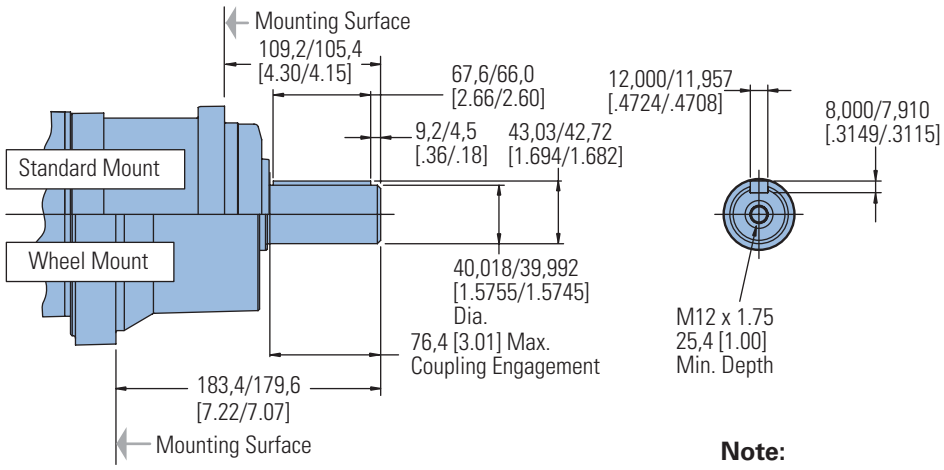

Note:
For motor torque ratings above 875 Nm [7750 lb - in] use split coupler.

38,1 mm [1–1/2 inch] 17 Tooth Splined

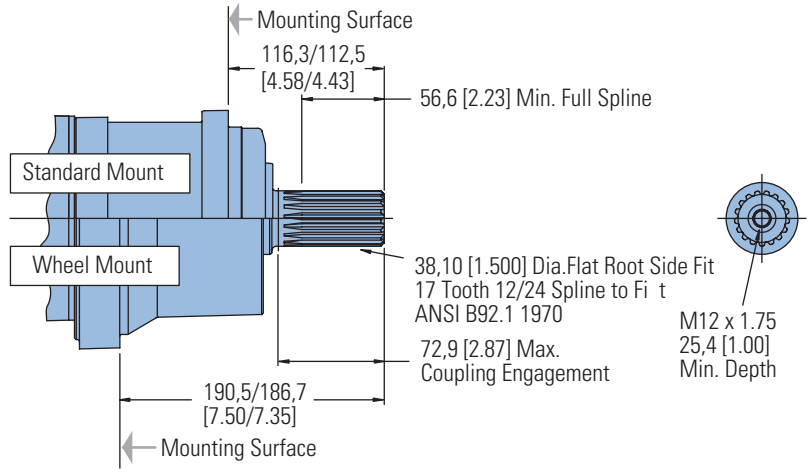

45 mm Tapered

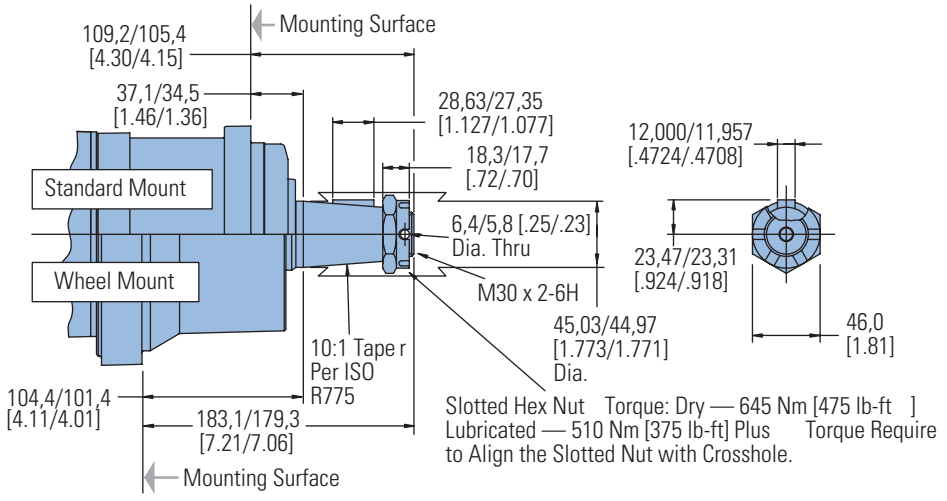

VIS 40 Series

Side Load Capacity

ISO

These curves indicate the radial load capacity on the motor shaft(s) at various locations.

The curve is based on B 10 bearing life (2000 hours of 12,000,000 shaft revolutions at 100 RPM) at rated output torque. To determine radial load at speeds other than 100 RPM, multiply the load values given on the bearing curve by the factors in the chart below.

RPM	Multiplication Factor
50	1.23
100	1.00
200	0.81
300	0.72
400	0.66
500	0.62
600	0.58
700	0.56
800	0.54

For 3,000,000 shaft revolutions or 500 hours — Increase these shaft loads 52%.

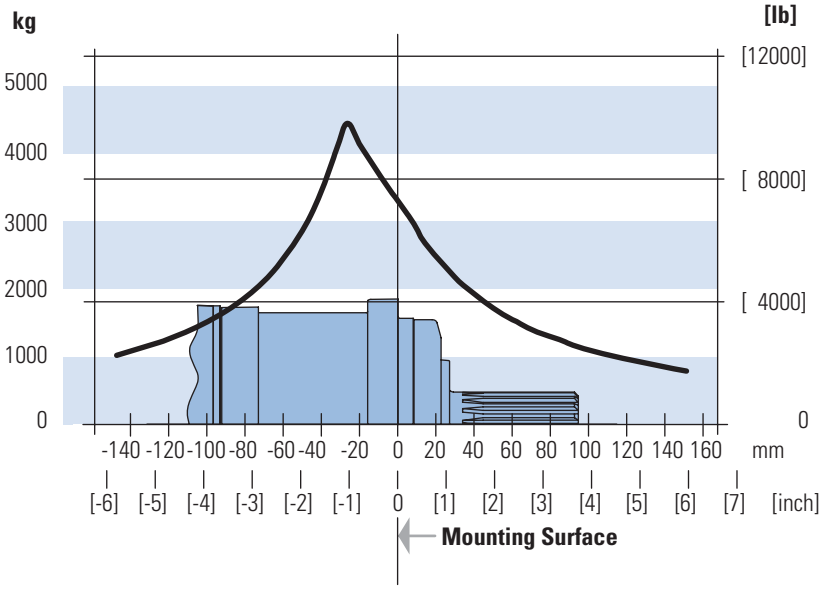

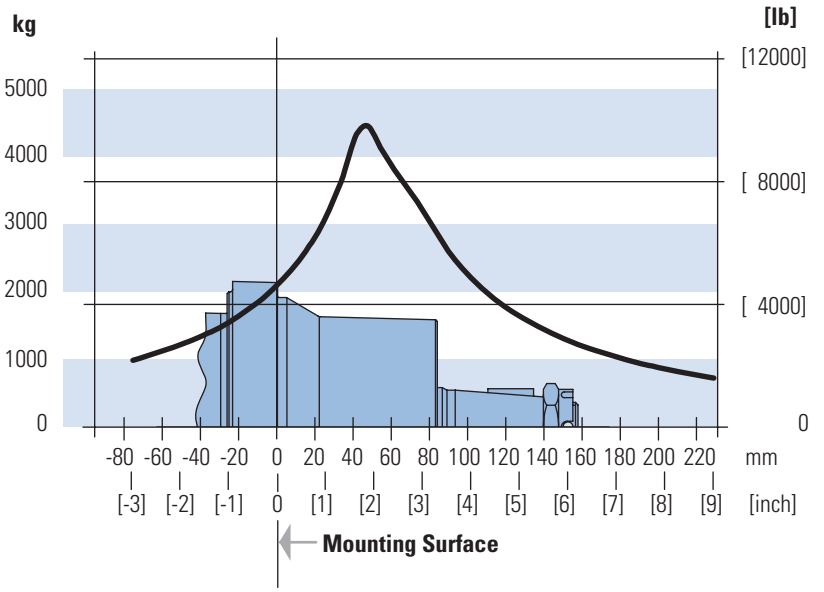

D-2

VIS 40 Series

Product Numbers

Closed Loop

Use digit prefix — 168-, 177-, or 180- plus four digit number from charts for complete product number— Example: 168-0018.

Orders will not be accepted without three digit prefix.

SAE

MOUNTING	SHAFT	PORT SIZE	DISPL. cm^3/r [in^3/r] / PRODUCT NUMBER							
			325 [19.8]	400 [24.4]	505 [30.7]	570 [34.9]	630 [38.5]	685 [41.7]	785 [48.0]	940 [57.4]
Standard	40 mm Straight	1 1/16 -12 UNF O-ring (2) 9/16 -18 UNC Drain Port (1)	177-0220	-0218	-0032	-0022	-0033	-0034	-0035	-0036
	1 1/2 inch 17 Tooth Splined	1 1/16 -12 UNF O-ring (2) 9/16 -18 UNC Drain Port (1)	177-0221	–	-0024	-0026	-0037	-0038	-0039	-0040
	1 3/4 inch Tapered	1 1/16 -12 UNF O-ring (2) 9/16 -18 UNC Drain Port (1)	–	–	-0041	-0042	-0043	-0044	-0045	-0046
Wheel	40 mm Straight	1 1/16 -12 UNF O-ring (2) 9/16 -18 UNC Drain Port (1)	–	–	-0007	-0008	-0009	-0010	-0011	-0012
	1 1/2 inch 17 Tooth Splined	1 1/16 -12 UNF O-ring (2) 9/16 -18 UNC Drain Port (1)	–	–	-0013	-0014	-0015	-0016	-0017	-0018
	1 3/4 inch Tapered	1 1/16 -12 UNF O-ring (2) 9/16 -18 UNC Drain Port (1)	–	180-0088	-0019	-0020	-0021	-0022	-0023	-0024
Bearingless		1 1/16 -12 UNF O-ring (2) 9/16 -18 UNC Drain Port (1)	–	–	-0015	-0016	-0017	-0018	-0019	-0020

168-0018

Oversize

MOUNTING	SHAFT	PORT SIZE	DISPL. cm^3/r [in^3/r] / PRODUCT NUMBER							
			325 [19.8]	400 [24.4]	505 [30.7]	570 [34.9]	630 [38.5]	685 [41.7]	785 [48.0]	940 [57.4]
Standard	40 mm Straight	1 1/16 -12 UNF O-ring (2) 9/16 -18 UNC Drain Port (1)	–	–	177-0047	-0048	_	_	_	_
	46 mm 28 Tooth Splined	1 1/16 -12 UNF O-ring (2) 9/16 -18 UNC Drain Port (1)	–	–	177-0053	-0054	_	_	_	_
	1 3/4 inch Tapered	1 1/16 -12 UNF O-ring (2) 9/16 -18 UNC Drain Port (1)	–	–	177-0059	-0060	_	_	_	_

ISO

MOUNTING	SHAFT	PORT SIZE	DISPL. cm^3/r [in^3/r] / PRODUCT NUMBER							
			325 [19.8]	400 [24.4]	505 [30.7]	570 [34.9]	630 [38.5]	685 [41.7]	785 [48.0]	940 [57.4]
Standard	40 mm Straight	G 3/4 (BSP) (2) G 1/4 (BSP) Drain Port (1)	–	–	-0065	-0066	-0067	-0068	-0069	-0070
	45 mm Tapered	G 3/4 (BSP) (2) G 1/4 (BSP) Drain Port (1)	177-0223	-0224	-0071	-0072	-0073	-0074	-0075	-0076
	1 1/2 inch 17 Tooth Splined	G 3/4 (BSP) (2) G 1/4 (BSP) Drain Port (1)	–	–	-0077	-0078	-0079	-0080	-0081	-0082
Wheel	40 mm Straight	G 3/4 (BSP) (2) G 1/4 (BSP) Drain Port (1)	–	–	-0025	-0026	-0027	-0028	-0029	-0030
	45 mm Tapered	G 3/4 (BSP) (2) G 1/4 (BSP) Drain Port (1)	–	–	-0031	-0032	-0033	-0034	-0035	-0036
	1 1/2 inch 17 Tooth Splined	G 3/4 (BSP) (2) G 1/4 (BSP) Drain Port (1)	–	–	-0037	-0038	-0039	-0040	-0041	-0042
Bearingless		G 3/4 (BSP) (2) G 1/4 (BSP) Drain Port (1)	–	–	-0021	-0022	-0023	-0024	-0025	-0026

168-0024

Note:

The product numbers on this page are for motors used in closed loop circuits. They include a back-pressure relief valve that is set at 4,5 bar [65 PSI].

- A case drain is required for all closed loop VIS motor applications.
- The maximum case pressure for the VIS motor is 3,5 bar [50 PSI].

VIS 40 Series

Model Code

The following 16 - digit coding system has been developed to identify all of the configuration options for the VIS 40 motor. Use this model code to specify a motor with the desired features. All 16 digits of the code must be present when ordering. You may want to photocopy the matrix below to ensure that each number is entered in the correct box.

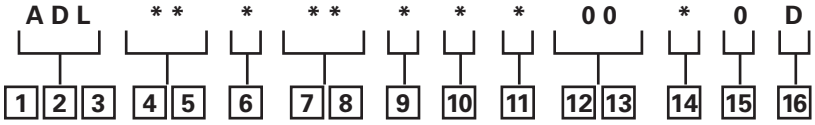

1, 2, 3 Product Series

ADL – VIS 40 Motor

4, 5 Displacement cm³/r [in³/r]

20 – 325 [19.8]

24 – 400 [24.4]

31 – 505 [30.7]

35 – 570 [34.9]

38 – 630 [38.5]

42 – 685 [41.7]

48 – 785 [48.0]

57 – 940 [57.4]

6 Mounting Type

A – 4 Bolt Bearingless 127,00 [5.000] Pilot Dia. with 12,19 [.480] Pilot Length and 14,35 [.565] Dia holes on 161,92 [6.375] Dia. Bolt Circle

B – 4 Bolt Wheel Mount 160,00 [6.3] Pilot Dia. With 5,8 [.23] Pilot Length and 18,00 [.709] Dia. Holes on 200,00 [7.874] Dia. Bolt Circle (ISO Compatible)

C – 4 Bolt Oversize Flange 185,4 [7.30] Rear Pilot Dia., 169,90 [6.689], 139,93 [5.509], 127,0 [5.00] Dia (Front Pilots) and 18,01 [.709] Dia. Holes on 224,00 [8.819] Dia. Bolt Circle

F – 4 Bolt Standard Mount (SAE CC) 127,00 [5.000] Pilot Dia. With 12,2 [.48] Pilot Length and 14,32 [.564] Dia. Holes on 161,92 [6.375] Dia. Bolt Circle

G – 4 Bolt Wheel Mount 139,7 [5.50] Pilot Dia. with 7,9 [.31] Pilot Length and 14,32 [.564] Dia. Holes on 184,15 [7.250] Dia. Bolt Circle (SAE Compatible)

H – 4 Bolt Standard Mount 125,00 [4.92] Pilot Dia. with 8,9 [.35] Pilot Length and 14,00 [.551] Dia. Holes on 160,00 [6.299] Dia. Bolt Circle (ISO Compatible)

M – Standard, 4 Bolt: 169,75 [6.683] Pilot Dia. with 4,3 [.17] Pilot Length and M16 X 2 -6H Threaded Holes on 224,00 [8.819] Dia. Bolt Circle (To be selected for Brake Option)

7, 8 Output Shaft

00 – None (Bearingless)

01 – 45 mm Dia. 10:1 Tapered Shaft Per ISO R775 with M30 x 2- 6H Threaded Shaft End, 12W x 8H X 28L [.472W x .313H x 1.102L] Key

02 – 1-3/4 inch Dia. .125:1 Tapered Shaft Per SAE J 501 with 1 1/4 - 18 UNEF - 2A Threaded Shaft End, 11,11 [.4375] Square x 31,8 [1.25] Straight Key

04 – 46 mm Dia. Flat Root Side Fit, 28 Tooth, 16/32 DP 30 Degree Involute Spline, 93,0 [3.66] Minimum Full Spline with M16 X 2,0-6H Thread in End

07 – 40 mm Dia. Straight Shaft with M12 x 1,75 - 6H Thread in End, 12W x 8H x 63L [.472W x .313H x 2.480L] Key (SAE Compatible)

08 – 1-1/2 inch Dia. Flat Root Side Fit, 17 Tooth, 12/24 DP 30 Degree Involute Spline, 39,1 [1.54] Minimum Full Spline with 3/8-16 UNC - 2B Thread in End (SAE Compatible)

09 – 1-1/2 inch Dia. Flat Root Side Fit, 17 Tooth, 12/24 DP 30 Degree Involute Spline, 56,6 [2.23] Minimum Full Spline with M12 x 1.75 - 6H Thread in End (ISO Compatible)

10 – 40 mm Dia. Straight Shaft with M12 x 1,75 - 6H Thread in End, 12W x 8H x 67L [.472W x .313H x 2.630L] Key (ISO Compatible)

9 Ports

A – 1-1/16-12 UN-2B Size 12 O-ring Port, Accepts Fittings for SAE J1926

B – G 3/4 (BSP) Straight Thread Port

10 Case Flow Options

A – Shuttle Valve with 9/16-18 UNF-2B, Size 6 O-ring Port Case Drain, Accepts Fittings for SAE J1926

B – Shuttle Valve with G 1/4 (BSP) Straight Thread Port Case Drain

C – Check valve with leakage orifice, no case drain (for Open Loop only)

11 Back-Pressure Relief

0 – None (for Open Loop Only)

1 – Set at 4,5 bar [65 PSI] (for Manual Pumps)

2 – Set at 15,2 bar [220 PSI] (for Servo Pumps)

4 – Set at 15,2 bar [300 PSI] (for high charge Servo Pumps)

12, 13 Special Features

00 – None

08 – Spring Applied Hydraulic Release Wet Brake with Brake Capacity of 20,000 lbf-in Static and 150 lbf/in² release pressure

14 Paint/ Special Packaging

0 – Primer, Individual Box

A – Low Gloss Black Primer, Individual Box

B – No Paint, Bulk Box Option

C – Low Gloss Black Primer, Bulk Box Option

15 Eaton Assigned Code when Applicable

0 – Assigned Code

16 Eaton Assigned Design Code

D – Assigned Design Code

VIS 40 Series Two-speed

Specifications

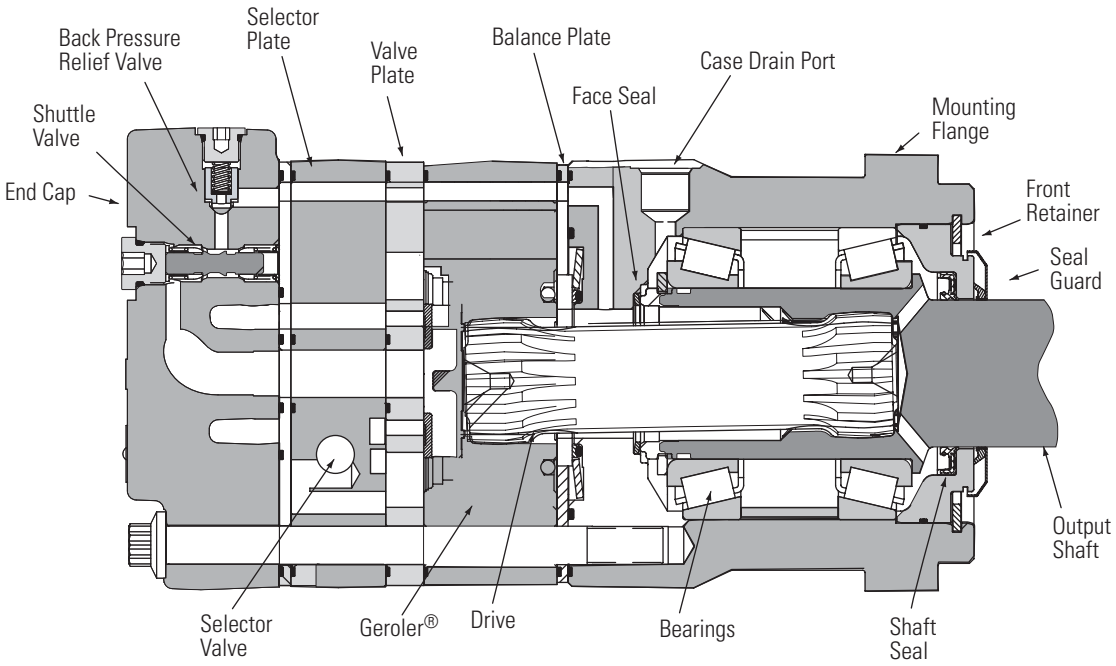

VIS 40 Series motors are available with an integral two-speed feature that allows the operator to shift the motor between low speed high torque (LSHT) mode and high speed low torque (HSLT) mode.

In the LSHT mode, output torque and rotation speed values are equal to those of the conventional VIS 40 motor. In the HSLT mode motor displacement is reduced by one third, resulting in a fifty percent increase in rotation speed and a torque output reduction of one third.

The VIS 40 two-speed motor is bidirectional. It will function with equal shaft output in either rotation direction (CW or CCW) in both LSHT and HSLT modes. Shift on the fly technology allows full-power operation throughout the full duration of the shift.

Changing between modes is accomplished by changing the displacement in a ratio of 1 to 1.5. An external two-position three-way control valve is required for shifting pressure to the pilot port between low pressure (LSHT mode) and pilot signal pressure (HSLT mode).

An integral selector valve shifts the motor from LSHT mode to HSLT mode. Initially, low pressure is supplied to the pilot port. The selector valve is biased to LSHT mode by a return spring. When pilot signal pressure is supplied to the pilot port and 3,5 Δbar [50 PSI] is reached, the selector valve overcomes return spring force and the shifts the spool to select HSLT mode.

Oil on the opposite side of the spool is drained to tank via the drain port. The pressure difference between the pilot port and drain port must be maintained to keep the motor in the high speed mode. When pilot pressure is removed from the pilot port, the pressure in the pilot end of the spool valve is relieved and drained back through the control valve and the return spring forces the spool valve to LSHT position.

Pilot pressure may come from any source that will provide uninterrupted pressure during the high-speed mode operation. Allowable pilot pressure must be at least 3,5 Δbar [50 PSI] and may be as high as full operating pressure of the motor.

All VIS 40 Series two-speed motors are equipped with a return line shuttle for closed circuit applications as standard equipment. All options available on the conventional VIS 40 are also available on VIS 40 two-speed motors.

Performance Data

In the LSHT mode, torque and speed values are equal to those of the conventional VIS 40 motor. In the HSLT mode, rotation speed is increased by fifty percent and torque output is reduced by one third. The VIS 40 two-speed motor will function with equal shaft output in either rotation direction (CW or CCW) in both LSHT and HSLT modes.

VIS 40 Series Two-speed

Dimensions

Standard and Wheel Mount – SAE

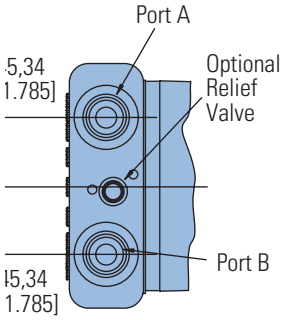

Ports

1–1/16-12 UN-2B SAE O-ring Ports (2)

9/16-18 UNF-2B SAE O-ring Case Drain Port (1)

7/16 -20 UNF -2B SAE O-ring Shift Ports (2)

Standard Rotation Viewed from Shaft End

Port A Pressurized — CW
Port B Pressurized — CCW

Standard Motors (SAE)

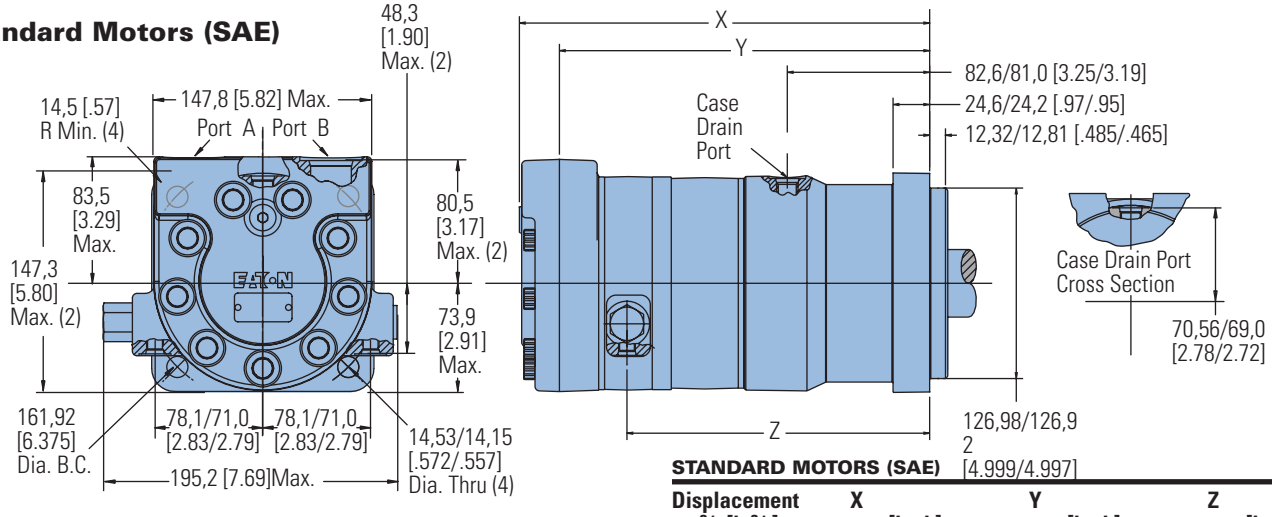

STANDARD MOTORS (SAE)

Displacement cm³/r [in³/r]	X mm [inch]	Y mm [inch]	Z mm [inch]
325 [19.8]	259,3 [10.21]	231,4 [9.11]	186,2 [7.33]
400 [24.4]	265,9 [10.47]	238,0 [9.37]	193,0 [7.60]
505 [30.7]	275,1 [10.83]	246,9 [9.72]	201,7 [7.94]
570 [34.9]	281,2 [11.07]	253,0 [9.96]	208,0 [8.19]
630 [38.5]	286,3 [11.27]	258,3 [10.17]	213,4 [8.40]
685 [41.7]	290,8 [11.45]	262,9 [10.35]	217,7 [8.57]
785 [48.0]	300,2 [11.82]	272,3 [10.72]	227,3 [8.95]
940 [57.4]	313,9 [12.36]	286,0 [11.26]	241,0 [9.49]

Wheel Motors (SAE)

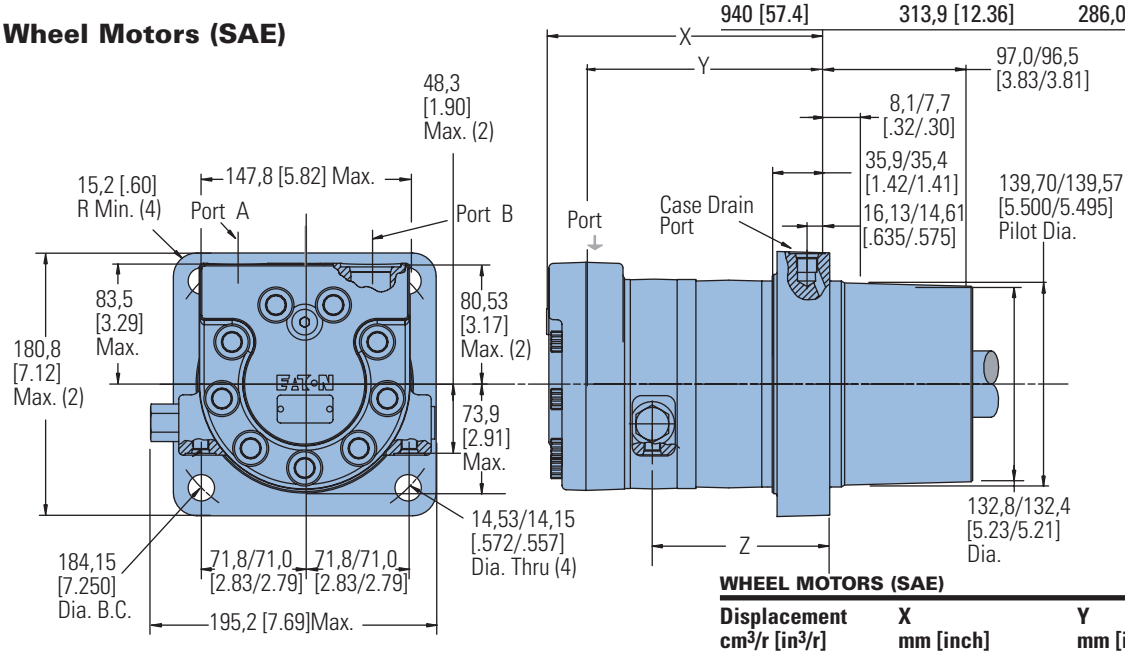

WHEEL MOTORS (SAE)

Displacement cm³/r [in³/r]	X mm [inch]	Y mm [inch]	Z mm [inch]
325 [19.8]	174,5 [6.87]	146,6 [5.77]	101,3 [3.99]
400 [24.4]	181,1 [7.13]	153,2 [6.03]	108,2 [4.26]
505 [30.7]	190,2 [7.49]	162,1 [6.38]	116,8 [4.60]
570 [34.9]	196,3 [7.73]	168,1 [6.62]	123,2 [4.85]
630 [38.5]	201,4 [7.93]	173,5 [6.83]	128,5 [5.06]
685 [41.7]	206,0 [8.11]	178,1 [7.01]	132,8 [5.23]
785 [48.0]	215,4 [8.48]	187,5 [7.38]	142,5 [5.61]
940 [57.4]	229,1 [9.02]	201,2 [7.92]	156,2 [6.15]

VIS 40 Series Two-speed

Dimensions

Oversize Flange
224,0 [8.82] B.C.

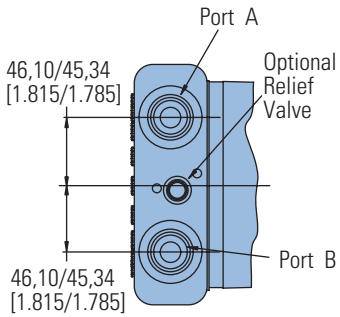

Ports

1–1/16-12 UN-2B SAE O-ring Ports (2)

9/16-18 UNF-2B SAE O-ring Case Drain Port (1)

7/16 -20 UNF -2B SAE O-ring Shift Ports (2)

Standard Rotation Viewed from Shaft End

Port A Pressurized — CW
Port B Pressurized — CCW

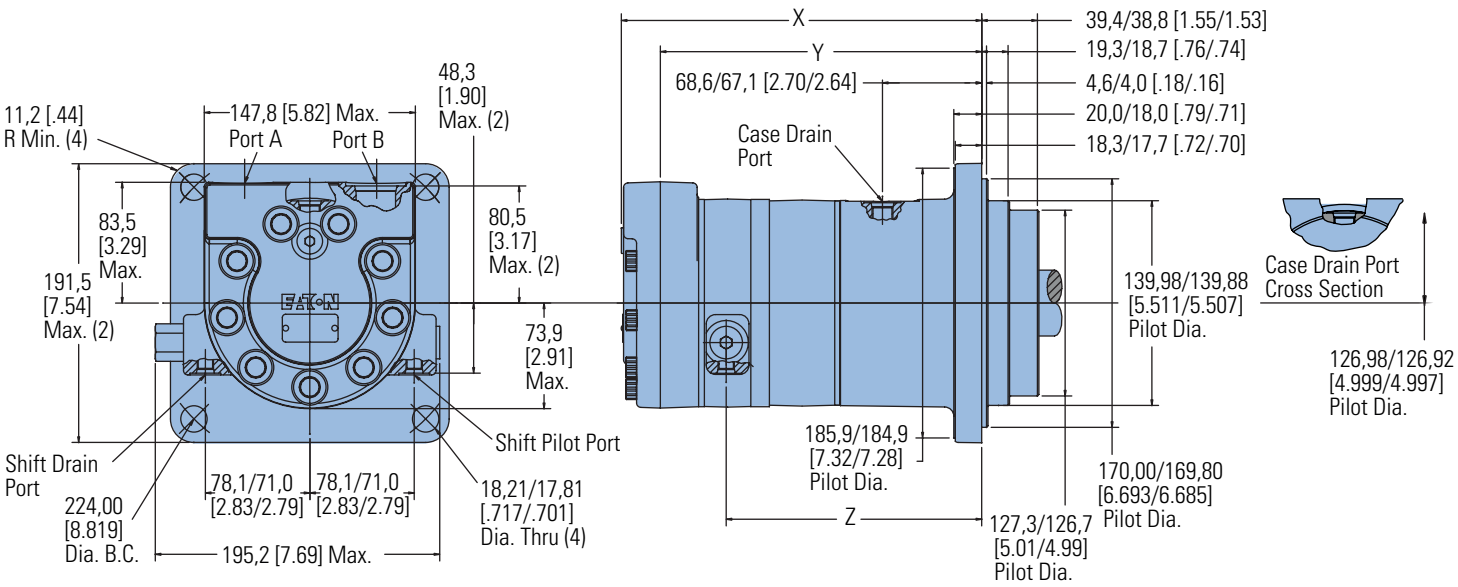

OVERSIZE MOTORS

Displacement cm^3/r [in^3/r]	X mm [inch]	Y mm [inch]	Z mm [inch]
325 [19.8]	232,4 [9.15]	204,0 [8.03]	159,0 [6.26]
400 [24.4]	239,3 [9.42]	210,6 [8.29]	165,6 [6.52]
505 [30.7]	248,2 [9.77]	220,0 [8.66]	174,8 [6.88]
570 [34.9]	254,3 [10.01]	226,1 [8.90]	181,1 [7.13]
630 [38.5]	259,3 [10.21]	231,4 [9.11]	186,4 [7.34]
685 [41.7]	263,9 [10.39]	236,0 [9.29]	190,8 [7.51]
785 [48.0]	273,1 [10.75]	245,1 [9.65]	200,2 [7.88]
940 [57.4]	286,8 [11.29]	258,8 [10.19]	213,9 [8.42]

VIS 40 Series Two-speed

Dimensions

Standard and Wheel Mount – ISO

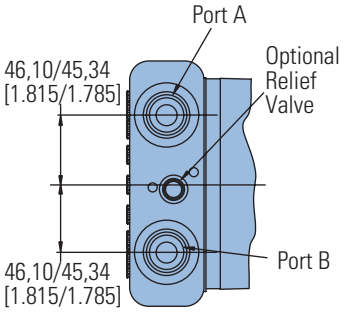

Ports

G 3/4 (BSP) O-ring Ports (2)

G 1/4 (BSP) O-ring Case Drain Port (1)

7/16 -20 UNF -2B SAE O-ring Shift Ports (2)

Standard Rotation Viewed from Shaft End

Port A Pressurized — CW
Port B Pressurized — CCW

Standard Motors (ISO)

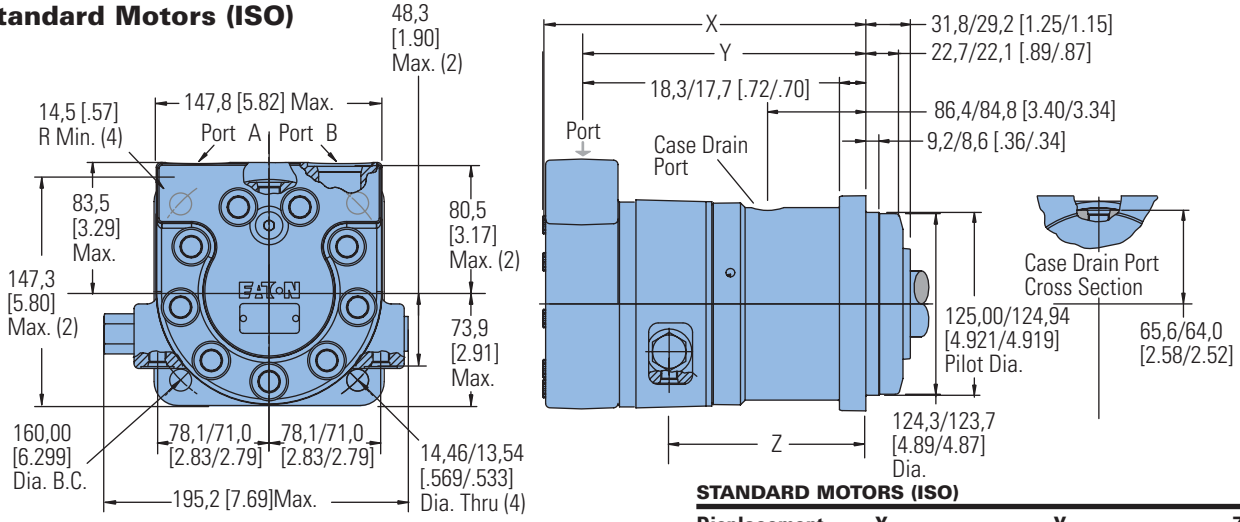

STANDARD MOTORS (ISO)

Displacement cm³/r [in³/r]	X mm [inch]	Y mm [inch]	Z mm [inch]
325 [19.8]	247,4 [9.74]	219,5 [8.64]	174,2 [6.86]
400 [24.4]	253,7 [9.99]	225,8 [8.89]	180,8 [7.12]
505 [30.7]	263,1 [10.36]	235,0 [9.25]	189,7 [7.47]
570 [34.9]	269,2 [10.60]	241,0 [9.49]	196,1 [7.72]
630 [38.5]	274,3 [10.80]	246,4 [9.70]	201,4 [7.93]
685 [41.7]	278,9 [10.98]	251,0 [9.88]	205,7 [8.10]
785 [48.0]	288,0 [11.34]	260,1 [10.24]	215,1 [8.47]
940 [57.4]	301,8 [11.88]	273,8 [10.78]	228,9 [9.01]

Wheel Motors (ISO)

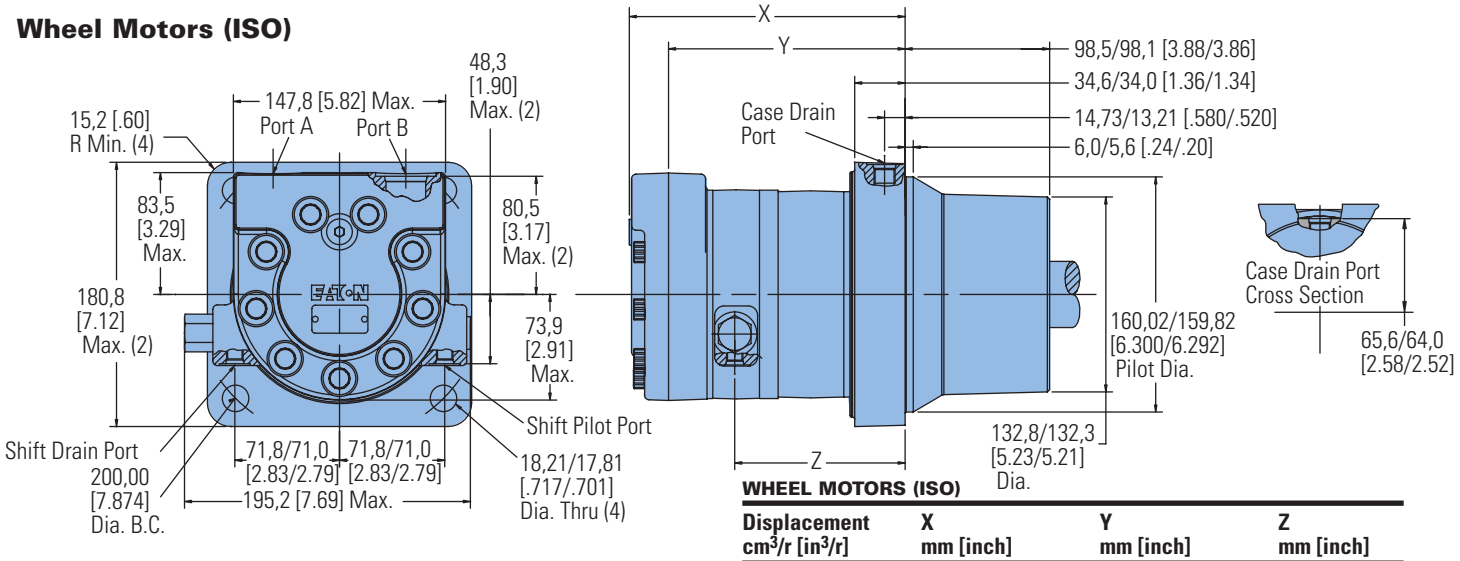

WHEEL MOTORS (ISO)

Displacement cm³/r [in³/r]	X mm [inch]	Y mm [inch]	Z mm [inch]
325 [19.8]	173,2 [6.82]	145,3 [5.72]	100,1 [3.94]
400 [24.4]	179,6 [7.07]	151,6 [5.97]	106,7 [4.20]
505 [30.7]	189,0 [7.44]	160,8 [6.33]	115,6 [4.55]
570 [34.9]	195,1 [7.68]	166,9 [6.57]	121,9 [4.80]
630 [38.5]	200,2 [7.88]	172,2 [6.78]	127,3 [5.01]
685 [41.7]	204,7 [8.06]	176,8 [6.96]	131,6 [5.18]
785 [48.0]	213,9 [8.42]	185,9 [7.32]	141,0 [5.55]
940 [57.4]	227,6 [8.96]	199,6 [7.86]	154,7 [6.09]

VIS 40 Series Two-speed

Dimensions

Bearingless

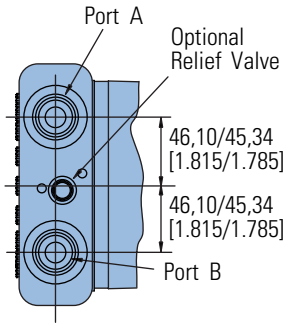

Ports

1–1/16-12 UN-2B SAE O-ring Ports (2)
9/16-18 UNF-2B SAE O-ring Case Drain Port (1)
7/16 -20 UNF -2B SAE O-ring Shift Ports (2)
or G 3/4 (BSP) O-ring Ports (2)
G 1/4 (BSP) O-ring Case Drain Port (1)
7/16 -20 UNF -2B SAE O-ring Shift Ports (2)

Standard Rotation Viewed from Drive End

Port A Pressurized — CW
Port B Pressurized — CCW

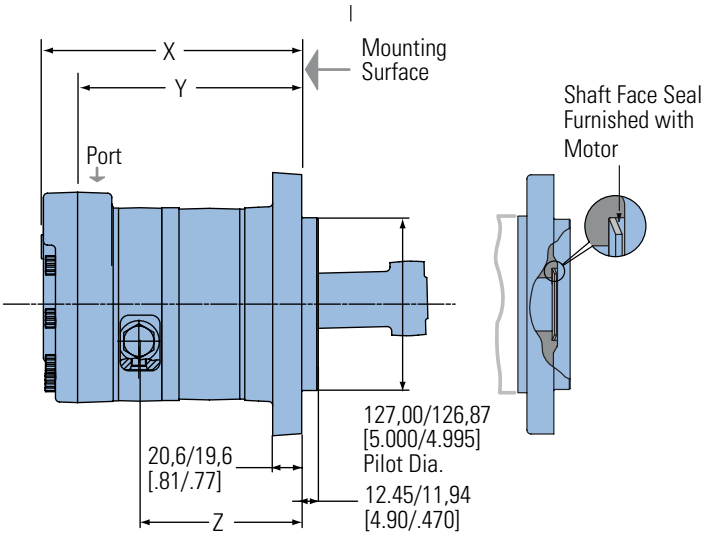

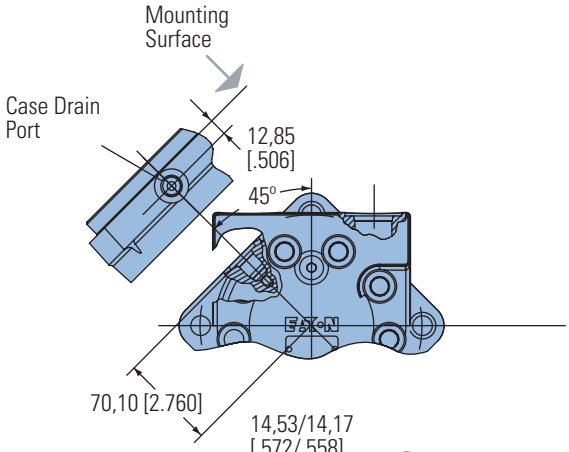

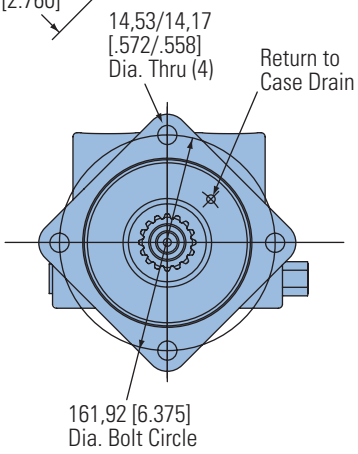

For VIS 40 bearingless motor application information, contact your Eaton representative (mating coupling blanks available from Eaton Hydraulics).

Note:

After machining blank, part must be hardened per Eaton specification.

C	59,94	[2.36] Dia.
D	49,00	[1.93] Dia.
E	155,86	[6.14] Max.
F	150,88	[5.94] Min. Full Form Dia.
G	26,92	[1.06]
H	33,30	[1.21]
J	106,43	[4.19] Full Form Dia.
K	72,64	[2.86]
L	15	

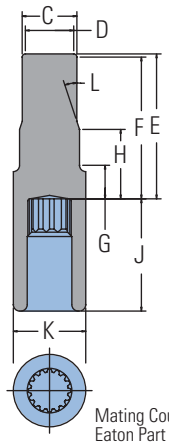

Mating Coupling Blank
Eaton Part No. 13280-002

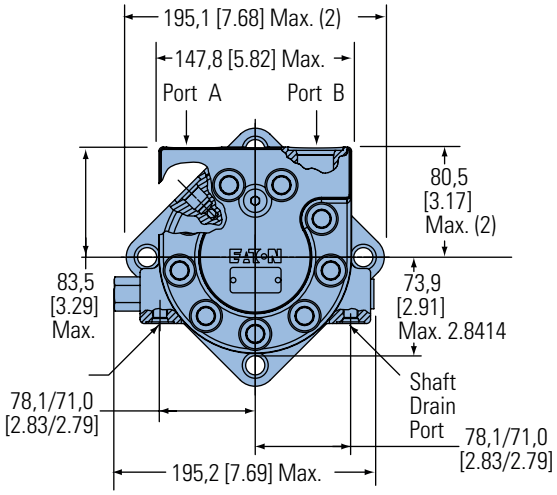

BEARINGLESS MOTORS

Displacement cm³/r [in³/r]	X mm [inch]	Y mm [inch]	Z mm [inch]
325 [19.8]	177,0 [6.97]	149,1 [5.87]	103,9 [4.09]
400 [24.4]	183,6 [7.23]	155,7 [6.13]	110,7 [4.36]
505 [30.7]	193,0 [7.60]	164,8 [6.49]	119,6 [4.71]
570 [34.9]	199,1 [7.84]	170,9 [6.73]	126,0 [4.96]
630 [38.5]	204,0 [8.03]	176,0 [6.93]	131,1 [5.16]
685 [41.7]	208,8 [8.22]	180,8 [7.12]	135,6 [5.34]
785 [48.0]	217,9 [8.58]	190,0 [7.48]	145,0 [5.71]
940 [57.4]	231,6 [9.12]	203,7 [8.02]	158,8 [6.25]

VIS 40 Series Two-speed

Installation Information

Bearingless

1 Internal spline in mating part to be per spline data. Specification material to be ASTM A304, 8620H carburize to a hardness of 60-64 HRc with case depth (to 50HRc) of 0,076 -1,27 [.030 -.050]. Dimensions apply after heat treat.

〈2〉 Mating part to have critical dimensions as shown. Oil holes must be provided and open for proper oil circulation.

〈3〉 Seal to be furnished with motor for proper oil circulation thru splines.

〈4〉 Similar to SAE "C" Four Bolt Flange.

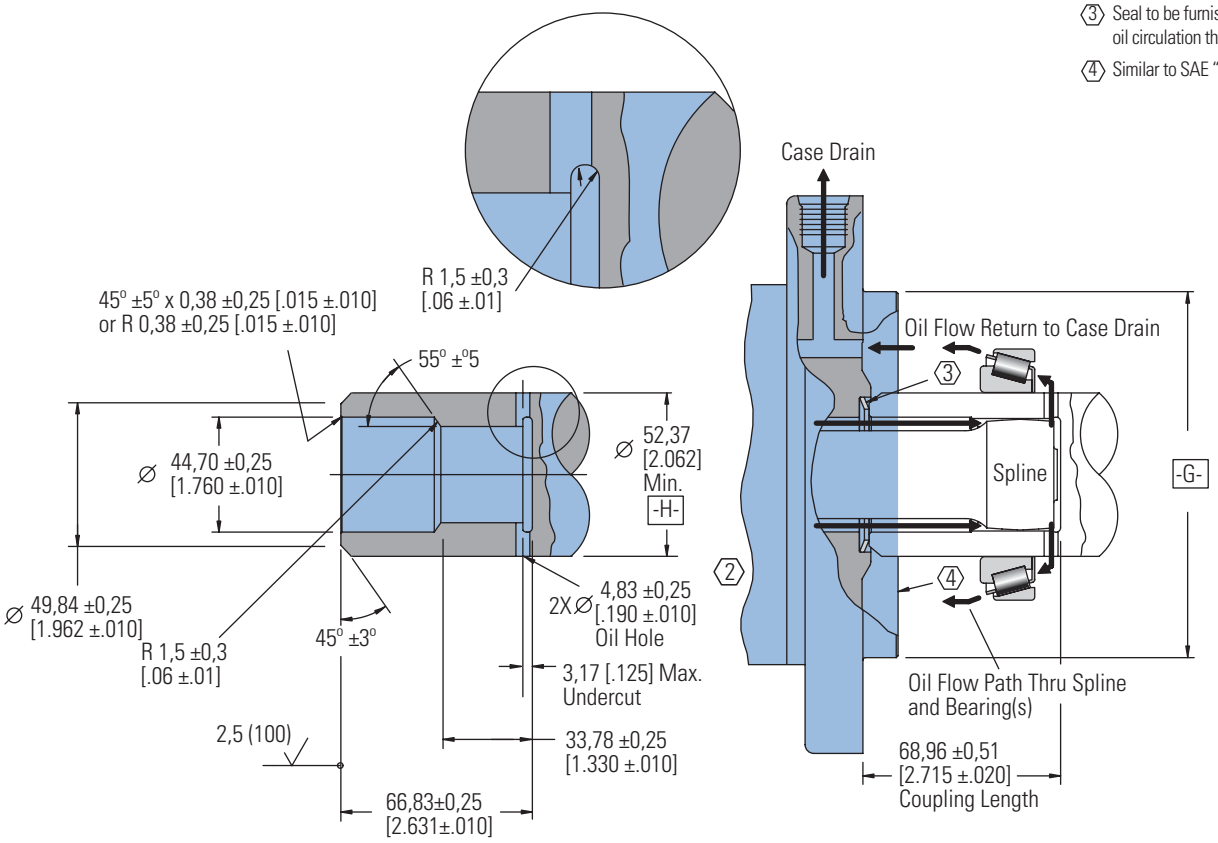

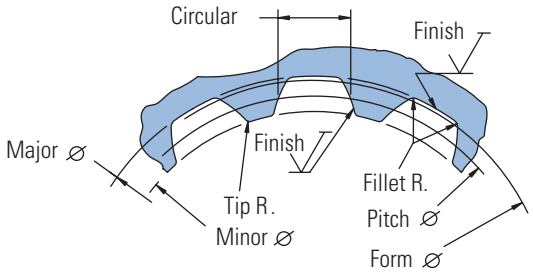

Spline Pitch	10/20
Pressure Angle	30°
Number of teeth	16
Class of Fit	Ref. 5
Type of Fit	Side
Pitch Diameter	Ref. 40,640000 [1.6000000] ◎ 0,20 [.008] | H
Base Diameter	Ref. 35,195272 [1.3856406]
Major Diameter	43,56 [1.715] Max. 43,18 [1.700]
Min. Minor Diameter	36,83 -37,08 [1.450 -1.460]
Form Diameter, Min.	42.47 [1.672]
Fillet Radius	0,64 -0,76 [.025 -.030]
Tip Radius	0,25 -0,51 [.010 -.020]
Finish	1,6 (63)
Involute Profile Variation	+0,000 -0,025 [+.0000 -.0010]
Total Index Variation	0,040 [.0016]
Lead Variation	0,013 [.0005]
Circular Space Width:	
Maximum Actual	4.105 [.1616]
Minimum Effective	3,995 [.1573]
Maximum Effective	Ref. 4,056 [.1597]
Minimum Actual	Ref. 4,081 [.1582]
Dimension Between Two Pins	Ref. 34,272 -34,450 [1.3493 -1.3563]
Pin Diameter	4,389 [.1728]

D-2

VIS 40 Series Two-speed

Product Numbers

Closed Loop

Use digit prefix — 176-, 178-, or 182- plus four digit number from charts for complete product number— Example 176-0022.

Orders will not be accepted without three digit prefix.

SAE

MOUNTING	SHAFT	PORT SIZE	DISPL. $cm^3/r[in^3/r]$ / PRODUCT NUMBER							
			325 [19.8]	400 [24.4]	505 [30.7]	570 [34.9]	630 [38.5]	685 [41.7]	785 [48.0]	940 [57.4]
Standard	40 mm Straight	1 1/16 -12 UNF O-ring (2) 9/16 -18 UNC Drain Port (1)	–	-0106	-0021	-0022	-0023	-0024	-0025	-0026
	1 1/2 inch 17 Tooth Splined	1 1/16 -12 UNF O-ring (2) 9/16 -18 UNC Drain Port (1)	178-0108	-0109	-0027	-0028	-0029	-0030	-0031	-0032
	1 3/4 inch Tapered	1 1/16 -12 UNF O-ring (2) 9/16 -18 UNC Drain Port (1)	–	-0128	-0033	-0034	-0035	-0036	-0037	-0038
Wheel	40 mm Straight	1 1/16 -12 UNF O-ring (2) 9/16 -18 UNC Drain Port (1)	–	–	-0002	-0003	-0004	-0005	-0006	-0007
	1 1/2 inch 17 Tooth Splined	1 1/16 -12 UNF O-ring (2) 9/16 -18 UNC Drain Port (1)	–	–	-0008	-0009	-0010	-0011	-0012	-0013
	1 3/4 inch Tapered	1 1/16 -12 UNF O-ring (2) 9/16 -18 UNC Drain Port (1)	–	182-0041	-0014	-0015	-0016	-0017	-0018	-0019
Bearingless		1 1/16 -12 UNF O-ring (2) 9/16 -18 UNC Drain Port (1)	176-0037	–	-0019	-0020	-0021	-0022	-0023	-0024

176-0022

Oversize

MOUNTING	SHAFT	PORT SIZE	DISPL. $cm^3/r[in^3/r]$ / PRODUCT NUMBER							
			325 [19.8]	400 [24.4]	505 [30.7]	570 [34.9]	630 [38.5]	685 [41.7]	785 [48.0]	940 [57.4]
Standard	40 mm Straight	1 1/16 -12 UNF O-ring (2) 9/16 -18 UNC Drain Port (1)	–	–	178-0039	-0040	–	–	–	–
	46 mm 28 Tooth Splined	1 1/16 -12 UNF O-ring (2) 9/16 -18 UNC Drain Port (1)	–	–	178-0045	-0046	–	–	–	–
	1 3/4 inch Tapered	1 1/16 -12 UNF O-ring (2) 9/16 -18 UNC Drain Port (1)	–	–	178-0051	-0052	–	–	–	–

ISO

MOUNTING	SHAFT	PORT SIZE	DISPL. $cm^3/r[in^3/r]$ / PRODUCT NUMBER							
			325 [19.8]	400 [24.4]	505 [30.7]	570 [34.9]	630 [38.5]	685 [41.7]	785 [48.0]	940 [57.4]
Standard	40 mm Straight	G 3/4 (BSP) (2) G 1/4 (BSP) Drain Port (1)	178-0110	-0111	-0057	-0058	-0059	-0060	-0061	-0062
	45 mm Tapered	G 3/4 (BSP) (2) G 1/4 (BSP) Drain Port (1)	178-0095	–	-0069	-0070	-0071	-0072	-0073	-0074
	1 1/2 inch 17 Tooth Splined	G 3/4 (BSP) (2) G 1/4 (BSP) Drain Port (1)	–	–	-0063	-0064	-0065	-0066	-0067	-0068
Wheel	40 mm Straight	G 3/4 (BSP) (2) G 1/4 (BSP) Drain Port (1)	182-0042	–	-0020	-0021	-0022	-0023	-0024	-0025
	45 mm Tapered	G 3/4 (BSP) (2) G 1/4 (BSP) Drain Port (1)	–	–	-0026	-0027	-0028	-0029	-0030	-0031
	1 1/2 inch 17 Tooth Splined	G 3/4 (BSP) (2) G 1/4 (BSP) Drain Port (1)	–	–	-0032	-0033	-0034	-0035	-0036	-0037
Bearingless		G 3/4 (BSP) (2) G 1/4 (BSP) Drain Port (1)	–	–	-0025	-0026	-0027	-0028	-0029	-0030

176-0028

Note:

The product numbers on this page are for motors used in closed loop circuits. They include a back-pressure relief valve that is set at 4,5 bar [65 PSI].

- A case drain is required for all closed loop VIS motor applications.
- The maximum case pressure for the VIS motor is 3,5 bar [50 PSI].

VIS 40 Series Two-speed

Model Code

The following 16 - digit coding system has been developed to identify all of the configuration options for the VIS 40 two-speed motor. Use this model code to specify a motor with the desired features. All 16 digits of the code must be present when ordering. You may want to photocopy the matrix below to ensure that each number is entered in the correct box.

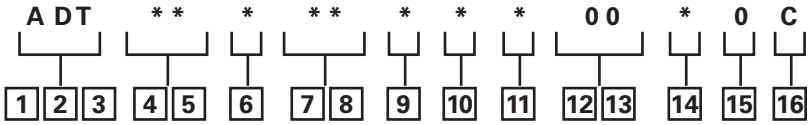

1, 2, 3 Product Series

ADT – VIS 40- Two-speed Motor

4, 5 Displacement – cm³/r [in³/r]

20 – 325 [19.8]

24 – 400 [24.4]

31 – 505 [30.7]

35 – 570 [34.9]

38 – 630 [38.5]

42 – 685 [41.7]

48 – 785 [48.0]

57 – 940 [57.4]

6 Mounting Type

A – 4 Bolt Bearingless 127,00 [5.000] Pilot Dia. with 12,19 [.480] Pilot Length and 14,35 [.565] Dia holes on 161,92 [6.375] Dia. Bolt Circle

B – 4 Bolt Wheel Mount 160,00 [6.3] Pilot Dia. With 5,8 [.23] Pilot Length and 18,00 [.709] Dia. Holes on 200,00 [7.874] Dia. Bolt Circle (ISO Compatible)

C – 4 Bolt Oversize Flange 185,4 [7.30] Rear Pilot Dia., 169,90 [6.689], 139,93 [5.509], 127,0 [5.00] Dia (Front Pilots) and 18,01 [.709] Dia. Holes on 224,00 [8.819] Dia. Bolt Circle

F – 4 Bolt Standard Mount (SAE CC) 127,00 [5.000] Pilot Dia. With 12,2 [.48] Pilot Length and 14,32 [.564] Dia. Holes on 161,92 [6.375] Dia. Bolt Circle

G – 4 Bolt Wheel Mount 139,7 [5.50] Pilot Dia. with 7,9 [.31] Pilot Length and 14,32 [.564] Dia. Holes on 184,15 [7.250] Dia. Bolt Circle (SAE Compatible)

H – 4 Bolt Standard Mount 125,00 [4.92] Pilot Dia. With 8,9 [.35] Pilot Length and 14,00 [.551] Dia. Holes on 160,00 [6.299] Dia. Holes on 160,00 [6.299] Dia. Bolt Circle (ISO Compatible)

M – Standard, 4 Bolt: 169,75 [6.683] Pilot Dia. With 4.3 [.17] Pilot Length and M16 X 2 -6H Threaded Holes on 224,00 [8.819] Dia. Bolt Circle (To be selected for Brake Option)

7, 8 Output Shaft

00 – None (Bearingless)

01 – 45 mm Dia. 10:1 Tapered Shaft Per ISO R775 with M30X2-6H Threaded Shaft End, 12W X 8H X 28L [.472W X .313H X 1.102L] Key

02 – 1-3/4 inch Dia. .125:1 Tapered Shaft Per SAE J501 with 1-1/4 - 18 UNEF-2A Threaded Shaft End, 11,11 [.4375] Square X 31,8 [1.25] Straight Key

04 – 46 mm Dia. Flat Root Side Fit, 28 Tooth, 16/32 DP 30 Degree Involute Spline, 93,0 [3.66] Minimum Ful Spline with M16 X 2,0-6H Thread in End

07 – 40 mm Dia. Straight Shaft with M12 X 1,75-6H Thread in End, 12W X 8H X 63L [.472W X .313H X 2.480L] Key (SAE Compatible)

08 – 1-1/2 inch Dia. Flat Root Side Fit, 17 Tooth, 12/24 DP 30 Degree Involute Spline, 39,1 [1.54] Minimum Full Spline with 3/8-16 UNC-2B Thread in End (SAE Compatible)

09 – 1-1/2 inch Dia. Flat Root Side Fit, 17 Tooth, 12/24 DP 30 Degree Involute Spline, 56,6 [2.23] Minimum Full Spline with M12 X 1.75-6H Thread in End (ISO Compatible)

10 – 40 mm Dia. Straight Shaft with M12 X 1,75-6H Thread in End, 12W X 8H X 67L [.472W X .313H X 2.630L] Key (ISO Compatible)

9 Ports

A – 1–1/16-12 UN-2B Size 12 O-ring Port, Accepts Fittings for SAE J1926

B – G 3/4 (BSP) Straight Thread Port

10 Case Flow Options

A – Shuttle Valve with 9/16-18 UNF-2B, Size 6 O-ring Port Case Drain, Accepts Fittings for SAE J1926

B – Shuttle Valve with G 1/4 (BSP) Straight Thread Port Case Drain

11 Back-Pressure Relief

1 – Set at 4,5 bar [65 PSI] (for Manual Pumps)

2 – Set at 15,2 bar [220 PSI] (for Servo Pumps)

4 – Set at 15,2 bar [300 PSI] (for high charge Servo Pumps)

12, 13 Special Features

00 – None

08 – Spring Applied Hydraulic Release Wet Brake With Brake Capacity of 20,000 lbf-in Static and 150 lbf/in^2 release pressure

14 _ Paint/ Special Packaging

0 – Primer, Individual Box

A – Low Gloss Black Primer, Individual Box

B – No Paint, Bulk Box Option

C – Low Gloss Black Primer, Bulk Box Option

15 _ Eaton Assigned Code when Applicable

0 – Assigned Code

16 _ Eaton Assigned Design Code

C – Assigned Design Code

VIS 40 Series

Brake Description

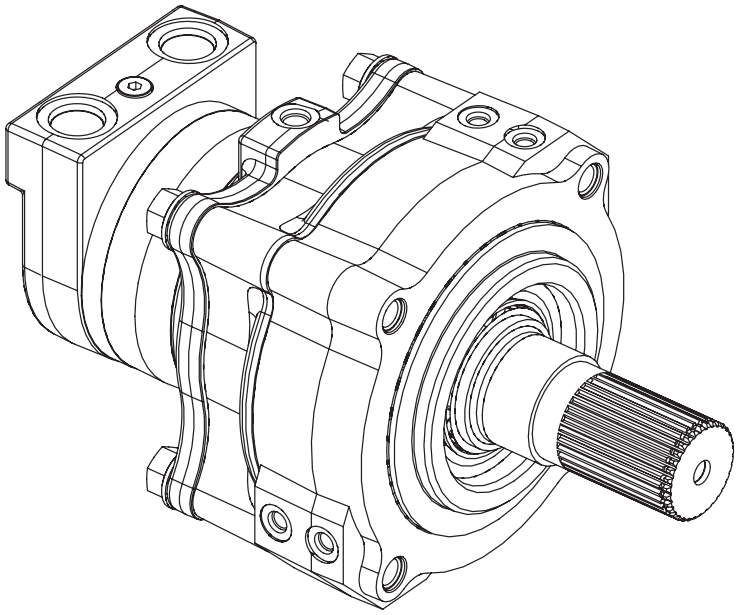

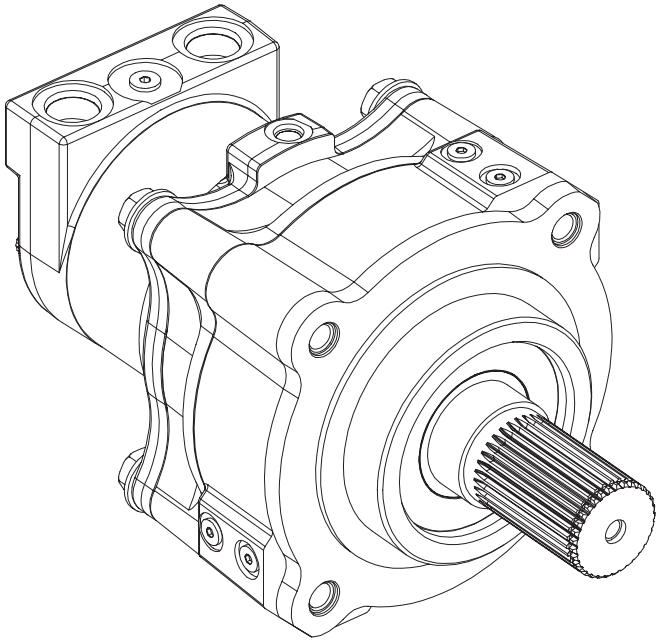

Brake Motor WITH Outer Grease Seal

Features

- Spring-Applied/ Hydraulically Released Multi-Disc Brake
- Spring automatically applies brake when hydrostatic pressure is absent
- Environmentally Protected
- Integral Design – Motor and brake as a single package to minimize length and cost.
- Infinite Braking – Eliminates machine creep associated with park pawl mechanisms
- Boost Feature – Increases holding capacity to match full motor output torque
- No adjustments needed
- Two Sets of Release and Boost Ports – Allows for multiple plumbing options and facilitates bleeding
- Outer Grease Seal - optional feature that encloses the front bearing protecting it from external contamination

Applications

- Skid Steer Loaders
- Mini Excavators
- Trenchers
- Road Rollers
- Anywhere load-holding is needed on a Low-Speed High-Torque drive system

Specifications

- Static Holding Torque – 780 N-m [6900 lb-in] minimum (spring only - no boost)
  2621 N-m [23200 lb-in] minimum (@ 10,3 bar [150 PSI] boost)
  3570 N-m [31600 lb-in] minimum (@ 15,2 bar [220 PSI] boost)
- Release Pressure – 10,3 bar [150 PSI] minimum for full release
  68,9 bar [1000 PSI] maximum allowed at release port
- Case Pressure – 1,4 bar [20 PSI] continuous
  3,5 bar [50 PSI] maximum
- Boost Pressure – 15,2 bar [220 PSI] continuous
  34,5 bar [500 PSI] maximum
- Speed – 360 RPM maximum
- Emergency – After 3 consecutive stops, brake to still meet parking requirement

Model Code Selection:

To add a brake to the motor, select Mounting Option 'M' from Mounting Options and select Brake Option from Special Features.

VIS 40 Series

Brake Dimensions

Ports

7/16-20 UNF-2B SAE O-Ring Release Port (2)
G 1/4 (BSP) Release Port (2)
7/16-20 UNF-2B SAE O-ring Boost Port (2)
G 1/4 (BSP) Release Port (2)
9/16-18 UNF-2B SAE O-ring Case Drain Port (1)
G 1/4 (BSP) O-ring Case Drain Port

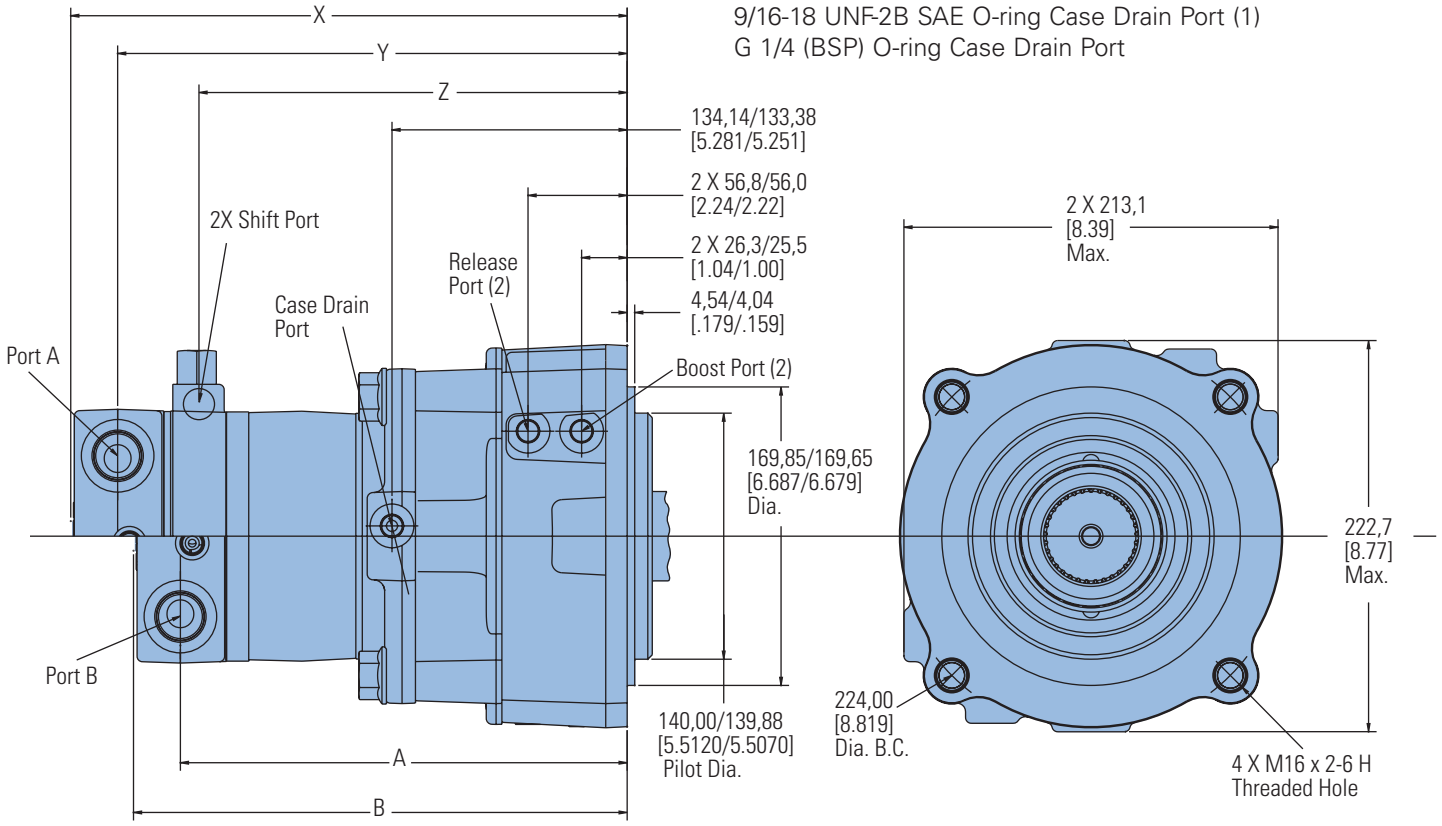

BRAKE MOTORS (SINGLE-SPEED)

Displacement cm³/r [in³/r]	A mm [inch]	B mm [inch]
325 [19.8]	220,9 [8.78]	250,2 [9.85]
400 [24.4]	229,7 [9.05]	256,9 [10.11]
505 [30.7]	238,7 [9.40]	265,9 [10.47]
570 [34.9]	244,9 [9.64]	272,1 [10.71]
630 [38.5]	250,1 [9.85]	277,3 [10.92]
685 [41.7]	254,7 [10.04]	281,9 [11.10]
785 [48.0]	264,0 [10.40]	291,2 [11.46]
940 [57.4]	277,7 [10.94]	304,9 [12.00]

BRAKE MOTORS (TWO-SPEED)

Displacement cm³/r [in³/r]	X mm [inch]	Y mm [inch]	Z mm [inch]
325 [19.8]	286,1 [11.26]	258,9 [10.20]	213,5 [8.41]
400 [24.4]	292,7 [11.52]	265,7 [10.46]	220,3 [8.67]
505 [30.7]	301,9 [11.88]	274,7 [10.82]	229,3 [9.03]
570 [34.9]	308,0 [12.12]	280,9 [11.06]	235,5 [9.27]
630 [38.5]	313,1 [12.32]	285,9 [11.27]	238,5 [9.27]
685 [41.7]	317,9 [12.52]	290,7 [11.45]	245,3 [9.66]
785 [48.0]	327,0 [12.88]	300,0 [11.80]	254,6 [10.02]
940 [57.4]	340,7 [13.42]	313,7 [12.35]	268,3 [10.56]

VIS 40 Series

Brake Shaft Dimensions/ Sideload Curves

Standard Brake

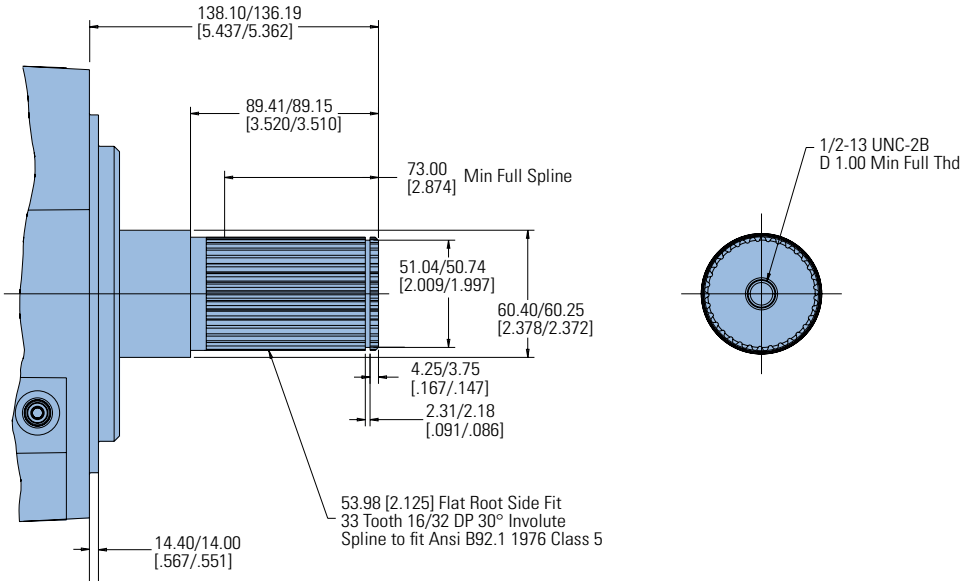

Brake with Outer Grease Seal

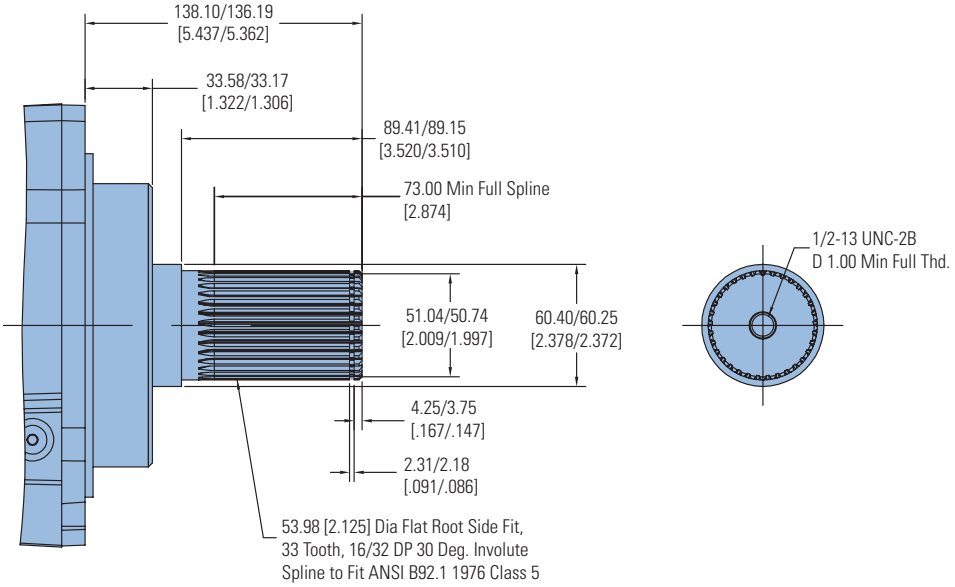

Standard Mount

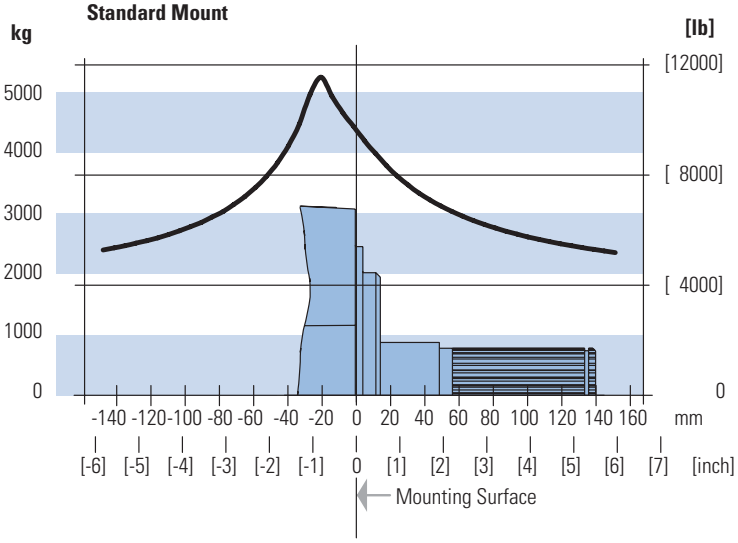

VIS 45 Series

Highlights

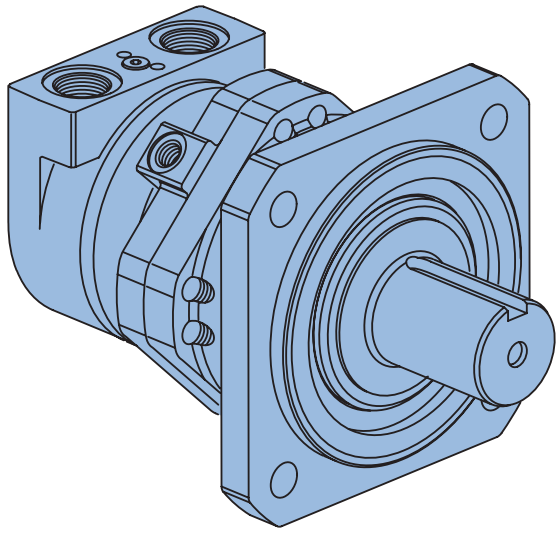

Description

The VIS 45 is the most powerful motor in the VIS Series product line. Maximum continuous output torque capability is rated to 4520 Nm [40,000 lb-in.] with a displacement range from 630cc to 1560cc per revolution. VIS 45 motors can be run up to 170 LPM [45 GPM] with pressure capability up to 310 bar [4500 PSI]. The motor utilizes patented VIS technology with improved high-strength Geroler, optimized drive geometry, and two-piece pre-loaded balance plate for increased starting efficiency, reduced leakage and higher back pressure capacity.

VIS 45 Motors

Geroler Element	5 Displacements
Flow l/min [GPM]	170 [45] Continuous
	189 [50] Intermittent
Speed	Up to 284 RPM
Pressure bar [PSI]	310 [4500] Cont.
	345 [5000] Inter.
	380 [5500] Peak
Torque Nm [lb - in]	4520 [40000] Cont.
	5650 [50000] Inter.

Features

- Patented VIS Geroler technology
- Three moving components: (Geroler, star, drive, and output shaft)
- Two-piece pre-loaded pressure balance plate
- Variety of optional features including two-speed option, and case flow solutions for both closed-loop and open-loop applications.

Benefits

- Extremely compact powerful package
- Increased torque capability
- Greatest horsepower density in the VIS motor line
- High efficiency
- Quiet, smooth operation
- Reliable performance
- Design Flexibility

Applications

- Traction Drives
- Skid Steer loaders
- Grapples
- Excavator Swing Drives
- Marine & Military Winches
- Utility Reels
- Harvesters
- Snow Grooming Equipment
- Trenchers
- Piggy-back Forklifts
- Industrial Machine Tools
- Truck Grapples
- Wood Processing – Saw Mills
- Augers



Auger



Skid Steer

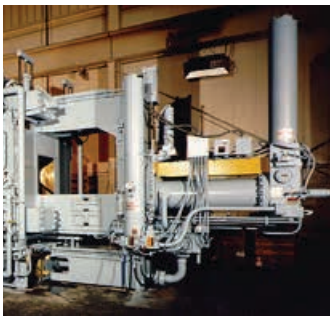

Injector



Port Equipment

VIS 45 Series

Specifications

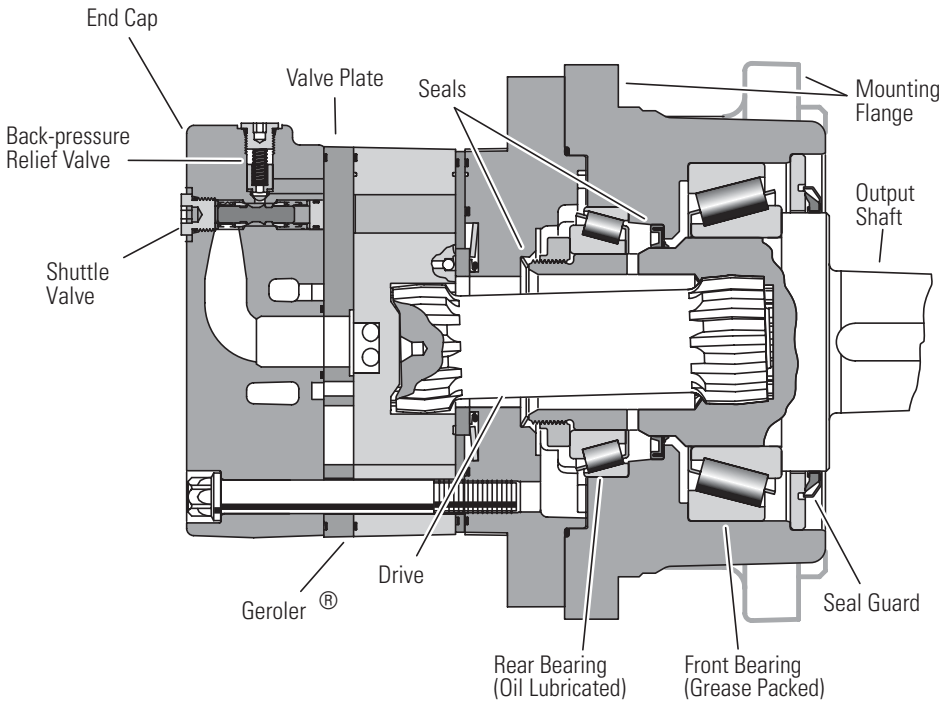

SPECIFICATION DATA — VIS 45 SERIES MOTORS

Displ. cm3/r [in3/r]		630 [38.6]	805 [48.6]	990 [60.5]	1245 [76.0]	1560 [95.0]
Max. Speed (RPM) @ Flow	Continuous	256	198	164	129	104
	Intermittent	284	220	183	143	115
Flow l/min [GPM]	Continuous	170 [45]	170 [45]	170 [45]	170 [45]	170 [45]
	Intermittent	189 [50]	189 [50]	189 [50]	189 [50]	189 [50]
Torque Nm [lb-in]	Continuous	2963 [26080]	3555 [31460]	4052 [35860]	4520 [40000]	4520 [40000]
	Intermittent	3111 [27530]	3722 [32940]	4549 [40269]	5376 [47592]	5650 [50000]
Pressure Δ bar [Δ PSI]	Continuous	310 [4500]	310 [4500]	258 [3740]	205 [2975]	164 [2380]
	Intermittent	345 [5000]	345 [5000]	322 [4675]	256 [3720]	205 [2975]
	Peak	379 [5500]	379 [5500]	379 [5500]	308 [4465]	246 [3570]
Weight kg [lb]	Standard or Wheel Mount	53,8 [118.7]	55,2 [121.6]	56,7 [125.0]	58,7 [129.4]	61,2 [134.9]
	Bearingless	28,3 [62.3]	29,6 [65.2]	31,1 [68.6]	33,1 [73.0]	35,6 [78.5]
Weight kg [lb]	Two-speed Standard or Wheel Mount	58,5 [128.9]	59,8 [131.8]	61,3 [135.2]	63,3 [139.6]	65,8 [145.1]
	Two-speed Bearingless	32,9 [72.5]	34,2 [75.4]	35,7 [78.8]	37,7 [83.2]	40,2 [88.7]

A simultaneous maximum torque and maximum speed NOT recommended.

Note:

To assure best motor life, run motor for approximately one hour at 30% of rated pressure before application to full load. Be sure motor is filled with fluid prior to any load applications.

Maximum Inlet Pressure:

400 bar [5800 PSI]

Do Not Exceed A Pressure Rating (for displacement size see chart above).

Return Pressure (Back-Pressure):

Minimum – 3,5 bar [50 PSI]
Maximum – 21 bar [300 PSI]

Note:

Return (back-pressure) must be 3,5 bar [50 PSI] greater than the case pressure, except with open loop circuit.

Δ Pressure:

The true Δ bar [Δ PSI] between inlet port and outlet port

Case Pressure:

Minimum – No Pressure

Maximum – 3,5 bar [50 PSI]

Note:

The case must be full when the motor is operating. A case drain is recommended.

Continuous Rating:

Motor may be run continuously at these ratings

Intermittent Operation:

10% of every minute

Peak Operation:

1% of every minute

Recommended Fluids:

Premium quality, anti-wear type hydraulic oil with a viscosity of not less than 70 SUS at operating temperature.

Recommended System Operating Temp.:

-34°C to 82°C [-30°F to 180°F]

Recommended Filtration:

Per ISO Cleanliness Code, 4406: 20/18/13

Shuttle:

Standard

Back-Pressure Relief Valve:

Required for closed loop circuit.

VIS 45 Series

Performance Data

Motors run with high efficiency in all areas designated with a number for torque and speed. For best motor life select a motor to run with a torque and speed range shown in the light shaded area.

Performance data is typical at 120 SUS. Actual data may vary slightly from unit to unit in production.

Continuous

Intermittent

630 cm³/r [38.6 in³/r]

□ Pressure Bar [PSI]

Flow LPM [GPM]

	250	500	1000	1500	2000	2500	3000	3500	4000	4500	5000
	15	35	70	105	140	170	205	240	275	310	345
4	1270	2710	5530	8250	10300	12900	15540	17720	20820	23640	25740
	144	306	625	932	1164	1458	1756	2002	2353	2671	2909
15	23	23	23	22	22	21	20	19	18	17	15
8	1290	2720	5580	8290	10490	13110	15760	18070	21000	24100	26070
	146	307	631	937	1185	1481	1781	2042	2373	2723	2946
30	47	45	45	45	45	44	43	41	38	36	34
12	1310	2670	5440	8320	10820	13400	16370	18970	21230	24540	26840
	148	302	615	940	1223	1514	1850	2144	2399	2773	3033
45	71	68	68	67	67	66	64	62	61	58	54
16	1320	2600	5400	8250	10910	13730	16780	19710	21970	24870	27530
	149	294	610	932	1233	1551	1896	2227	2483	2810	3111
61	95	91	91	89	89	88	85	83	81	77	72
20	1290	2500	5270	8020	10690	13400	16730	20020	22320	25420	
	146	283	596	906	1208	1514	1890	2262	2522	2872	
76	119	114	114	113	113	111	108	104	103	97	
24	1240	2440	5200	7920	10560	13430	16700	19970	22610	25730	
	140	276	588	895	1193	1518	1887	2257	2555	2907	
91	143	137	137	135	135	133	129	125	123	117	
28		2190	5050	7870	10520	13480	16660	19860	22450	26080	
		247	571	889	1189	1523	1883	2244	2537	2963	
106		160	160	157	157	155	150	146	143	136	
32		2110	4870	7720	10300	13230	16370	19720	22320	25986	
		238	550	872	1164	1495	1850	2228	2522	2936	
121		182	182	180	180	177	172	166	164	156	
36		2090	4550	7330	10030	12890	15960	19220	22040	25655	
		236	514	828	1133	1457	1803	2172	2491	2898	
136		205	205	202	202	199	193	187	184	175	
40			4150	7120	9760	12490	15560	18820	21600	25185	
			469	805	1103	1411	1758	2127	2441	2845	
151			228	224	224	221	214	208	204	194	
45			3970	6930	9500	12230	15340	18470	21207	24742	
			449	783	1074	1382	1733	2087	2396	2795	
170			256	252	252	249	241	234	229	218	
50			3680	6660	9270	11920	15150	18300			
			416	753	1048	1347	1712	2068			
189			284	280	280	276	268	259			

[9270] Torque [lb-in]
1048 Nm
280 Speed RPM

805 cm³/r [48.6 in³/r]

□ Pressure Bar [PSI]

Flow LPM [GPM]

	250	500	1000	1500	2000	2500	3000	3500	4000	4500	5000
	15	35	70	105	140	170	205	240	275	310	345
4	1600	3350	7180	10670	13480	16640	19680	21740	25860	28500	31720
	181	379	811	1206	1523	1880	2224	2457	2922	3221	3584
15	19	18	17	17	17	17	16	15	14	13	12
8	1620	3380	7240	10730	13740	16920	19950	22160	25920	28970	32200
	183	382	818	1212	1553	1912	2254	2504	2929	3274	3639
30	38	36	35	34	34	34	34	34	32	31	29
12	1640	3310	7180	10770	14170	17290	20730	23270	26340	29420	32470
	185	374	811	1217	1601	1954	2342	2630	2976	3324	3669
45	56	55	52	52	51	51	50	50	49	47	45
16	1660	3220	7010	10680	14290	17710	21240	24170	26830	30340	32940
	188	364	792	1207	1615	2001	2400	2731	3032	3428	3722
61	76	74	71	70	69	69	68	68	67	64	60
20	1600	3110	6840	10380	14000	17290	20990	24490	27270	31390	
	181	351	773	1173	1582	1954	2372	2767	3082	3547	
76	95	92	88	87	86	86	85	85	84	80	
24	1560	3030	6750	10250	13830	17340	21110	24450	27620	31460	
	176	342	763	1158	1563	1959	2385	2763	3121	3555	
91	114	110	105	104	103	103	102	102	101	96	
28		2720	6560	10190	13780	17390	21090	24360	27420	31238	
		307	741	1151	1557	1965	2383	2753	3098	3529	
106		128	123	121	120	120	119	119	117	111	
32		2620	6330	10000	13480	17070	20730	24180	27270	31064	
		296	715	1130	1523	1929	2342	2732	3082	3509	
121		147	140	139	137	137	135	135	134	127	
36		2620	5910	9480	13140	16640	20200	23570	26910	30646	
		296	668	1071	1485	1880	2283	2663	3041	3462	
136		165	158	156	154	154	152	152	150	143	
40			5390	9220	12790	16120	19700	23080	26343	30019	
			609	1042	1445	1822	2226	2608	2976	3391	
151			175	173	171	171	169	169	167	159	
45			5150	8970	12450	15780	19420	22650	25848	29462	
			582	1014	1407	1783	2194	2559	2920	3328	
170			198	196	193	193	191	191	189	179	
50			4770	8610	12140	15380	19180	22440			
			539	973	1372	1738	2167	2536			
189			220	217	215	215	212	212			

D-2

VIS 45 Series

Performance Data

Motors run with high efficiency in all areas designated with a number for torque and speed. For best motor life select a motor to run with a torque and speed range shown in the light shaded area.

Performance data is typical at 120 SUS. Actual data may vary slightly from unit to unit in production.

Continuous

Intermittent

1245 cm³/r [76.0 in³/r]

□ Pressure Bar [PSI]

Flow LPM [GPM]

	250 15	500 35	1000 70	1500 105	2000 140	2500 170	3000 205	3500 240	4000 275	4250 295
4	2160	4800	9960	15150	20200	26450	30670	39180	42800	43220
	244	542	1125	1712	2283	2989	3466	4427	4836	4884
15	12	11	11	11	11	10	10	9	9	9
8	2250	4830	10370	15760	22010	27180	33330	39840	43660	44400
	254	546	1172	1781	2487	3071	3766	4502	4934	5017
30	24	23	22	22	21	20	20	19	19	19
12	2400	5390	10910	17290	22780	28470	34170	40140	44160	47220
	271	609	1233	1954	2574	3217	3861	4536	4990	5336
45	36	33	33	32	32	32	32	31	31	30
16	2410	5150	10930	16970	22880	28600	33900	39500	44510	47592
	272	582	1235	1918	2585	3232	3831	4464	5030	5376
61	48	46	45	44	43	43	43	42	41	40
20	2350	4890	10650	16470	21960	27450	33130	37710	43890	46933
	266	553	1203	1861	2481	3102	3744	4261	4960	5302
76	60	59	57	56	56	56	55	55	54	52
24	2190	4760	10460	15920	21230	26530	32320	37680	42670	45673
	247	538	1182	1799	2399	2998	3652	4258	4822	5156
91	72	70	68	67	67	67	66	66	65	63
28	1990	4260	10070	15860	21200	26420	32480	37500	42464	45418
	225	481	1138	1792	2396	2985	3670	4238	4797	5131
106	85	82	80	78	78	78	77	77	76	74
32		4100	9770	15410	20770	26300	31920	37240	42167	45103
		463	1104	1741	2347	2972	3607	4208	4764	5095
121		94	91	90	89	89	88	88	87	84
36		4090	9060	14650	20060	25670	31110	36295	41087	43955
		462	1024	1655	2267	2901	3515	4100	4642	4966
136		106	103	101	101	100	99	99	98	95
40			8300	14150	19570	24900	30320	35373	40034	42836
			938	1599	2211	2814	3426	3996	4523	4839
151			114	113	112	111	110	110	108	105
45			8100	13970	19310	24610	29972	34967	39570	42343
			915	1579	2182	2781	3686	3950	4470	4783
170			129	127	126	125	124	124	122	118
50			7900	13790	19050	24310				
			893	1558	2153	2747				
189			143	141	140	139				

990 cm³/r [60.5 in³/r]

□ Pressure Bar [PSI]

Flow LPM [GPM]

	250 15	500 35	1000 70	1500 105	2000 140	2500 170	3000 205	3500 240	4000 275	4500 310	4750 330
4	2000	4100	8630	12620	16050	20080	24150	28320	32590	35150	37040
	226	463	975	1426	1814	2269	2729	3200	3683	3972	4186
15	15	15	15	15	14	14	14	13	12	11	10
8	2020	4130	8700	12740	16350	20420	24480	28400	32850	35670	37250
	228	467	983	1440	1848	2307	2766	3209	3712	4031	4209
30	30	30	29	29	29	28	28	27	25	25	24
12	2050	4050	8630	12780	16870	20860	25440	28550	32920	35860	37630
	232	458	975	1444	1906	2357	2875	3226	3720	4052	4252
45	45	45	44	44	43	43	41	41	41	40	39
16	2070	3940	8420	12680	17010	21380	26070	29660	33020	36620	38439
	234	445	951	1433	1922	2416	2946	3352	3731	4138	4342
61	61	60	58	58	58	57	55	55	54	53	52
20	2000	3800	8220	12330	16660	20860	25760	30060	33550	37880	39766
	226	429	929	1393	1883	2357	2911	3397	3791	4280	4492
76	76	75	73	73	72	71	69	69	68	66	64
24	1950	3700	8120	12180	16460	20890	25820	30090	33990	38366	40269
	220	418	918	1376	1860	2361	2918	3400	3841	4334	4549
91	91	90	88	88	86	85	83	83	82	80	78
28		3320	7880	12100	16400	20990	25890	29900	33750	39106	39995
		375	890	1367	1853	2372	2926	3379	3814	4280	4518
106		105	102	102	101	99	97	97	95	92	90
32		3210	7610	11870	16050	20600	25440	29680	33550	37890	39766
		363	860	1341	1814	2328	2875	3354	3791	4280	4492
121		120	117	117	115	114	110	110	109	106	103
36		3200	7100	11260	15640	20080	24800	28930	32716	36936	38759
		362	802	1272	1767	2269	2802	3269	3696	4173	4379
136		135	131	131	130	128	124	124	123	119	116
40			6480	10950	15220	19460	24170	28330	32023	36155	37935
			732	1237	1720	2199	2731	3201	3618	4084	4286
151			146	146	144	142	138	138	137	133	130
45			6190	10650	14810	19040	23830	27952	31599	35679	37432
			699	1203	1674	2152	2693	3158	3570	4031	4229
170			164	164	162	160	155	155	154	149	145
50			5740	10230	14450	18570	23540				
			649	1156	1633	2098	2660				
189			183	183	180	178	173				

[18570] Torque [lb-in]
2098 } Nm
178 Speed RPM

VIS 45 Series

Performance Data

Motors run with high efficiency in all areas designated with a number for torque and speed. For best motor life select a motor to run with a torque and speed range shown in the light shaded area.

Performance data is typical at 120 SUS. Actual data may vary slightly from unit to unit in production.

Continuous

Intermittent

1560 cm³/r [95.0 in³/r]

□ Pressure Bar [PSI]

Flow LPM [GPM]

	250 15	500 35	1000 70	1500 105	2000 140	2500 170	3000 205	3500 240	4000 275
4 15	2700 305 9	5670 641 9	11910 1346 9	18520 2093 9	24910 2815 9	30860 3487 8	37610 4250 8	42320 4782 8	48366 5464 8
8 30	2810 318 19	5910 668 19	12400 1401 18	19260 2176 18	25590 2892 18	31740 3587 17	39310 4442 16	44150 4989 15	50457 5700 15
12 45	3010 340 29	6300 712 28	13040 1474 28	20490 2315 27	26600 3006 26	33070 3737 25	39880 4506 23	46670 5274 22	53337 6025 22
16 61	3020 341 38	6300 712 38	13360 1510 37	20740 2344 36	27270 3082 35	33950 3836 34	40450 4571 31	48630 5495 29	55577 6279 29
20 76	2930 331 48	6150 695 47	13200 1492 46	20490 2315 45	27110 3063 44	34830 3936 42	39820 4500 39	47662 5384 37	54470 6154 37
24 91	2780 314 58	5910 668 56	12880 1455 55	19750 2232 54	26930 3043 53	34390 3886 50	39310 4442 47	47300 5343 44	54057 6107 44
28 106		5310 600 66	12500 1413 64	19630 2218 63	26600 3006 62	33950 3836 59	38740 4378 55	46635 5268 52	53297 6021 52
32 121		5120 579 75	12070 1364 74	19260 2176 72	26260 2967 70	33510 3787 67	38180 4314 62	45982 5195 58	52550 5937 58
36 136		5100 576 85	11270 1274 83	18270 2065 81	25590 2892 79	33070 3737 76	37652 4254 70	45366 5125 66	
40 151			10280 1162 92	17760 2007 90	24910 2815 88	32630 3687 84	37124 4194 78	44750 5055 73	
45 170			9820 1110 104	17280 1953 101	24240 2739 99	31793 3592 95	36119 4080 87	43577 4923 82	
50 189			9100 1028 115	16600 1876 113	23650 2672 110				

16600 } Torque [lb-in]
1876 Nm
113 Speed RPM

VIS 45 Series

Dimensions

Standard Mount

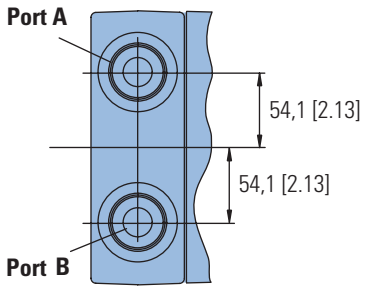

Ports

1–5/16-12 UN-2B SAE O-ring Ports (2)

9/16-18 UNF-2B SAE O-ring Case Drain Port (1)

Or G 1 (BSP) O-ring Ports (2)

G 1/4 (BSP) O-ring Case Drain Port (1)

Standard Rotation Viewed from Shaft End

Port A Pressurized — CW

Port B Pressurized — CCW

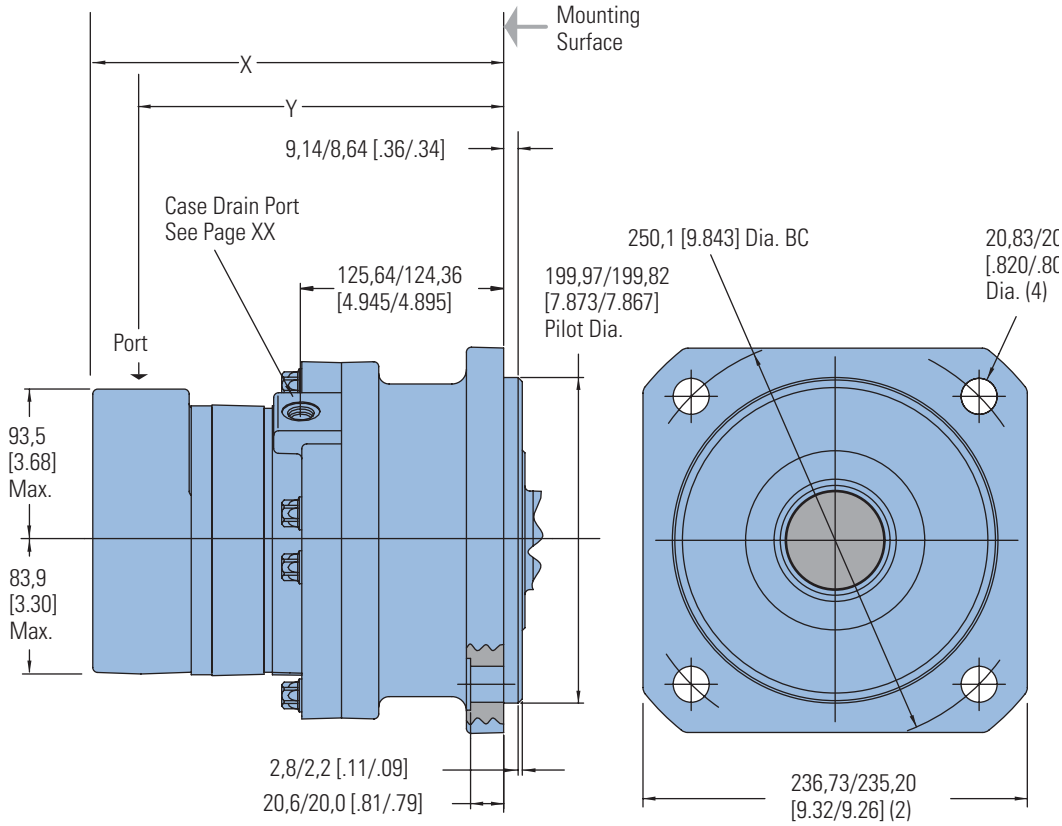

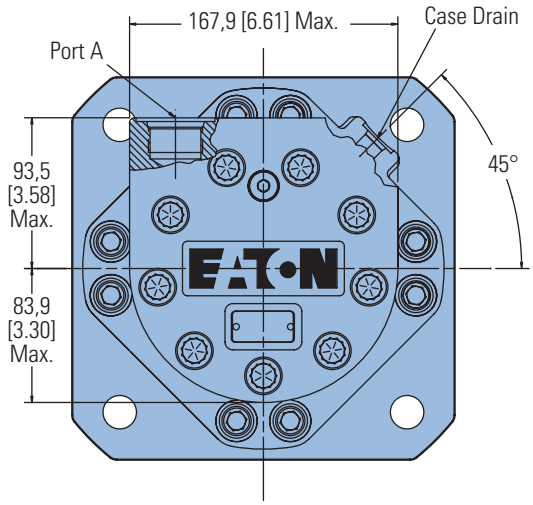

STANDARD MOTORS

Displacement cm³/r [in³/r]	X Max. mm [inch]	Y mm [inch]
630 [38.6]	260,9 [10.27]	228,6 [9.00]
805 [48.6]	271,3 [10.68]	239,0 [9.41]
990 [60.5]	283,7 [11.17]	251,5 [9.90]
1245 [76.0]	299,7 [11.80]	267,7 [10.54]
1560 [95.0]	319,5 [12.58]	287,5 [11.32]

VIS 45 Series

Dimensions

Wheel Mount

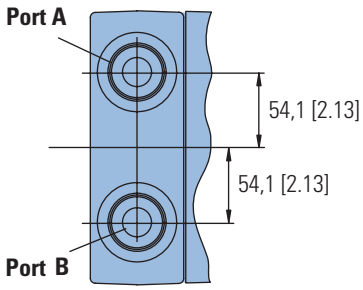

Ports

1–5/16-12 UN-2B SAE O-ring Ports (2)

9/16-18 UNF-2B SAE O-ring Case Drain Port (1)

Or G 1 (BSP) O-ring Ports (2)

G 1/4 (BSP) O-ring Case Drain Port (1)

Standard Rotation Viewed from Shaft End

Port A Pressurized — CW

Port B Pressurized — CCW

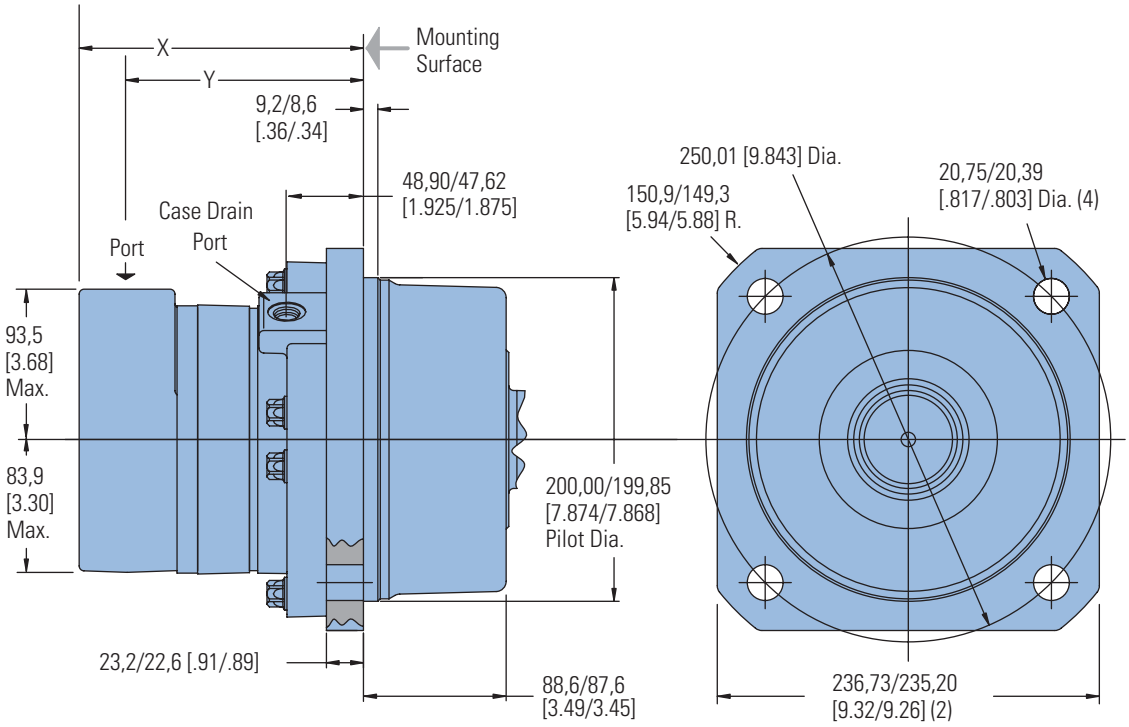

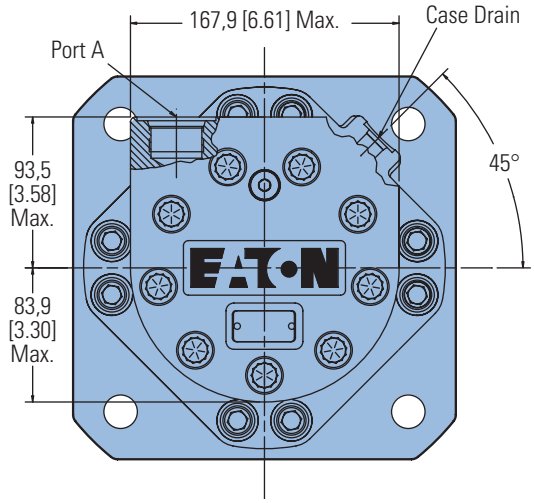

WHEEL MOTORS

Displacement cm³/r [in³/r]	X Max. mm [inch]	Y mm [inch]
630 [38.6]	184,2 [7.25]	151,9 [5.98]
805 [48.6]	194,6 [7.66]	162,3 [6.39]
990 [60.5]	207,0 [8.15]	174,8 [6.88]
1245 [76.0]	223,0 [8.78]	191,0 [7.52]
1560 [95.0]	242,8 [9.56]	210,8 [8.30]

VIS 45 Series

Dimensions

Bearingless

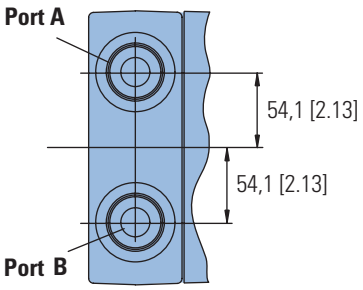

Ports

1–5/16-12 UN-2B SAE O-ring Ports (2)

9/16-18 UNF-2B SAE O-ring Case Drain Port (1)

Or G 1 (BSP) O-ring Ports (2)

G 1/4 (BSP) O-ring Case Drain Port (1)

Standard Rotation Viewed from Drive End

Port A Pressurized — CW

Port B Pressurized — CCW

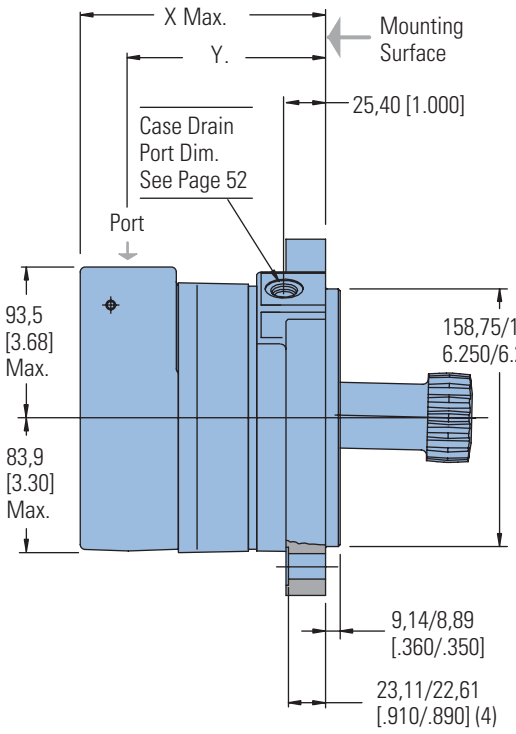

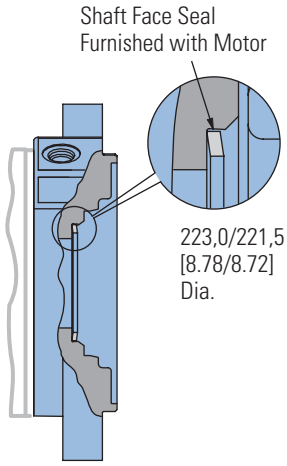

For VIS 45 bearingless motor application information, contact your Eaton representative (mating coupling blanks available from Eaton Hydraulics).

Note:

After machining blank, part must be hardened per Eaton specification.

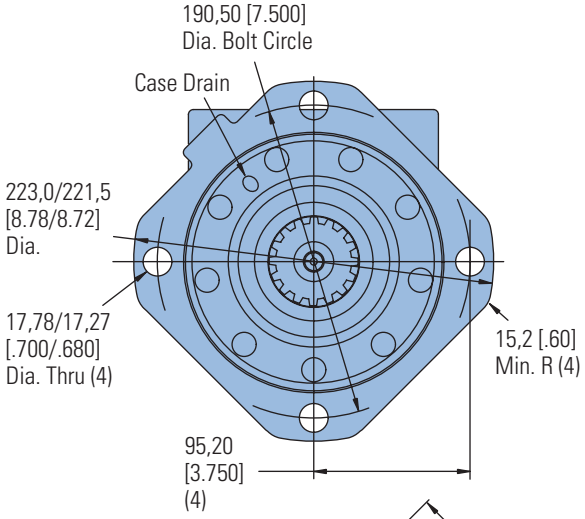

Mating Coupling Blank
Eaton Part No. 13521-003

C	116,3	[4.58]	Dia. Max.
D	111,8	[4.40]	Dia. Min.
E	37,64	[1.482]	Dia.
F	136,7	[5.38]	Max.
G	131,6	[5.18]	Min. Full Form Dia.
H	64,8	[2.55]	
J	26,4	[1.04]	
K	109,7	[4.32]	Max.
L	104,6	[4.12]	Min. Full Form Dia.
M	92,58	[3.645]	Dia.
N	73,28	[2.885]	Dia.

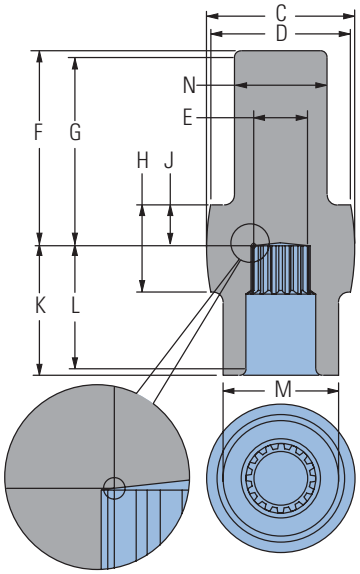

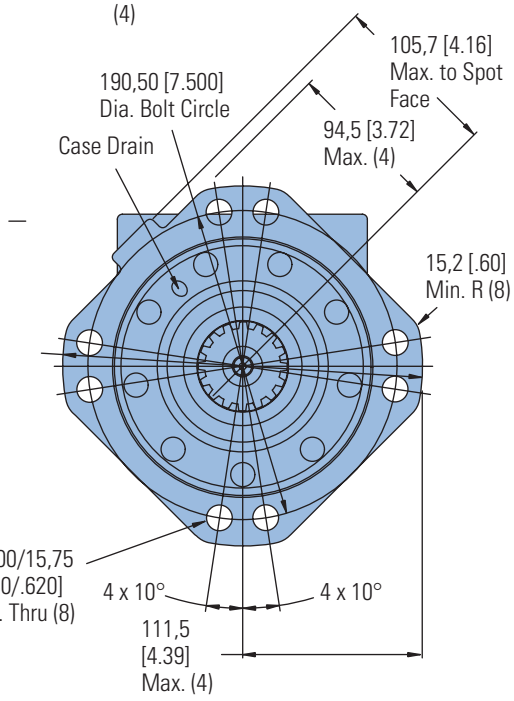

BEARINGLESS MOTORS

Displacement cm³/r [in³/r]	X mm [inch]	Y mm [inch]
630 [38.6]	161,5 [6.36]	130,3 [5.13]
805 [48.6]	172,5 [6.79]	141,2 [5.56]
990 [60.5]	184,4 [7.26]	153,4 [6.04]
1245 [76.0]	200,7 [7.90]	169,7 [6.68]
1560 [95.0]	220,5 [8.68]	189,5 [7.46]

VIS 45 Series

Installation Information

Bearingless

1 Internal spline in mating part to be per spline data. Specification material to be ASTM A304, 8620H carburize to a hardness of 59-62 HRc with case depth (to 50HRc) of 0,76 -1,27 [.030 -.050]. Dimensions apply after heat treat.

(2) Mating part to have critical dimensions as shown. Oil holes must be provided and open for proper oil circulation.

(3) Seal to be furnished with motor for proper oil circulation thru splines.

(4) Dimension indicated applies within area shown.

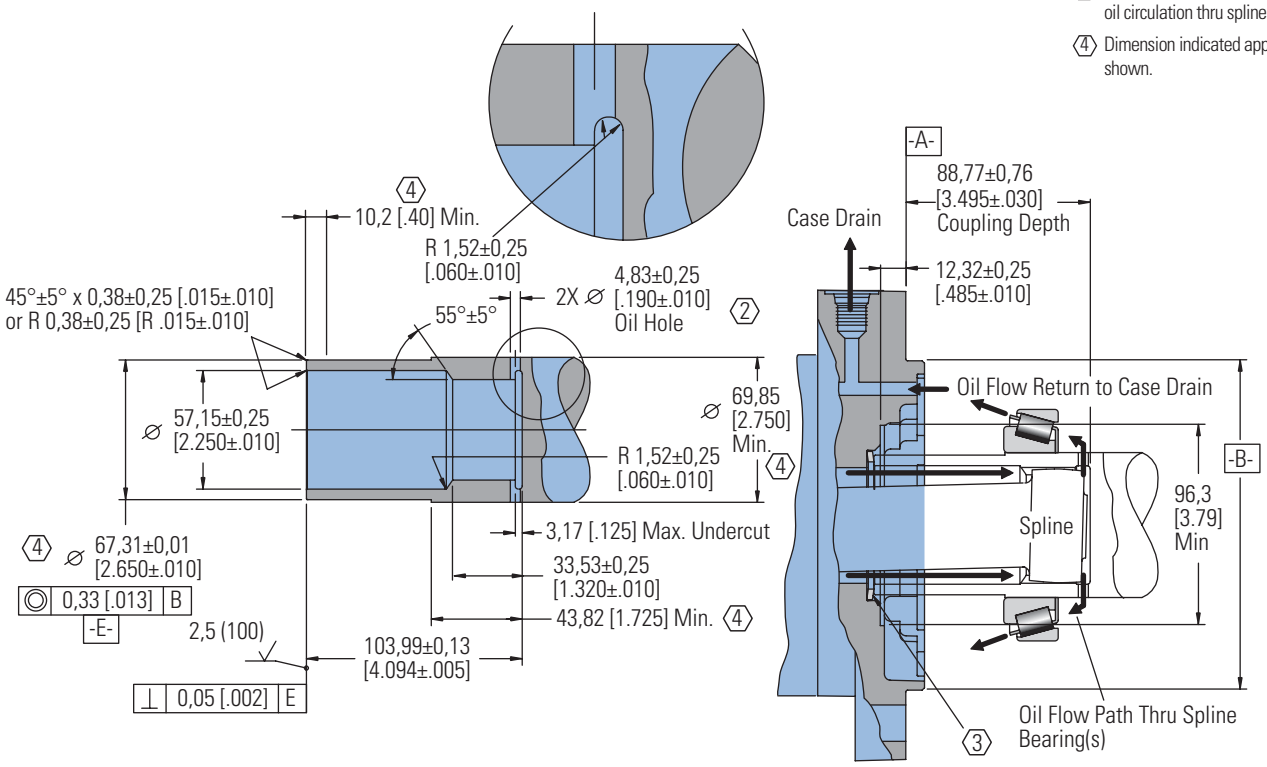

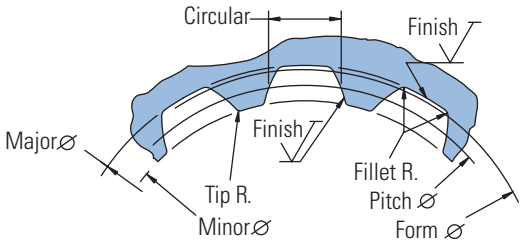

Spline Pitch	8/16
Pressure Angle	30°
Number of teeth	16
Class of Fit	Ref. 5
Type of Fit	Side
Pitch Diameter	Ref. 50,80000 [2.0000000] ◎ 0,33 [.013] B
Base Diameter	Ref. 43,994090032 [1.7320508]
Major Diameter	56,34±0,15 [2.218±.006]
Min. Minor Diameter	48,44±0,08 [1.907±.003]
Form Diameter, Min.	55,22 [2.174]
Fillet Radius	1,02±0,25 [.040±.010]
Tip Radius	0,38±0,13 [.015±.005]
Finish	1,6 (63)
Involute Profile Variation	+0,000 -0,025 [+.0000 -.0010]
Total Index Variation	0,041 [.0016]
Lead Variation	0,015 [.0006]
Circular Space Width:	
Maximum Actual	6,180 [.2433]
Minimum Effective	6,048 [.2381]
Maximum Effective	Ref. 6,099 [.2401]
Minimum Actual	Ref. 6,114 [.2407]
Dimension Between Two Pins	Ref. 42,659 ±0,05 [1.6795±.0020]
Pin Diameter	6,223 [.2450]

D-2

VIS 45 Series

Dimensions Shafts

Splined

70 mm
22 Tooth Splined

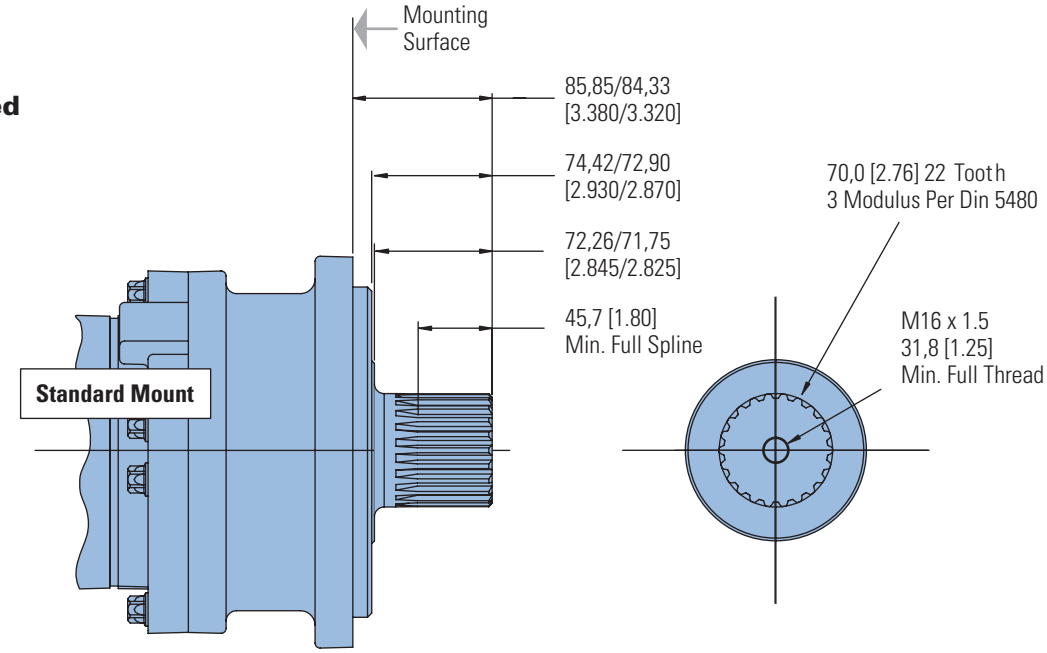

2–3/4 Inch
32 Tooth Splined

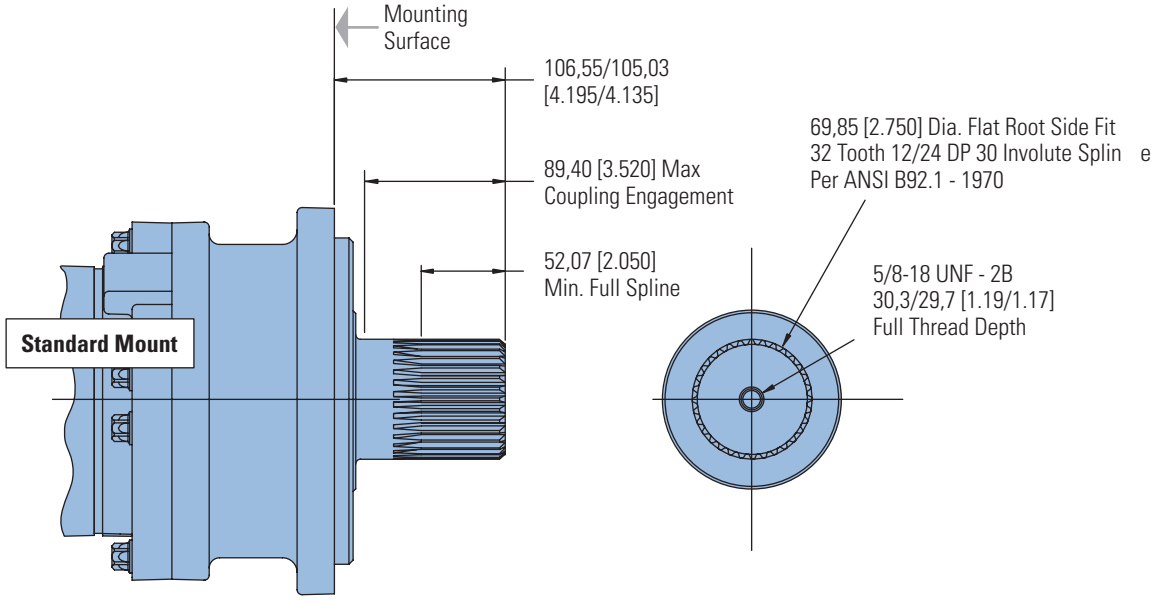

VIS 45 Series

Dimensions Shafts

Keyed

2–5/8 Inch Straight

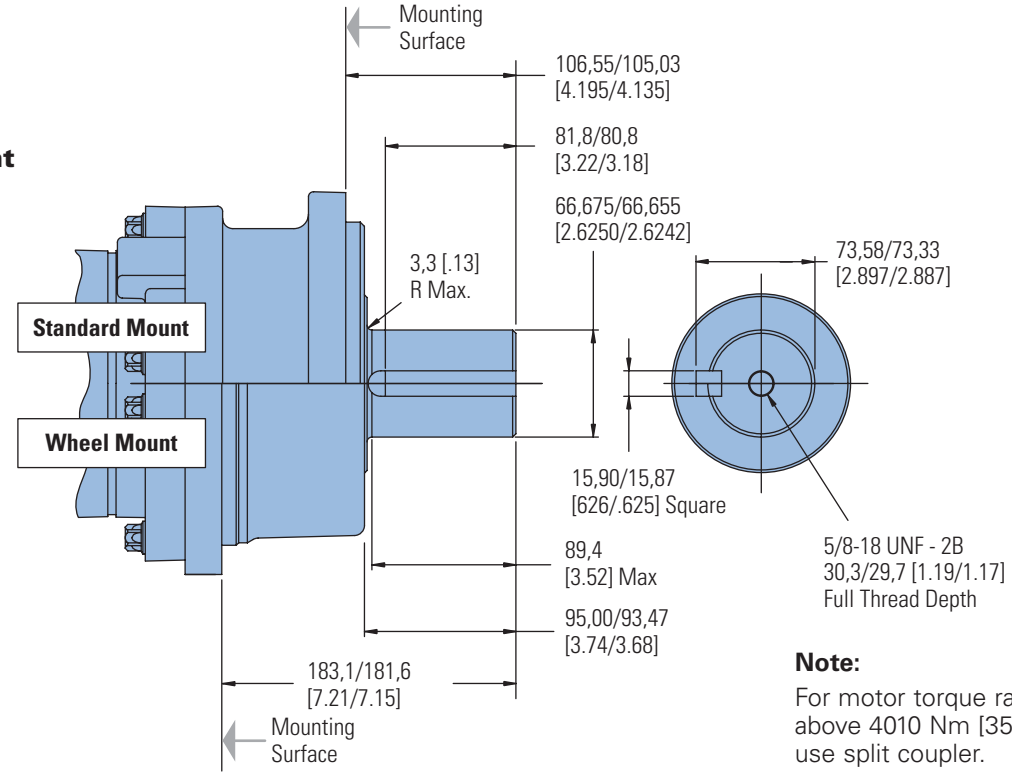

Note:

For motor torque ratings above 4010 Nm [35500 lb - in] use split coupler.

60 mm Tapered

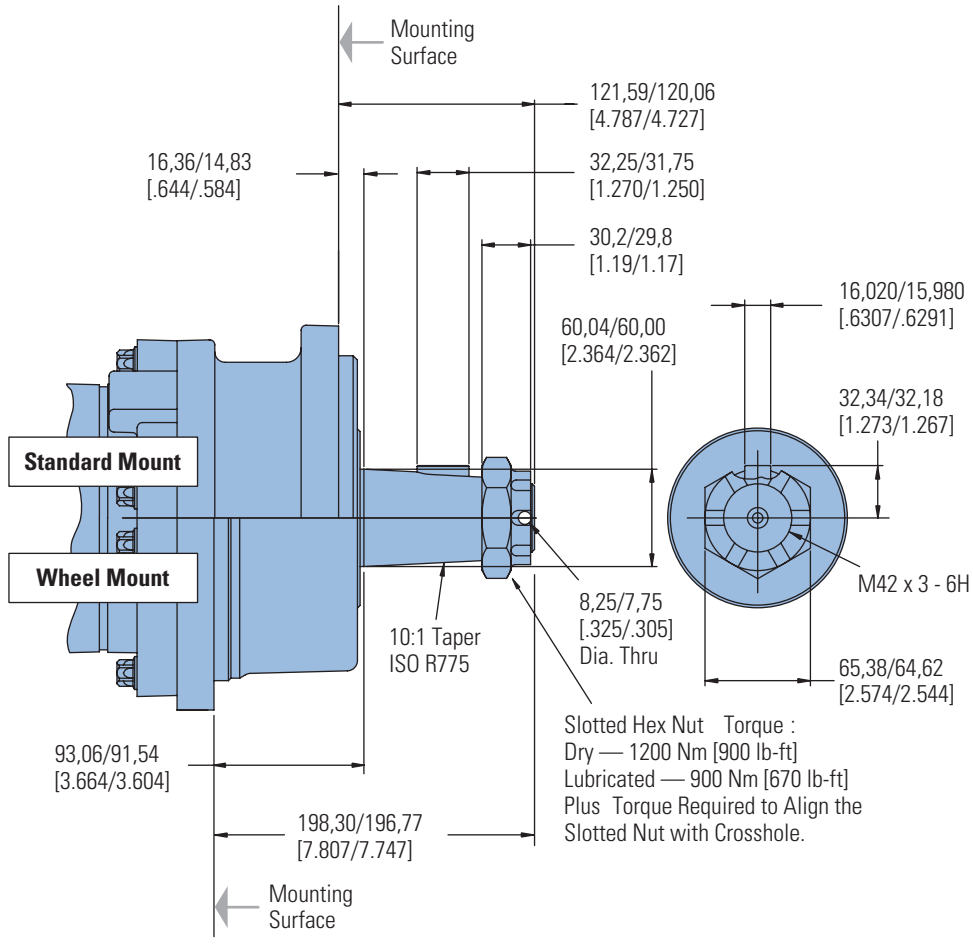

VIS 45 Series

Side Load Capacity

These curves indicate the radial load capacity on the motor shaft(s) at various locations.

The curve is based on B 10 bearing life (2000 hours or 12,000,000 shaft revolutions at 100 RPM) at rated output torque. To determine radial load at speeds other than 100 RPM, multiply the load values given on the bearing curve by the factors in the chart below.

RPM	Multiplication Factor
50	1.23
100	1.00
200	0.81
300	0.72
400	0.66
500	0.62
600	0.58
700	0.56
800	0.54

For 3,000,000 shaft revolutions or 500 hours — Increase these shaft loads 52%.

Standard Mount

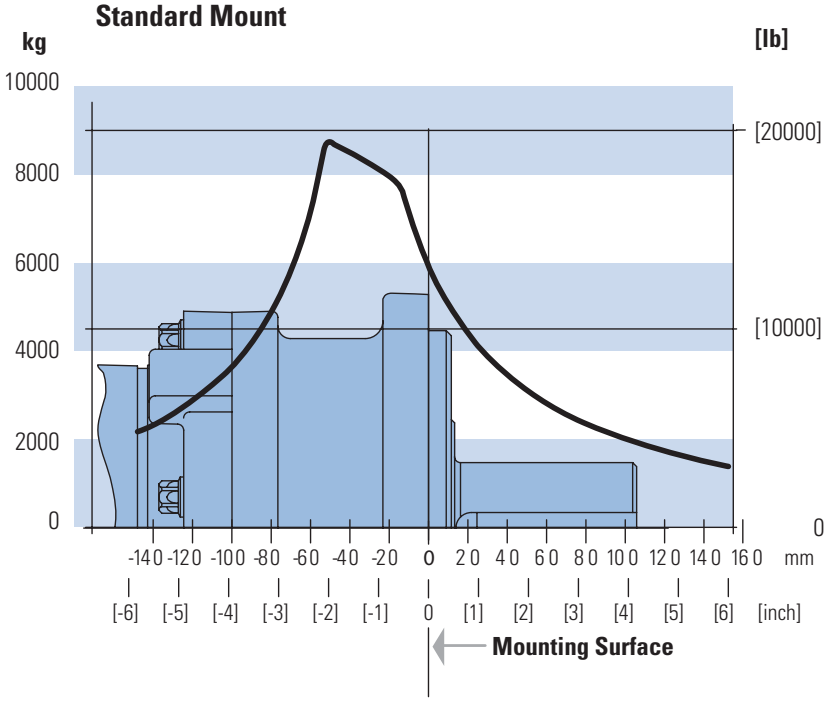

Wheel Mount

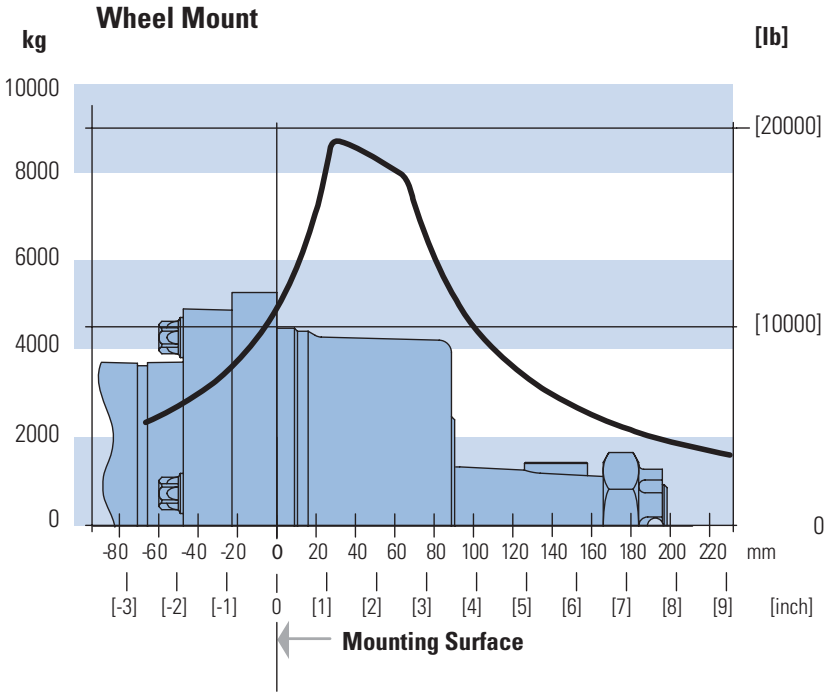

VIS 45 Series

Product Numbers

Closed Loop

Use three-digit prefix (155-, 156-, or 157-) plus four-digit number from charts for complete product number (ex: 157-0034).

Orders will not be accepted without the three-digit prefix.

SAE

MOUNTING	SHAFT	PORT SIZE	DISPL. cm^3/r [in^3/r] / PRODUCT NUMBER				
			630 [38.6]	805 [48.6]	990 [60.5]	1245 [76.0]	1560 [95.0]
Standard	2–5/8 inch Straight	1–5/16-12 UNF O-ring (2) 9/16-18 UNC Drain Port (1)	155-0107	-0108	-0109	-0110	-0111
	60 mm Tapered	1–5/16-12 UNF O-ring (2) 9/16-18 UNC Drain Port (1)	155-0114	-0115	-0116	-0117	-0118
	70 mm 22 Tooth Splined	1–5/16-12 UNF O-ring (2) 9/16-18 UNC Drain Port (1)	155-0121	-0122	-0123	-0124	-0125
	2–3/4 inch 32 Tooth Splined	1–5/16-12 UNF O-ring (2) 9/16-18 UNC Drain Port (1)	155-0128	-0085	-0129	-0130	-0131
Wheel	2–5/8 inch Straight	1–5/16-12 UNF O-ring (2) 9/16-18 UNC Drain Port (1)	156-0039	-0040	-0041	-0042	-0043
	60 mm Tapered	1–5/16-12 UNF O-ring (2) 9/16-18 UNC Drain Port (1)	156-0046	-0047	-0048	-0049	-0050
Bearingless	(8 Bolt)	1–5/16-12 UNF O-ring (2) 9/16-18 UNC Drain Port (1)	157-0066	-0067	-0068	-0069	-0070
	(4 Bolt)	1–5/16-12 UNF O-ring (2) 9/16-18 UNC Drain Port (1)	157-0004	-	-	-	-

157-0004

ISO

MOUNTING	SHAFT	PORT SIZE	DISPL. cm^3/r [in^3/r] / PRODUCT NUMBER				
			630 [38.6]	805 [48.6]	990 [60.5]	1245 [76.0]	1560 [95.0]
Standard	2–5/8 inch Straight	G 1 (BSP) (2) G 1/4 (BSP) Drain Port (1)	155-0134	-0135	-0136	-0137	-0138
	60 mm Tapered	G 1 (BSP) (2) G 1/4 (BSP) Drain Port (1)	155-0141	-0142	-0143	-0144	-0145
	70 mm 22 Tooth Splined	G 1 (BSP) (2) G 1/4 (BSP) Drain Port (1)	155-0148	-0149	-0150	-0151	-0152
	2–3/4 inch 32 Tooth Splined	G 1 (BSP) (2) G 1/4 (BSP) Drain Port (1)	155-0155	-0156	-0157	-0158	-0159
Wheel	2–5/8 inch Straight	G 1 (BSP) (2) G 1/4 (BSP) Drain Port (1)	156-0053	-0054	-0055	-0056	-0057
	60 mm Tapered	G 1 (BSP) (2) G 1/4 (BSP) Drain Port (1)	156-0060	-0061	-0062	-0063	-0064
Bearingless	(8 Bolt)	G 1 (BSP) (2) G 1/4 (BSP) Drain Port (1)	157-0074	-0075	-0076	-0077	-0078
	(4 Bolt)	G 1 (BSP) (2) G 1/4 (BSP) Drain Port (1)	157-0081				

157-0081

Note:

The product numbers on this page are for motors used in closed loop circuits. They include a back-pressure relief valve that is set at 15,2 bar [220 PSI].

- A case drain is required for all closed loop VIS motor applications.
- The maximum case pressure for the VIS motor is 3,5 bar [50 PSI].

D-2

VIS 45 Series

Model Code

The following 16 - digit coding system has been developed to identify all of the configuration options for the VIS 45 motor. Use this model code to specify a motor with the desired features. All 16 digits of the code must be present when ordering. You may want to photocopy the matrix below to ensure that each number is entered in the correct box.

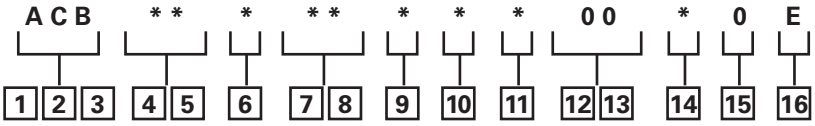

1, 2, 3 Product Series

ACB – VIS 45 Motor

4, 5 Displacement cm³/r [in³/r]

39 – 630 [38.6]

49 – 805 [48.6]

60 – 990 [60.5]

76 – 1245 [76.0]

95 – 1500 [95.0]

6 Mounting Type

A – 4 Bolt Bearingless 158,70 [6.250] Pilot Dia. With 9,07 [.355] Pilot Length and 17,53 [.690] Dia holes on 190,50 [7.500] Dia. B. C. - Max. Torque Allowed 3615 Nm [32000 lb - in] (Displ. Code 32, 35, 39 Only)

C – 8 Bolt Bearingless 158,70 [6.250] Pilot Dia. With 9,07 [.355] Pilot Length and 17,53 [.690] Dia holes on 190,50 [7.500] Dia. Bolt Circle

D – 4 Bolt Wheel Mount 200,0 [7.87] Pilot Dia. With 9,0 [.35] Pilot Length and 20,57 [.810] Dia. Holes on 250,0 [9.84] Dia. Bolt Circle

H – 4 Bolt Standard Mount 200,0 [7.87] Pilot Dia. With 9,0 [.35] Pilot Length and 20,57 [.810] Dia. Holes on 250,00 [9.84] Dia. Bolt Circle

7, 8 Output Shaft

00 – None (Bearingless)

05 – 2-5/8 inch Dia. Straight Shaft with 5/8-18 UNF-2B Thread in End and 15,88 [.625] Sq. X 81,3 [3.20] Straight Key

06 – 70 mm Dia. 22 Tooth 3 Modulus Splined Shaft Per DIN 5480 with M16 X 1,5 Thread in End

08 – 2-3/4 inch Dia. Flat Root Side Fit 32 Tooth 12/24 DP 30°. Involute Spline with 5/8-18 UNF-2B Thread in End

09 – 60 mm Dia. 10:1 Tapered Shaft Per ISO R775 with M42 x 3 - 6H Threaded Shaft End, 16W x 10H x 32L [.630W x .394H x 1.260L]

9 Ports

A – 1-5/16-12 UN-2B O-ring Port, Accepts Fittings for SAE J1926/1

B – G 1 (BSP) Ports, Accepts Fittings with Elastomeric or Deformable Metallic Sealing Member Per DIN 3852

10 Case Flow Options

B – Check valve with leakage orifice, no case drain (for Open Loop only)

D – Shuttle Valve with Side Facing 9/16-18 UNF-2B, O-ring Port Case Drain, Accepts Fittings for SAE J1926/1, Case Drain Required

H – Shuttle Valve with Side Facing G 1/4 (BSP) Port Case Drain, Case Drain Required

11 Back-Pressure Relief

0 – None (for Open Loop Only)

1 – Set at 15,2 bar [220 psi] (for Servo Pumps)

3 – Set at 4,5 bar [65 psi] (for Manual Pumps)

4 – Set at 20,7 bar [300 PSI] (for High Pressure Servo Pumps)

12, 13 Special Features

00 – None

14 Paint/ Special Packaging

0 – Primer, Individual Box

A – Low Gloss Black Primer, Individual Box

B – No Paint, Bulk Box Option

C – Low Gloss Black Primer, Bulk Box Option

15 Eaton Assigned Code when Applicable

0 – Assigned Code

16 Eaton Assigned Design Code

E – Assigned Design Code

VIS 45 Series Two-speed

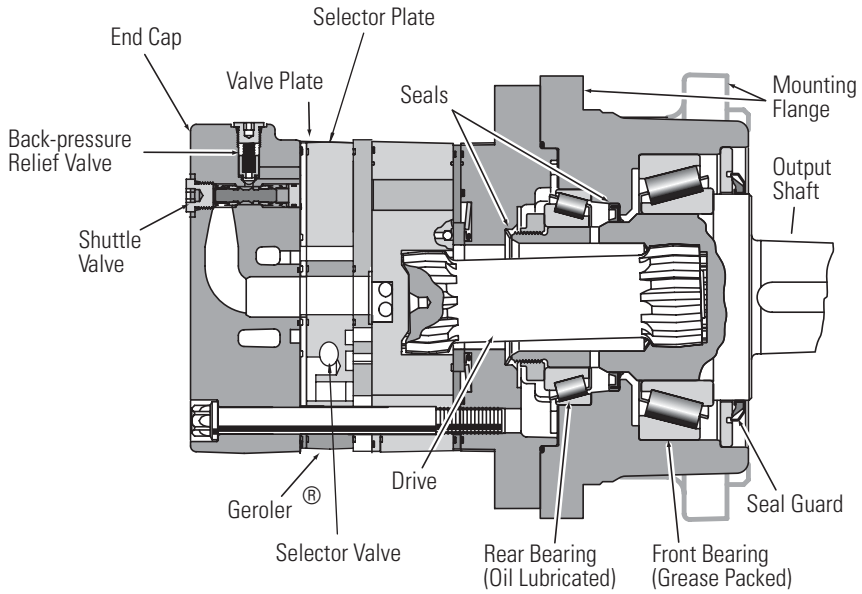

Specifications

VIS 45 Series motors are available with an integral two-speed feature that allows the operator to shift the motor between low speed high torque (LSHT) mode and high speed low torque (HSLT) mode. In the LSHT mode, output torque and rotation speed values are equal to those of the conventional VIS 45 motor. In the HSLT mode motor displacement is reduced by one third, resulting in a fifty percent increase in rotation speed and a torque output reduction of one third. The VIS 45 two speed motor is bidirectional. It will function with equal shaft output in either rotation direction (CW or CCW) in both LSHT and HSLT modes. Shift on the fly technology allows full-power operation throughout the full duration of the shift.

Changing between modes is accomplished by changing the displacement in a ratio of 1 to 1.5. An external two-position three-way control valve is required for shifting pressure to the pilot port between low pressure (LSHT mode) and pilot signal pressure (HSLT mode). An integral selector valve shifts the motor from LSHT mode to HSLT mode. Initially, low pressure is supplied to the pilot port. The selector valve is biased to LSHT mode by a return spring. When pilot signal pressure is supplied to the pilot port and 3,5 Δbar [50 ΔPSI] is reached, the selector valve overcomes return spring force and the shifts the spool to select HSLT mode. Oil on the opposite side of the spool is drained to tank via the drain port. The pressure difference between the pilot port and drain port must be maintained to keep the motor in the high speed mode. When pilot pressure is removed from the pilot port, the pressure in the pilot end of the spool valve is relieved and drained back through the control valve and the return spring forces the spool valve to LSHT position.

Pilot pressure may come from any source that will provide uninterrupted pressure during the high-speed mode operation. Allowable pilot pressure must be at least 3,5 Δbar [50 ΔPSI] and may be as high as full operating pressure of the motor.

All VIS 45 Series two speed motors are equipped with a return line shuttle for closed circuit applications as standard equipment. All options available on the conventional VIS 45 are also available on VIS 45 two speed motors.

Performance Data

In the LSHT mode, torque and speed values are equal to those of the conventional VIS 45 motor. In the HSLT mode, rotation speed is increased by fifty percent and torque output is reduced by one third.

The VIS 45 two speed motor will function with equal shaft output in either rotation direction (CW or CCW) in both LSHT and HSLT modes.

VIS 45 Series Two-speed

Dimensions

Standard Mount

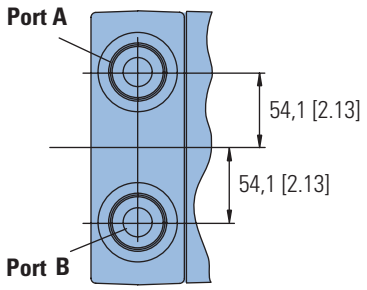

Ports

1–5/16-12 UN-2B SAE O-ring Ports (2)

9/16-18 UNF-2B SAE O-ring Case Drain Port (1)

7/16 -20 UNF -2B SAE O-ring Shift Ports (2)

or

G 1 (BSP) O-ring Ports (2)

G 1/4 (BSP) O-ring Case Drain Port (1)

7/16 -20 UNF -2B SAE O-ring Shift Ports (2)

Standard Rotation Viewed from Shaft End

Port A Pressurized — CW
Port B Pressurized — CCW

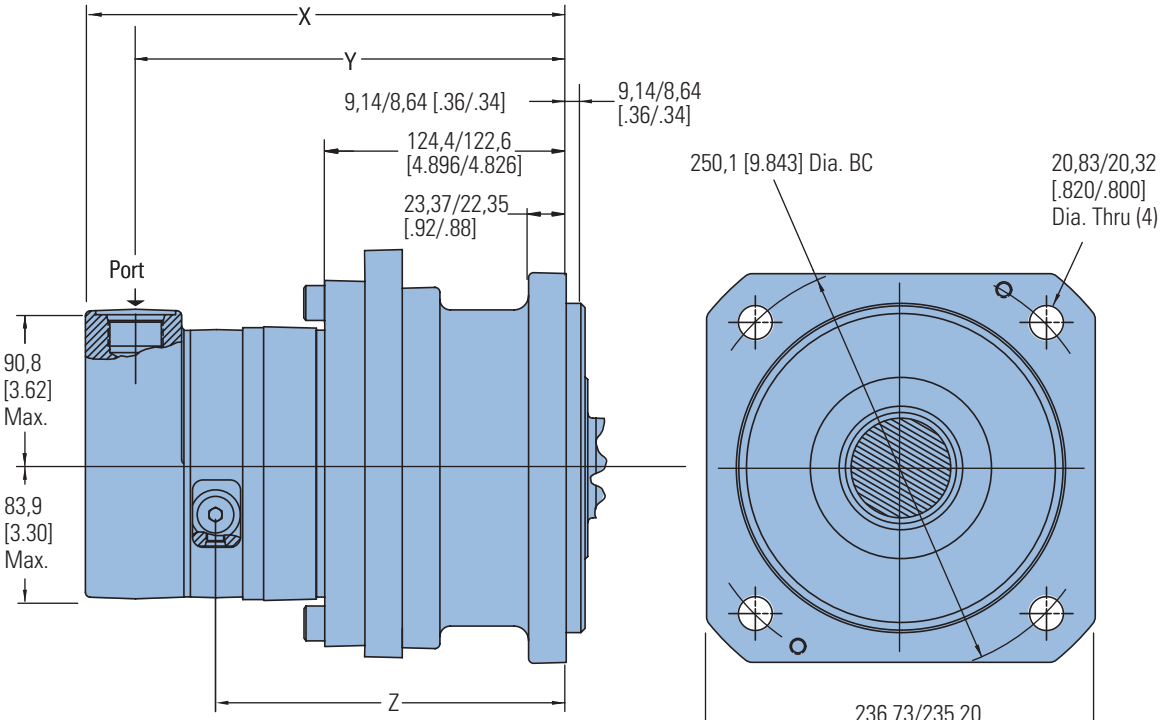

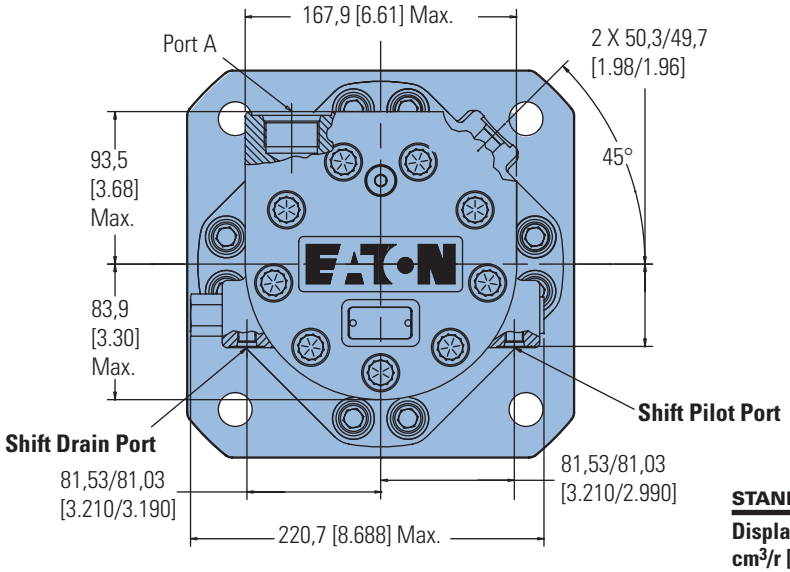

STANDARD MOUNT

Displacement cm³/r [in³/r]	X mm [inch]	Y mm [inch]	Z mm [inch]
630 [38.6]	295,5 [11.63]	263,2 [10.36]	216,3 [8.51]
805 [48.6]	305,9 [12.04]	273,6 [10.77]	226,7 [8.92]
990 [60.5]	318,3 [12.53]	286,0 [11.26]	239,1 [9.41]
1245 [76.0]	334,3 [13.16]	302,0 [11.89]	255,1 [10.04]
1560 [95.0]	353,3 [13.94]	321,0 [12.67]	274,1 [10.82]

VIS 45 Series Two-speed

Dimensions

Wheel Mount

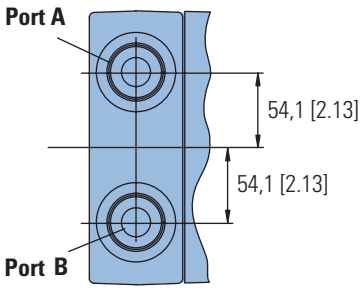

Ports

1–5/16-12 UN-2B SAE O-ring Ports (2)

9/16-18 UNF-2B SAE O-ring Case Drain Port (1)

7/16 -20 UNF -2B SAE O-ring Shift Ports (2)

or

G 1 (BSP) O-ring Ports (2)

G 1/4 (BSP) O-ring Case Drain Port (1)

7/16 -20 UNF -2B SAE O-ring Shift Ports (2)

Standard Rotation Viewed from Shaft End

Port A Pressurized — CW
Port B Pressurized — CCW

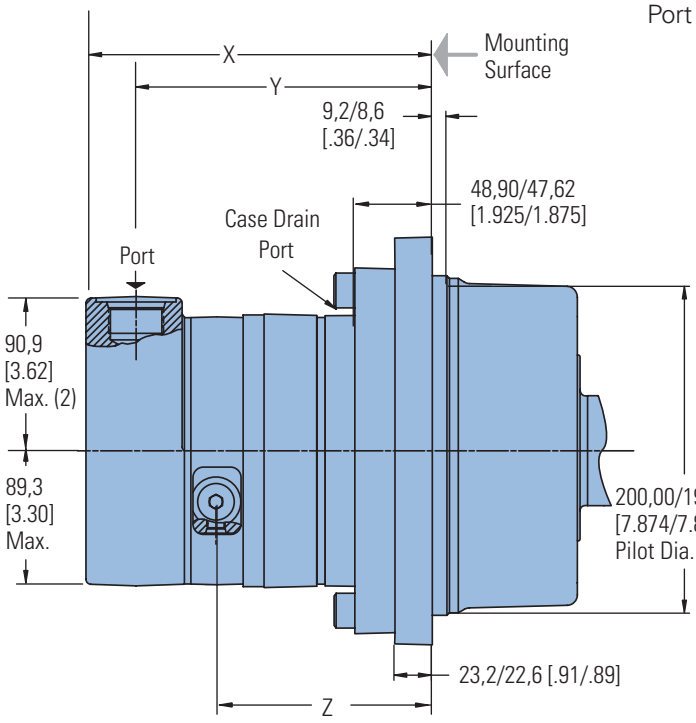

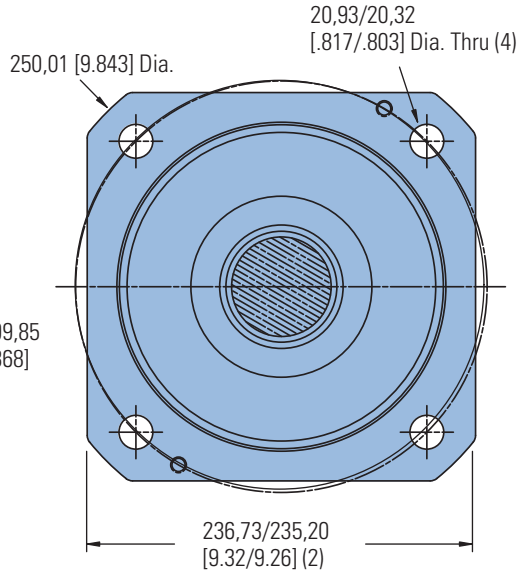

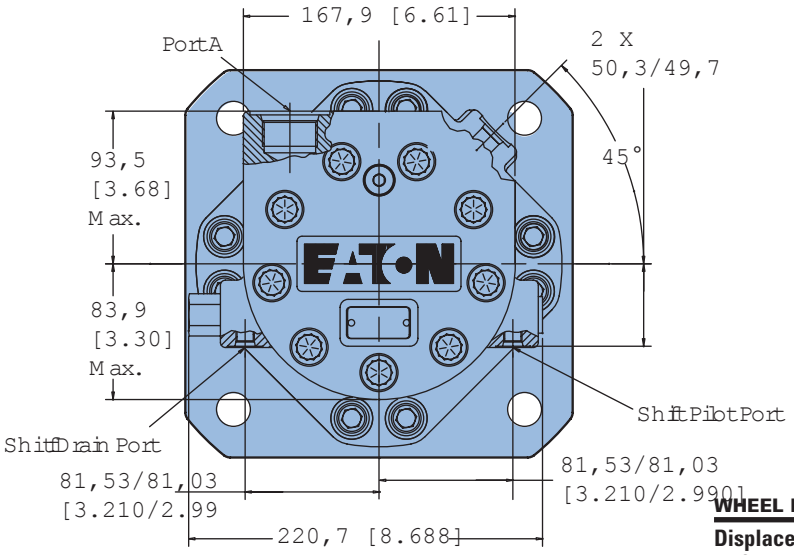

WHEEL MOUNT

Displacement cm³/r [in³/r]	X mm [inch]	Y mm [inch]	Z mm [inch]
630 [38.6]	218,8 [8.61]	186,5 [7.34]	139,6 [5.49]
805 [48.6]	229,2 [9.02]	196,9 [7.75]	150,0 [5.90]
990 [60.5]	241,6 [9.51]	209,4 [8.24]	162,4 [6.39]
1245 [76.0]	257,6 [10.14]	225,6 [8.88]	178,4 [7.02]
1560 [95.0]	276,6 [10.92]	245,4 [9.66]	197,4 [7.80]

VIS 45 Series Two-speed

Dimensions

Bearingless

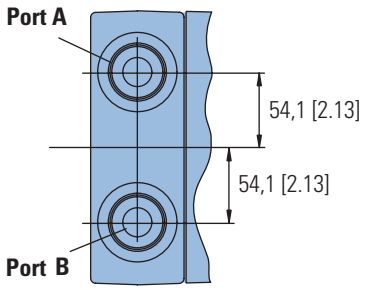

Ports

1–1/16-12 UN-2B SAE O-ring Ports (2)

9/16-18 UNF-2B SAE O-ring Case Drain Port (1)

7/16 -20 UNF -2B SAE O-ring Shift Ports (2)

Or

G 3/4 (BSP) O-ring Ports (2)

G 1/4 (BSP) O-ring Case Drain Port (1)

7/16 -20 UNF -2B SAE O-ring Shift Ports (2)

Standard Rotation Viewed from Drive End

Port A Pressurized — CW
Port B Pressurized — CCW

For VIS 45 two-speed bearingless motor application information, contact your Eaton representative (mating coupling blanks available from Eaton Hydraulics).

Note:

After machining blank, part must be hardened per Eaton specification.

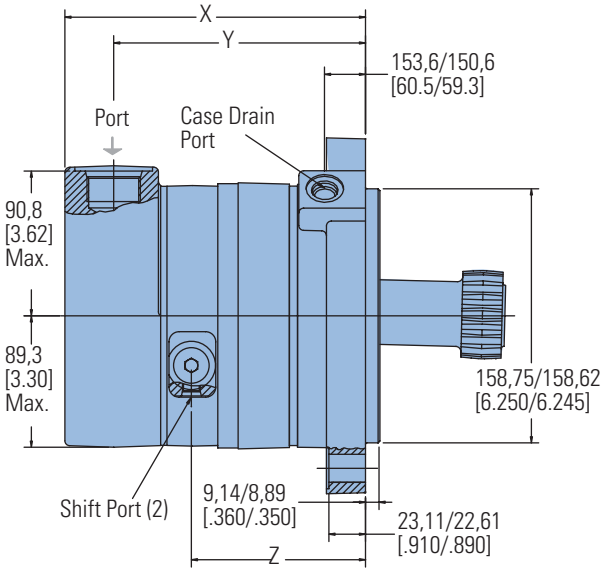

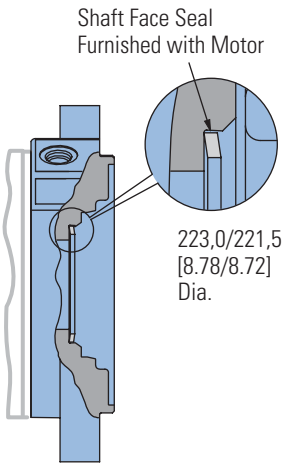

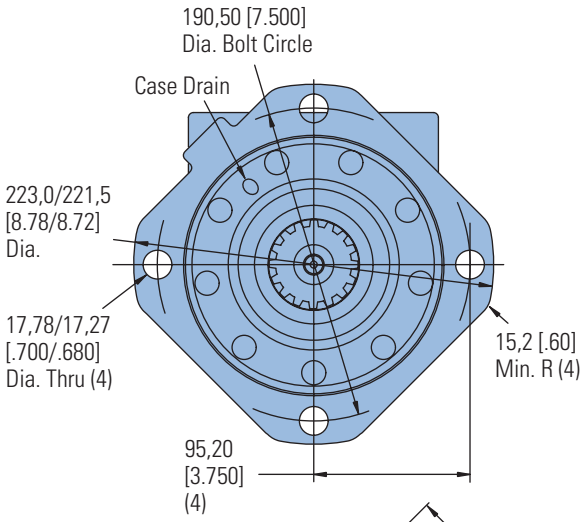

Mating Coupling Blank
Eaton Part No. 13521-003

C	116,3	[4.58]	Dia. Max.
D	111,8	[4.40]	Dia. Min.
E	37,64	[1.482]	Dia.
F	136,7	[5.38]	Max.
G	131,6	[5.18]	Min. Full Form Dia.
H	64,8	[2.55]	
J	26,4	[1.04]	
K	109,7	[4.32]	Max.
L	104,6	[4.12]	Min. Full Form Dia.
M	92,58	[3.645]	Dia.
N	73,28	[2.885]	Dia.

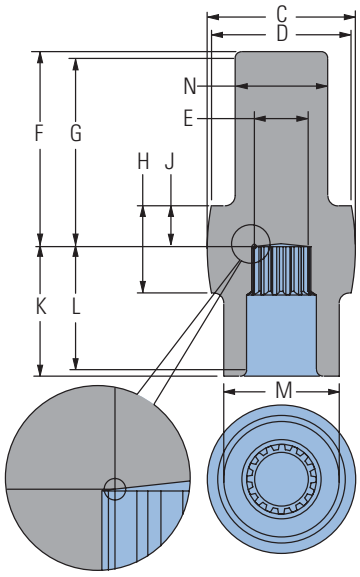

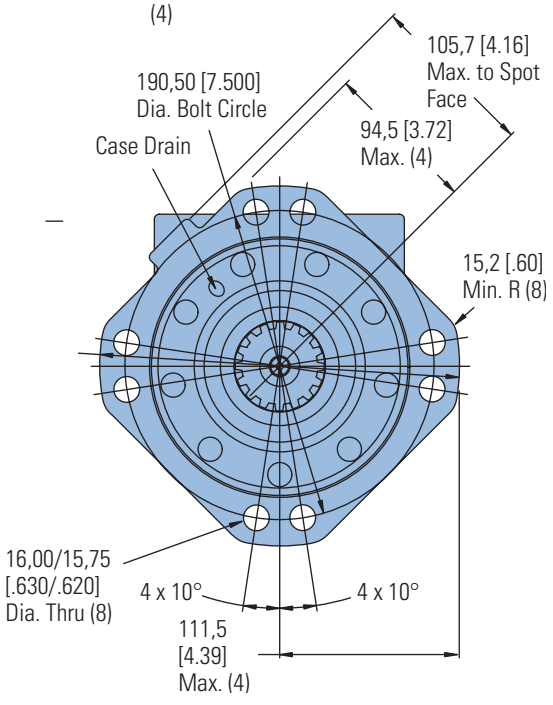

BEARINGLESS MOTORS

Displacement cm³/r [in³/r]	X mm [inch]	Y mm [inch]	Z mm [inch]
630 [38.6]	196,1 [7.72]	165,9 [6.53]	116,9 [4.60]
805 [48.6]	206,5 [8.13]	176,3 [6.94]	127,3 [5.01]
990 [60.5]	218,9 [8.62]	188,8 [7.43]	139,7 [5.50]
1245 [76.0]	235,2 [9.26]	205,0 [8.07]	156,0 [6.14]
1560 [95.0]	255,0 [10.04]	224,8 [8.85]	175,8 [6.92]

VIS 45 Series Two-speed

Product Numbers

(Closed Loop)

Use digit prefix—173-, 174- or 183- plus four digit number from charts for complete product number—

Example: 173-0013.

Orders will not be accepted without three digit prefix.

SAE

MOUNTING	SHAFT	PORT SIZE	DISPL. cm^3/r [in^3/r] / PRODUCT NUMBER				
			630 [38.6]	805 [48.6]	990 [60.5]	1245 [76.0]	1560 [95.0]
Standard	2–5/8 inch Straight	1–5/16-12 UNF O-ring (2) 9/16-18 UNC Drain Port (1)	174-0006	-0007	-0008	-0009	-0010
	60 mm Tapered	1–5/16-12 UNF O-ring (2) 9/16-18 UNC Drain Port (1)	174-0011	-0012	-0013	-0014	-0015
	70 mm 22 Tooth Splined	1–5/16-12 UNF O-ring (2) 9/16-18 UNC Drain Port (1)	174-0016	-0017	-0018	-0019	-0020
Wheel	2–3/4 inch 32 Tooth Splined	1–5/16-12 UNF O-ring (2) 9/16-18 UNC Drain Port (1)	174-0021	-0022	-0023	-0024	-0025
	2–5/8 inch Straight	1–5/16-12 UNF O-ring (2) 9/16-18 UNC Drain Port (1)	183-0006	-0007	-0008	-0009	-0010
	60 mm Tapered	1–5/16-12 UNF O-ring (2) 9/16-18 UNC Drain Port (1)	183-0011	-0012	-0013	-0014	-0015
Bearingless	(8 Bolt)	1–5/16-12 UNF O-ring (2) 9/16-18 UNC Drain Port (1)	173-0008	-0009	-0010	-0011	-0012
	(4 Bolt)	1–5/16-12 UNF O-ring (2) 9/16-18 UNC Drain Port (1)	173-0013	-	-	-	-

173-0013

ISO

MOUNTING	SHAFT	PORT SIZE	DISPL. cm^3/r [in^3/r] / PRODUCT NUMBER				
			630 [38.6]	805 [48.6]	990 [60.5]	1245 [76.0]	1560 [95.0]
Standard	2–5/8 inch Straight	G 1 (BSP) (2) G 1/4 (BSP) Drain Port (1)	174-0026	-0027	-0028	-0029	-0030
	60 mm Tapered	G 1 (BSP) (2) G 1/4 (BSP) Drain Port (1)	174-0031	-0032	-0033	-0034	-0035
	70 mm 22 Tooth Splined	G 1 (BSP) (2) G 1/4 (BSP) Drain Port (1)	174-0036	-0037	-0038	-0039	-0040
Wheel	2–3/4 inch 32 Tooth Splined	G 1 (BSP) (2) G 1/4 (BSP) Drain Port (1)	174-0041	-0042	-0043	-0044	-0045
	2–5/8 inch Straight	G 1 (BSP) (2) G 1/4 (BSP) Drain Port (1)	183-0016	-0017	-0018	-0019	-0020
	60 mm Tapered	G 1 (BSP) (2) G 1/4 (BSP) Drain Port (1)	183-0021	-0022	-0023	-0024	-0025
Bearingless	(8 Bolt)	G 1 (BSP) (2) G 1/4 (BSP) Drain Port (1)	173-0014	-0015	-0016	-0017	-0018
	(4 Bolt)	G 1 (BSP) (2) G 1/4 (BSP) Drain Port (1)	173-0019	-	-	-	-

173-0019

Note:

The product numbers on this page are for motors used in closed loop circuits. They include a back-pressure relief valve that is set at 15,2 bar [220 PSI].

- A case drain is required for all closed loop VIS motor applications.
- The maximum case pressure for the VIS motor is 3,5 bar [50 PSI].

D-2

VIS 45 Series Two-speed

Model Code

The following 18-digit coding system has been developed to identify all of the configuration options for the VIS 45 Two-Speed motor. Use this model code to specify a motor with the desired features. All 18 digits of the code must be present when ordering. You may want to photocopy the matrix below to endure that each number is entered in the correct box.

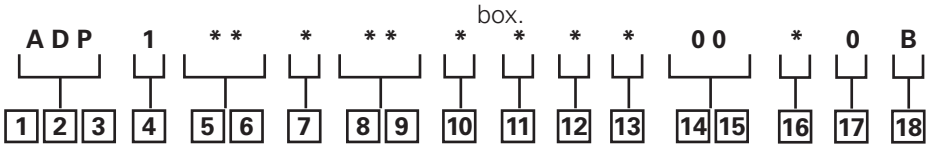

1, 2, 3 Product Series

ADP – VIS 45 Two-speed Motor

4 Eaton Assigned Code

1 – Assigned Code

5 6 Displacement cm³/r [in³/r]

49 – 805 [48.6]

60 – 990 [60.5]

76 – 1245 [76.0]

95 – 1560 [95.0]

7 Mounting Type

A – 4 Bolt Bearingless 158,70 [6.250] Pilot Dia. With 9,07 [.355] Pilot Length and 17,53 [.690] Dia holes on 190,50 [7.500] Dia. B. C. - Max. Torque Allowed 3615 Nm [32000 lb-in] (Displ. Code 32, 35, 39 Only)

C – 8 Bolt Bearingless 158,70 [6.250] Pilot Dia. With 9,07 [.355] Pilot Length and 17,53 [.690] Dia holes on 190,50 [7.500] Dia. Bolt Circle

D – 4 Bolt Wheel Mount 200,0 [7.87] Pilot Dea. With 9,0 [.35] Pilot Length and 20,57 [.810] Dia. Holes on 250,0 [9.84] Dia. Bolt Circle

H – 4 Bolt Standard Mount 200,0 [7.87] Pilot Dia. With 9,0 [.35] Pilot Length and 20,57 [.810] Dia. Holes on 250,00 [9.84] Dia. Bolt Circle

8, 9 Output Shaft

00 – None (Bearingless)

05 – 2-5/8 inch Dia. Straight Shaft with 5/8-18 UNF-2B Thread in End and 15,88 [.625] Sq. X 81,3 [3.20] Straight Key

06 – 70 mm Dia. 22 Tooth 3 Modulus Splined Shaft Per DIN 5480 with M16 X 1,5 Thread in End

08 – 2-3/4 inch Dia. Flat Root Side Fit 32 Tooth 12/24 DP 30°. Involute Spline with 5/8-18 UNF-2B Thread in End

09 – 60 mm Dia. 10:1 Tapered Shaft Per ISO R775 with M42 x 3 - 6H Threaded Shaft End, 16W x 10H x 32L [.630W x .394H x 1.260L]

10 Ports

A – 1-5/16-12 UN-2B O-ring Port, Accepts Fittings for SAE J1926/1

B – G 1 (BSP) Straight Thread Ports

11 Case Flow Options

D – Shuttle Valve with Side Facing 9/16-18 UNF-2B, O-ring Port Case Drain, Accepts Fittings for SAE J1926/1, Case Drain Required

F – Shuttle Valve with Side Facing G 1/4 (BSP) Port Case Drain, Case Drain Required

12 Back-Pressure Relief

1 – Set at 15,2 bar [220 psi] (for Servo Pumps)

3 – Set at 4,5 bar [65 psi] (for Manual Pumps)

4 – Set at 20,7 bar [300 PSI] (for High Pressure Servo Pumps)

13 Eaton Assigned Code

0 – Assigned Code

14, 15 Special Features

00 – None

16 Paint/ Special Packaging

0 – Primer, Individual Box

A – Low Gloss Black Primer, Individual Box

B – No Paint, Bulk Box Option

C – Low Gloss Black Primer, Bulk Box Option

17 Eaton Assigned Code when Applicable

0 – Assigned Code

18 Eaton Assigned Design Code

B – Assigned Design Code

Notes

Eaton
Hydraulics Group USA
14615 Lone Oak Road
Eden Prairie, MN 55344
USA
Tel: 952-937-9800
Fax: 952-294-7722
www.eaton.com/hydraulics

Eaton
Hydraulics Group Europe
Route de la Longeraie 7
1110 Morges
Switzerland
Tel: +41 (0) 21 811 4600
Fax: +41 (0) 21 811 4601

Eaton
Hydraulics Group Asia Pacific
Eaton Building
4th Floor, No. 3 Lane 280 Linhong Rd.
Changning District
Shanghai 200335
China
Tel: (+86 21) 5200 0099
Fax: (+86 21) 5200 0400

Powering Business Worldwide

© 2016 Eaton Corporation
All Rights Reserved
Printed in USA
Document No. E-MOLO-MC001-E8
Supersedes E-MOLO-MC001-E7
October 2016