GEAR COUPLINGS

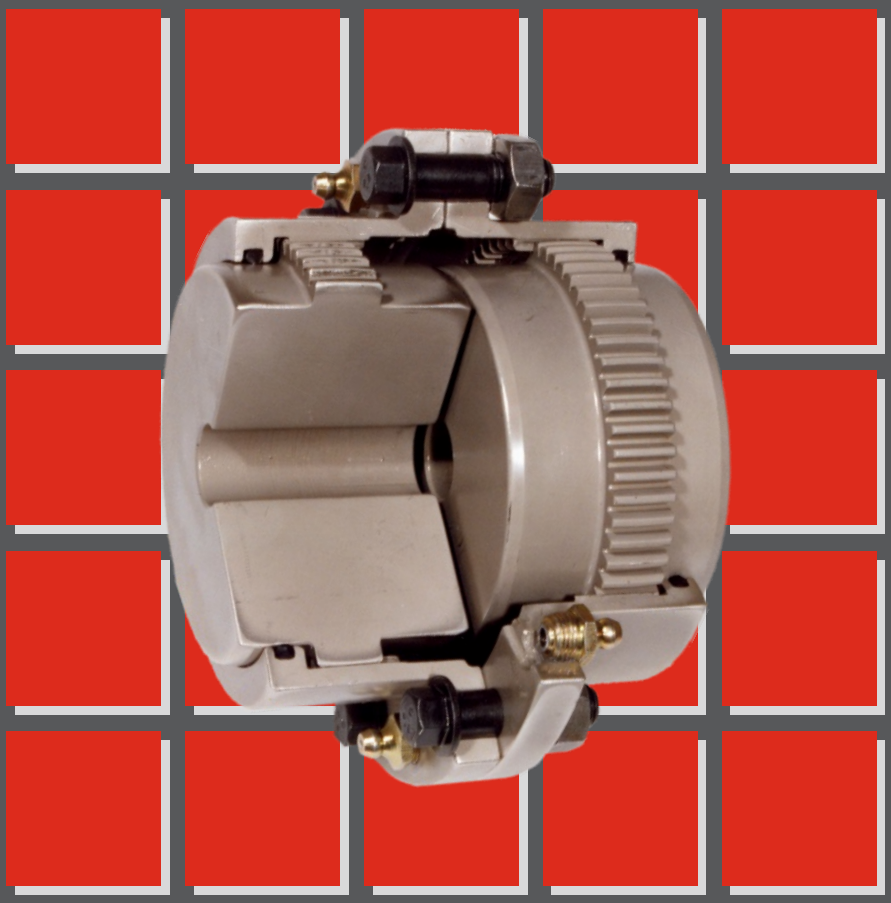

ORGANI DI TRASMISSIONE

270 C

MAINA GEAR COUPLINGS - INTRODUCTION

The full-flex gear couplings are employed to mechanically connect two rotating shafts which have to transmit a torque in a torsionally rigid way. The torque is transmitted from hub to sleeve and vice-versa by the working gear teeth, and between the connecting flanges of the two hubs by the set bolts.

The gear couplings are flexible to compensate the misalignment of the shafts to be connected. They compensate both the initial misalignment (support clearances, dimensional and geometrical tolerances of the equipments, alignment imperfections), and the further alignment modifications (settlings and support wear) and/or temperature (expansion).

The gear couplings are flexible because their working gear teeth must be able to float and slide, in order to compensate misalignments. Floating is performed by engaging outer spherical gear teeth with inner cylindrical ones, both having proper tangential clearance. The outer spherical gear teeth, olive shaped tangential section and "Semitopping" on the head, enable the gear hubs to float on their central axis, thus allowing their axial slide and the continuous lube flow, while avoiding any harmful stress concentration on the gear teeth.

The gear teeth center on their external diameters, with a proper radial clearance, so that the rotating masses do not generate any vibration when operating at low speed and transmitted torque. When the speed and/or the torque get higher, the gear teeth center on their working flanks, so distributing the load on all the teeth.

We recommend to perform a dynamic balancing of the rotating masses - class and requirements to be specified (see AGMA 9000 C90) - in case of high rotation speed or when equipments having supports sensitive to mass inbalance are involved.

A single engagement of gear teeth (half-coupling) can compensate both angular and axial misalignments; two engagements of gear teeth (complete coupling) are required to compensate also the parallel misalignments.

Please remember that angular, parallel, axial and combined misalignments, maximum speed rotation and transmitted torques must be in accordance with the requirements of every kind of coupling, to avoid excessive or early wear. Maintenance and lubrication have to be careful and precise. Please strictly follow our INSTALLATION, USE & MAINTENANCE INSTRUCTIONS (see pages 54, 55, 56, 57, 58).

MAINA gear couplings are obtained by forged steel ingots, machined and heat treated. Gear couplings can be made of different types of steel, as AISI 1045, AISI 4140, Nitralloy N/135/135M which are hardened and tempered before being machined. To increase the load capacity, in some types of couplings, the gear teeth can be surface hardened after machining by thermal or thermochemical treatements and, when required, they can be ground. Main treatments are induction tempering, nitroxidation and gas nitriding.

It is also possible to perform antioxidant and anticorrosive treatments in the end stage.

We can perform a nitroxidation (N.O.) treatment on our standard GO-A gear couplings made of AISI 1045, when required. Besides limiting surface corrosion, this treatment improves surface hardness and wear resistance, and increases working gear teeth lifetime even in presence of high misalignments and rotation speeds.

Unless otherwise required, our gear couplings are properly packaged, according to their dimensions, weight, required type of transport and storage. To prevent oxidation, the interface surfaces or the surfaces which have to be submitted to assembly operations are usually protected by a wax film of TECTYL 506 EH. The raw (semifinished) and wide surfaces of spacer tubes are painted, after sandblasting, by one primer acrylic coat and two final epoxy coats; this kind of painting can resist at temperatures up to 100-120°C.

Different types of coatings can be applied on demand.

The torque a gear coupling can transmit as well as its maximum operating speed change according to the total misalignment between the shafts to be connected (see diagrams of speed factor Kv and of load factor Ki, shown at pages 02, 03, 04 and 05).

The gear couplings must be selected according to the operational data (load and speed), the application, the nominal and max load capacities, the nominal speed, the static and dynamic misalignments and the max admitted bore.

This catalogue shows the main types and designs of flex gear couplings employed in the machinery manufacturing; it does not contain all the possible different designs.

For special solutions, not included in this catalogue, please contact MAINA.

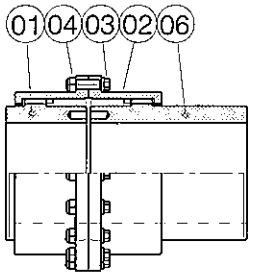

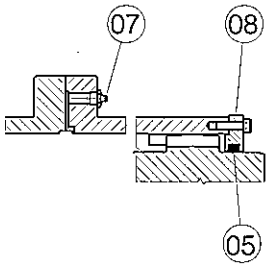

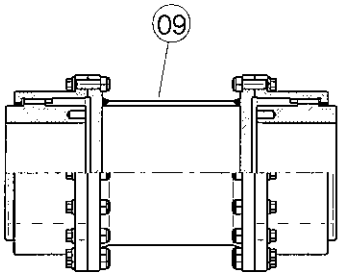

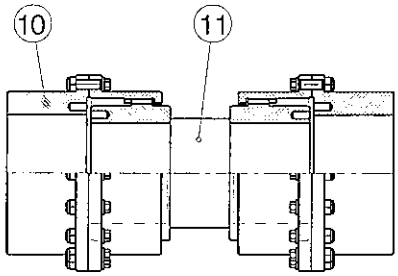

LIST OF COMPONENTS

01	Standard Hub
02	Flanged Sleeve
03	Set Screw
04	Hexagonal Self-locking Nut
05	Seal Gasket
06	Longer Hub
07	Lube Fitting or Lube Plug
08	Removable Side Flange
09	Tubular Spacer
10	Rigid Hub
11	Floating Shaft

INDEX

pag. **01** GO-A, GO-B, GO-B.HT & G20 Couplings - Coupling Selection

pag. **02** GO-A & AO-A Couplings - ki & Kv Factors

pag. **03** GO-B, AO-B, GO-B.HT & AO-B.HT Couplings - ki & Kv Factors

pag. **04** G20-F, G20-FS & G20-FR Couplings - ki & Kv Factors

pag. **05** G35 & G60 Couplings - ki & Kv Factors

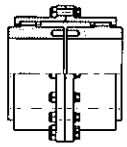

pag. **06** GO-A, GO-AR & GOARR Couplings

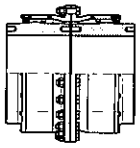

pag. **07** GO-A, HT Couplings

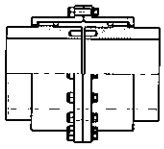

pag. **08** GO-AMM, GO-AM & GO-AMR Couplings

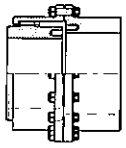

pag. **09** GO-FA, GO-FAR & GO-FAM Couplings

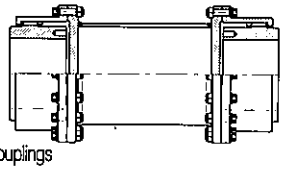

pag. **10** AO-A, AO-ARR & AO-AMM Spacer Couplings

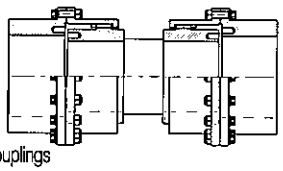

pag. **11** AO-FAC & AO-FARC Floating Shaft Couplings

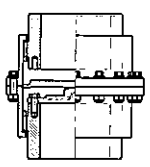

pag. **12** GO-AV Couplings & AO-AV Spacer Couplings

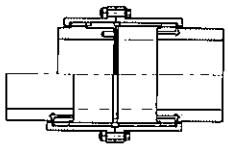

pag. **13** GO-ASC & GO-ASC.D Couplings

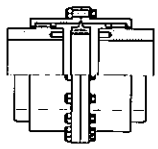

pag. **14** GO-ACS Couplings

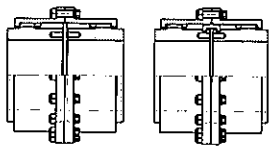

pag. **15** GO-ALGD & GO-ALGE Couplings

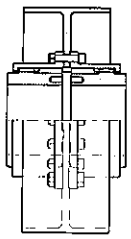

pag. **16** GO-A.FF Couplings

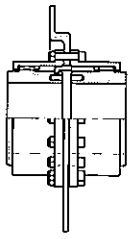

pag. **17** GO-A.DT & GO-A.DF Couplings

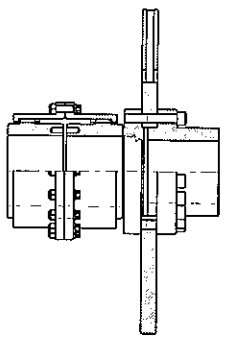

pag. **18,19** GO-A.DFV & GO-A.DFP Couplings

INDEX

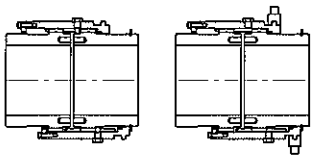

pag. **20** GO-AH.MN & GO-AH.CL Couplings

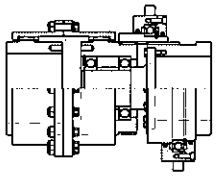

pag. **21** GO-AH.RO Couplings

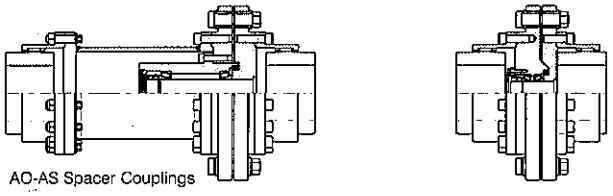

AO-AS Spacer Couplings

AO-FAS Floating Shaft Couplings

pag. **22,23** GO-ASX Couplings + AO-AS & AO-FAS Spacer and Floating Shaft Couplings

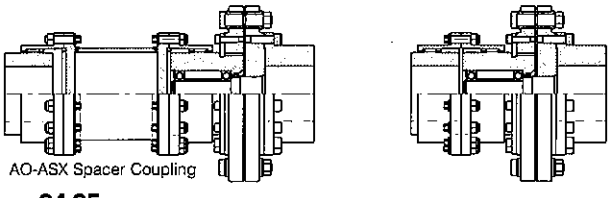

AO-ASX Spacer Coupling

pag. **24,25** GO-ASX Couplings + AO-ASX Spacer Couplings

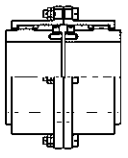

pag. **26** GO-APR Couplings

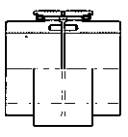

pag. **27** GO-MA Couplings

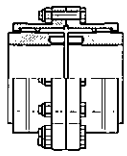

pag. **28** AGMA-N, AGMA-R & AGMA-RR Couplings

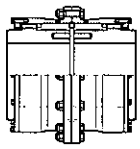

pag. **29** SID-N, SID-R & SID-RR Couplings

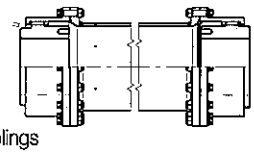

pag. **30** AO-HLC & AO-HLR Spacer Couplings

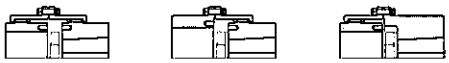

pag. **31** Mill Motor AISE 600-800 Series Couplings

pag. **32** GO-A.W Hubs Shrinkfitting Details

pag. **33** GO-A Flange & Keyway Details

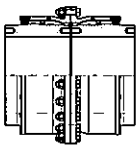

pag. **34,35** GO-B & GO-B.HT Couplings

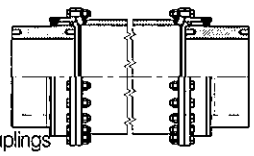

pag. **36,37** AO-B & AO-B.HT Spacer Couplings

AO-FB.C & AO-FB.HT.C Floating Shaft Coupling

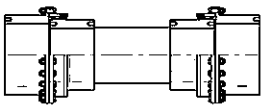

AO-FB.D & AO-FB.HT.D Floating Shaft Coupling

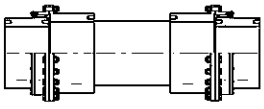

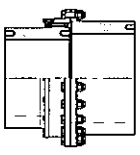

pag. **38,39** GO-FB & GO-FB.HT Couplings + AO-FB Floating Shaft Couplings

INDEX

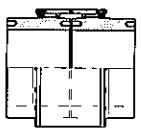

pag. **40,41** GO-MB & GO-MB.HT Couplings

pag. **42** GO-B.W Couplings - Hubs Shrinkfitting Details

pag. **43** GO-B.HT.W Couplings - Hubs Shrinkfitting Details

pag. **44** GO-B Flange & Keyway Details

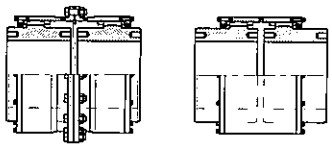

pag. **45** Couplings G20-F & G20-M

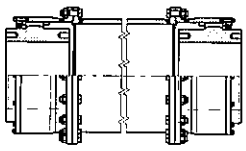

pag. **46** G20-FS Spacer Couplings

G20-FR.C Floating Shaft Couplings

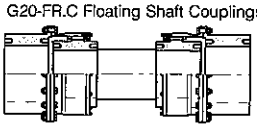

G20-FR.D Floating Shaft Couplings

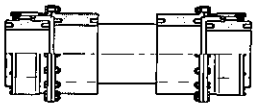

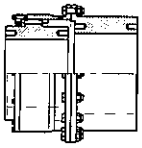

pag. **47** G20-FR Couplings + G20-FR Floating Shaft Couplings

pag. **48** G20-F.W Couplings - Hubs Shrinkfitting Details

pag. **49** G20 Couplings - Flange & Keyway Details

G35-FS & G60-FS Spacer Shaft Coupling

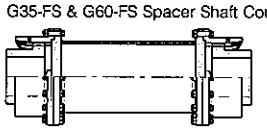

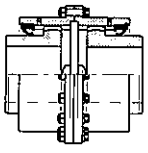

G35-FR & G60-FR Floating Shaft Coupling

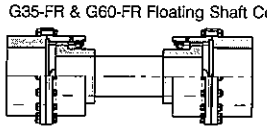

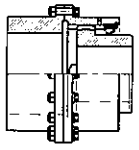

pag. **50,51** G35/G60-F & G35/G60-FR Couplings + G35 & G60 Spacer and Floating Shaft Coupling

G35-M.FF & G60-M.FF Floating Shaft Coupling

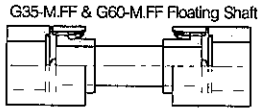

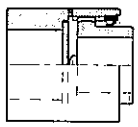

G35-M.FS & G60-M.FS Floating Shaft Coupling

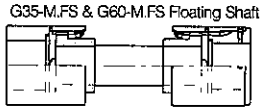

G35-M.SS & G60-M.SS Floating Shaft Coupling

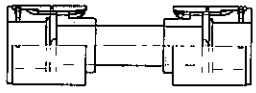

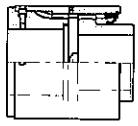

pag. **50,51** G35/G60 Couplings + G35/G60 Floating Shaft Couplings

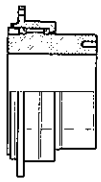

pag. **52,53** GTS Gear Couplings for Hoist Barrels

pag. **54,55,56,57e 58** Installation, Use & Maintenance Instructions

pag. **59** Bore Designs

pag. **60** Special Designs

GO-A, GO-B, GO-B.HT & G20 COUPLINGS

LOAD DATA:		
P	= ABSORBED AND/OR INSTALLED POWER	[kW]
n	= OPERATING SPEED	[1/min]
KS	= OVERLOAD FACTOR	[-]
FS	= SERVICE FACTOR, TAB 00	[-]
D,L	= DIAMETER, LENGHT OF THE SHAFTS TO BE CONNECTED	[mm]
LA	= DISTANCE BETWEEN SHAFT ENDS	[mm]
Tn	$= \frac{P \times 30}{n \times \pi}$ = DRIVE NOMINAL TORQUE	[kNm]

VERIFY THAT:				
COUPLING NOMINAL TORQUE	**Tk**	[kNm]	≥	**Tn x FS/Ki**
COUPLING MAX TORQUE	**Tf**	[kNm]	≥	**Tn x KS/Ki**
COUPLING MAX SPEED	**nk**	[1/min]	≥	**n/Kv**
COUPLING MAX BORE	**d**	[mm]	≥	**D**

Ki = TORQUE REDUCTION FACTOR: pag. 02,03,04,05

Kv = SPEED REDUCTION FACTOR: pag. 02,03,04,05

COUPLING SELECTION

For a correct Service Factor **FS** it is necessary to know the following preliminary data:

- Type of Driving Machine
- Type of Driven Machine
- Duration and Type of the Daily Service
- Reversible Service Under Load
- Presence of Shocks or Very High Load Peaks
- Possibility of Operating Unit Shutdown

>FOR HEAVY DUTY APPLICATIONS <
> CONTACT OUR ENGINEERING STAFF<

TAB. 01

Max Dynamic Angle "GO-A Standard" = 0°10'
Max Dynamic Angle "GO-A with N.O." = 0°15'
Max Static Angle = 1°00'

GO-A SIZE	NOMINAL TORQUE **Tk** [kNm]	MAX TORQUE **Tf** [kNm]	MAX SPEED **nk** [1/min]	MAX BORE **d** [mm]
0	1.80	4.32	6000	52
1	2.76	6.62	4620	62
2	5.55	13.30	4140	78
3	8.70	20.90	4000	98
4	14.10	33.80	3860	112
5	22.80	54.70	3720	132
6	34.80	83.50	3190	156
7	44.00	105.6	2900	174
8	69.80	167.5	2570	190
9	83.80	201.2	2330	210
10	152.0	364.8	2150	233
11	203.5	488.4	1800	280

TAB. 02

Max Dynamic Angle "G-20" = 0°30'
Max Static Angle = 2°30'

G20 SIZE	NOMINAL TORQUE **Tk** [kNm]	MAX TORQUE **Tf** [kNm]	MAX SPEED **nk** [1/min]	MAX BORE **d** [mm]
12	14.2	21.3	6980	75
14	22.3	33.5	5650	90
17	33	49.5	4720	105
19	55	82.5	4030	120
23	84	126	3300	145
26	123	184.5	2790	170
30	197	295.5	2360	195
35	284	426	1990	230
40	408	612	1710	260
46	615	922	1460	300
52	850	1275	1260	340
58	1145	1718	1110	380

TAB. 00

SERVICE FACTORS - FS

SERVICE TYPE	Electric Motor Steam Turbine	Diesel Motor Hydraulic Turbine
UNIFORM	1.25	1.50
LIGHT	1.50	2.00
MEDIUM	2.00	2.50
HEAVY	2.50	3.00
VERY HEAVY	3.00	—

TAB. 03

Max Dynamic Angle "GO-B & GO-B.HT" = 0°15'
Max Static Angle = 1°00'

GO-B GO-B.HT SIZE	MAX BORE **d** [mm]	GO-B NOMINAL TORQUE **Tk** [kNm]	GO-B MAX TORQUE **Tf** [kNm]	GO-B MAX SPEED **nk** [1/min]	GO-B.HT NOMINAL TORQUE **Tk** [kNm]	GO-B.HT MAX TORQUE **Tf** [kNm]	GO-B.HT MAX SPEED **nk** [1/min]
4	325	277	554	1140	417	834	1950
5	370	383	766	1010	563	1126	1730
6	400	493	986	920	745	1490	1570
7	430	660	1320	810	980	1960	1380
8	475	840	1680	720	1235	2470	1230
9	510	990	1195	670	1455	2910	1150
10	530	1195	2390	630	1785	3570	1080
11	580	1555	3110	560	2290	4580	960
12	610	1815	3630	530	2670	5340	900
13	680	2510	5020	470	3790	7580	800
14	780	3530	7060	400	5260	10520	690
15	860	4440	8880	360	6540	13080	620
16	950	5920	11840	320	8750	17500	550
17	1020	7180	14360	300	10580	21160	510
18	1090	8500	17000	270	12540	25080	470
19	1180	10600	21200	250	15630	31260	430

GO-A, AO-A & GO-A.HT COUPLINGS

TECHNICAL DATA

Max Dynamic Angle "GO-A Standard"	= 0°10'
Max Dynamic Angle "GO-A with N.O."	= 0°15'
Max Dynamic Angle "GO-A.HT"	= 0°15'
Max Static Angle	= 1°00

Balancing Classes as PFB 1113 (References: ISO1940 - AGMA9000-C90)	n ≤	450	[1/min]	Not Necessary
	n ≤	900	[1/min]	G 16 Floating Part
	n ≤	1800	[1/min]	G 6.3 Floating Part
	n ≤	3400	[1/min]	G 2.5 Floating Part & Hubs
	n >	3400	[1/min]	Special

TAB. 04

Mat. AISI 1045

SIZE	GO-A & AO-A NOMINAL TORQUE [kNm] Tk	MAX TORQUE [kNm] Tf	MAX SPEED [1/min] nk
0	1.80	4.32	6000
1	2.76	6.62	4620
2	5.55	13.30	4140
3	8.70	20.90	4000
4	14.10	33.80	3860
5	22.80	54.70	3720
6	34.80	83.50	3190
7	44.00	105.6	2900
8	69.80	167.5	2570
9	83.80	201.2	2330
10	152.0	364.8	2150
11	203.5	488.4	1800

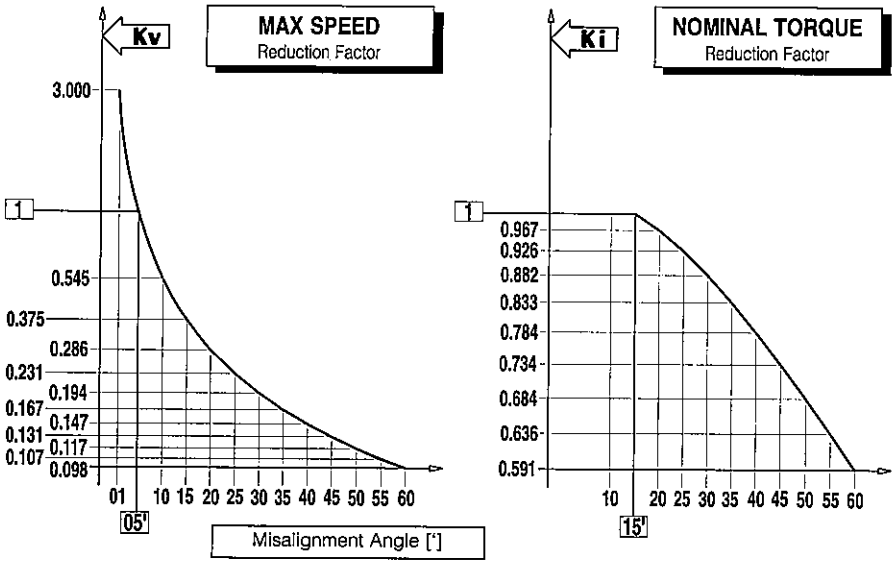

TAB. 05

Mat. AISI 4140 Gas Nitrided

SIZE	GO-A.HT NOMINAL TORQUE [kNm] Tk	MAX TORQUE [kNm] Tf	MAX SPEED [1/min] nk
3	18	36	7500
4	27	54	6150
5	42	84	4700
6	74	148	4070
7	108	216	3400
8	130	260	3070
9	210	420	2720
10	260	520	2420
11	320	640	2200

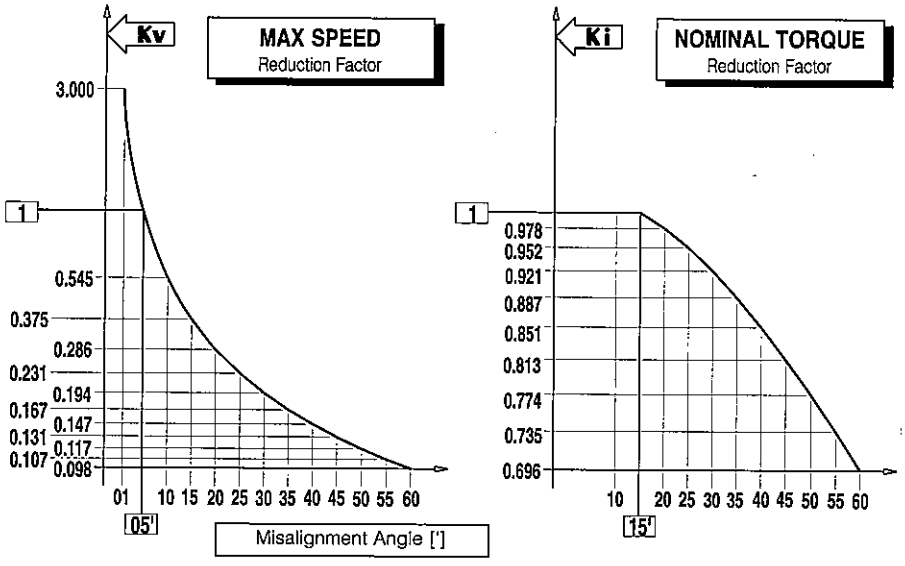

TECHNICAL DATA

GO-B, AO-B, GO-B.HT & AO-B.HT COUPLINGS

Max dynamic angle "GO-B & GO-B.HT" = 0°15'

Max Static Angle = 1°00

Balancing Classes as PFB 1113 (References: ISO1940 - AGMA9000-C90)				
	n ≤	450	[1/min]	Not Necessary
	n ≤	900	[1/min]	G 16 Floating Part
	n ≤	1800	[1/min]	G 6.3 Floating Part
	n ≤	3400	[1/min]	Not Applicable
	n >	3400	[1/min]	Not Applicable

TAB. 06

Mat. AISI 1045

SIZE	GO-B & AO-B NOMINAL TORQUE [kNm] Tk	MAX TORQUE [kNm] Tf	MAX SPEED [1/min] nk
4	277	554	1140
5	383	766	1010
6	493	986	920
7	660	1320	810
8	840	1680	720
9	990	1980	670
10	1195	2390	630
11	1555	3110	560
12	1815	3630	530
13	2510	5020	470
14	3530	7060	400
15	4440	8880	360
16	5920	11840	320
17	7180	14360	300
18	8500	17000	270
19	10600	21200	250

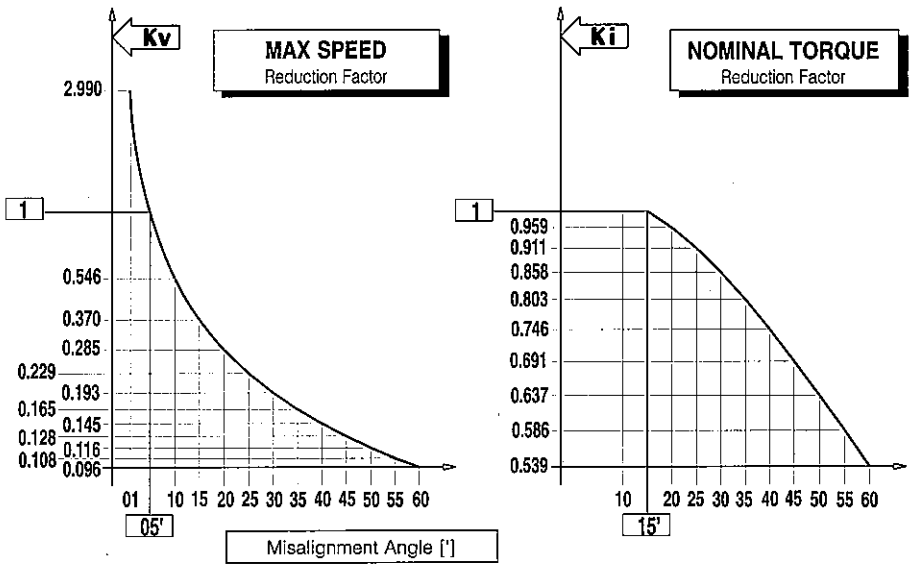

TAB. 07

Mat. AISI 4140

SIZE	GO-B.HT & AO-B.HT NOMINAL TORQUE [kNm] Tk	MAX TORQUE [kNm] Tf	MAX SPEED [1/min] nk
4	417	834	1950
5	563	1126	1730
6	745	1490	1570
7	980	1960	1380
8	1235	2470	1230
9	1455	2910	1150
10	1785	3570	1080
11	2290	4580	960
12	2670	5340	900
13	3790	7580	800
14	5260	10520	690
15	6540	13080	620
16	8750	17500	550
17	10580	21160	510
18	12540	25080	470
19	15630	31260	430

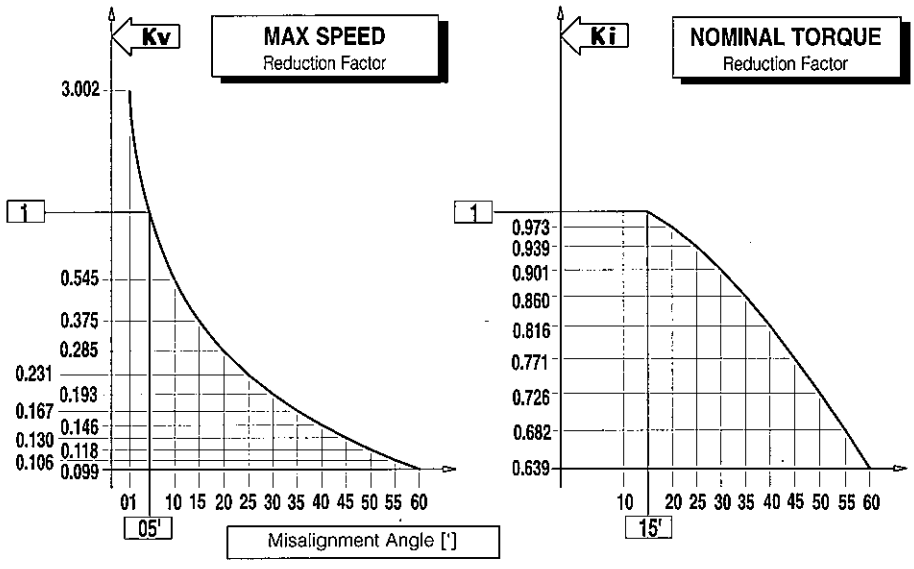

G20-F, G20-FS & G20-FR COUPLINGS

TECHNICAL DATA

Reference Angle	= 0°30'
Max Dynamic Angle	= 2°00'
Max Static Angle	= 2°30'

Balancing Classes as PFB 1113 (References: ISO1940 - AGMA9000-C90)	n ≤	450	[1/min]	Not Necessary
	n ≤	900	[1/min]	G 16 Floating Part
	n ≤	1800	[1/min]	G 6.3 Floating Part
	n ≤	3400	[1/min]	G 2.5 Floating Part & Hubs
	n >	3400	[1/min]	Special

TAB. 08

Mat. AISI 4140 Gas Nitrided

SIZE	G20-F & G20-FS NOMINAL TORQUE [kNm] Tk	MAX TORQUE [kNm] Tf	MAX SPEED [1/min] nk
12	14.2	21.3	6980
14	22.3	33.5	5650
17	33	49.5	4720
19	55	82.5	4030
23	84	126	3300
26	123	185	2790
30	197	296	2360
35	284	426	1990
40	408	612	1710
46	615	922	1460
52	850	1275	1260
58	1145	1718	1110

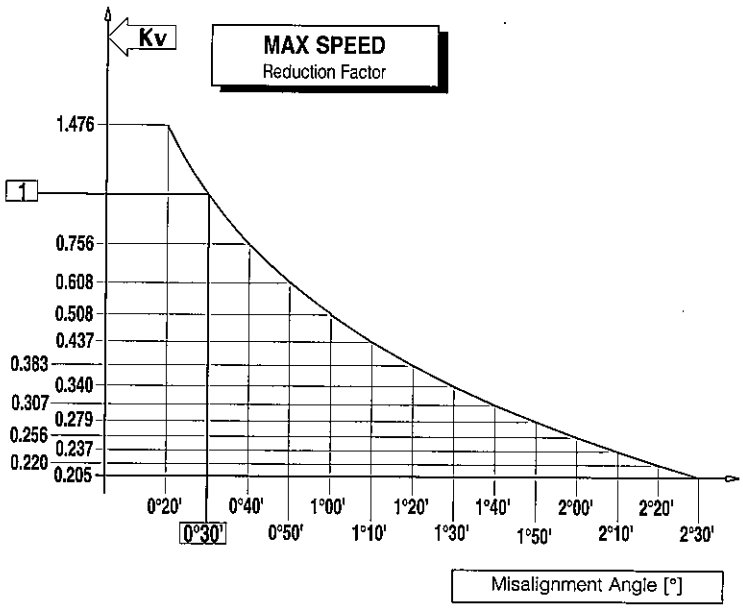

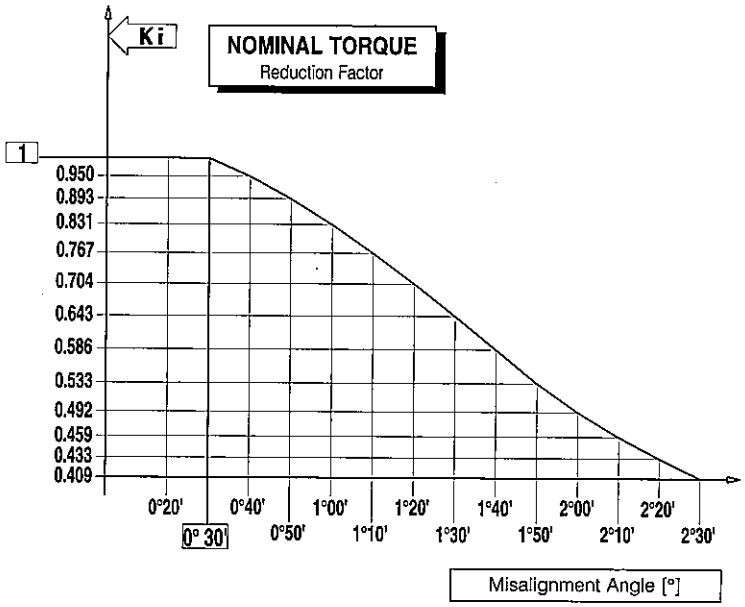

Balancing Classes as PFB 1113 (References: ISO1940 - AGMA9000-C90)	n ≤	450	[1/min]	Not Necessary
	n ≤	900	[1/min]	G 16 Floating Part
	n ≤	1800	[1/min]	G 6.3 Floating Part
	n ≤	3400	[1/min]	Not Applicable
	n >	3400	[1/min]	Not Applicable

TAB. 09

Mat. AISI 4140 Gas Nitrided

G35

Reference Angle = 1°30'
Max Dynamic Angle = 3°30'
Max Static Angle = 3°30'

SIZE	G35-F, FR & M NOMINAL TORQUE [kNm] Tk	MAX TORQUE [kNm] Tf	MAX SPEED [1/min] nk
10	4.05	8.10	3250
20	10.3	20.6	2360
30	16.4	32.8	1810
40	29.5	59.0	1530
50	39.5	79.0	1290
60	72.0	144.0	1090
70	102.0	204.0	950
80	134.0	268.0	850
90	168.0	336.0	760
100	230.0	460.0	680
110	275.0	550.0	560

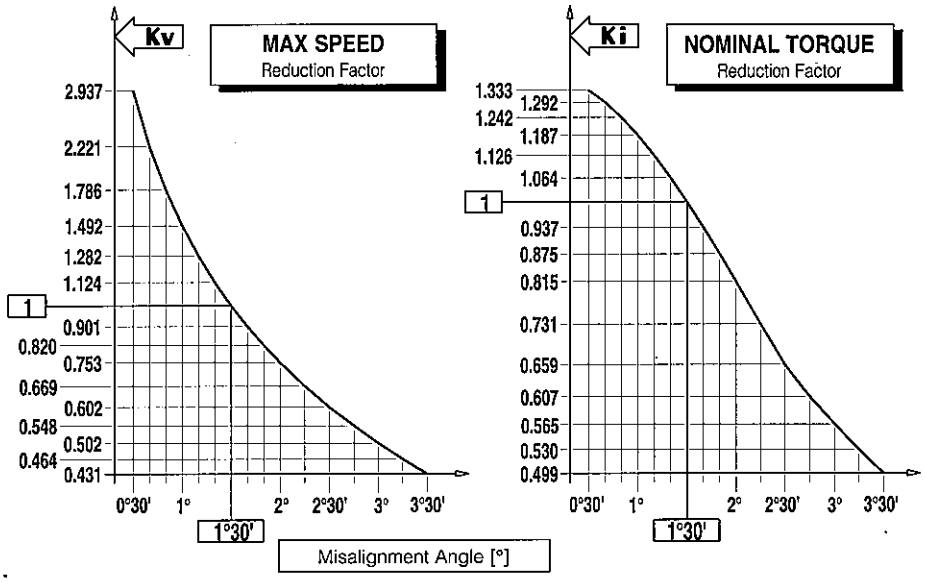

TAB. 10

Mat. AISI 4140 Gas Nitrided

G60

Reference Angle = 1°30'
Max Dynamic Angle = 6°00'
Max Static Angle = 6°00'

SIZE	G60-F, FR & M NOMINAL TORQUE [kNm] Tk	MAX TORQUE [kNm] Tf	MAX SPEED [1/min] nk
10	2.40	4.80	3250
20	5.95	11.9	2360
30	9.40	18.8	1810
40	17.0	34.0	1530
50	23.0	46.0	1290
60	43.0	86.0	1090
70	61.0	122.0	950
80	76.0	152.0	850
90	90.0	180.0	760
100	140.0	280.0	680
110	155.0	310.0	560

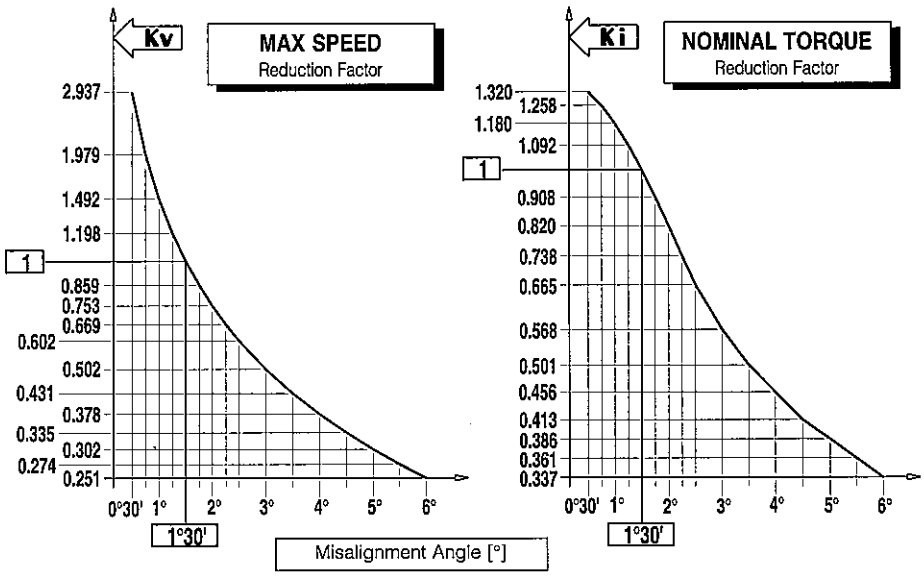

GO-A, GO-AR & GO-ARR COUPLINGS

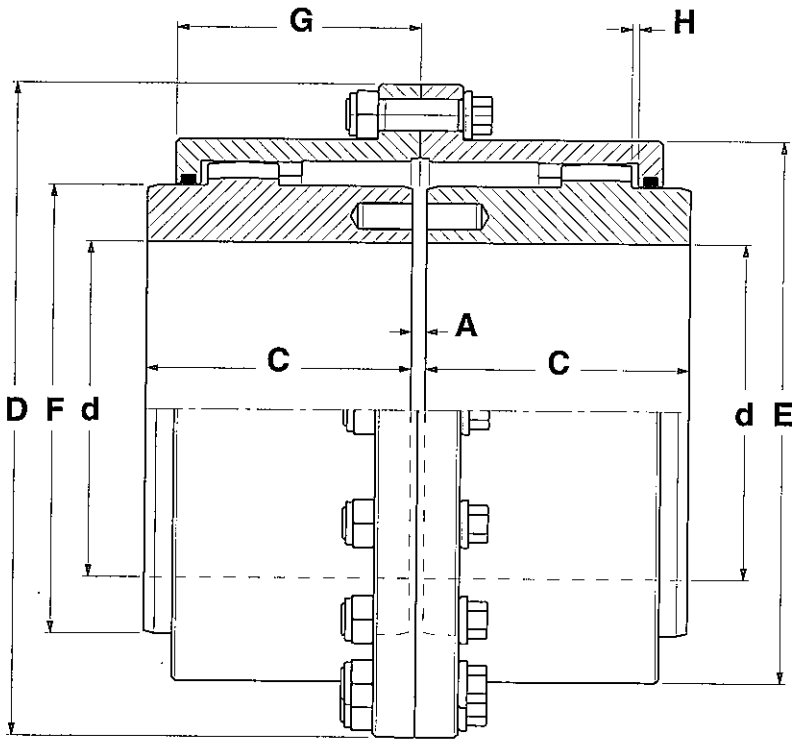

Fig. 01 - GO-A Coupling

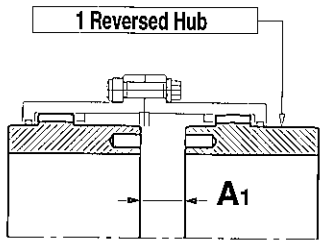

Fig. 02 - GO-AR Coupling

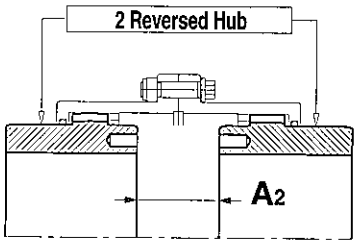

Fig. 03 - GO-ARR Coupling

DENOMINATION EXAMPLE:
GO-A GEAR COUPLING SIZE 6

GO-6A Coupling

TAB. 11

SIZE	NOMINAL TORQUE [kNm] Tk	MAX TORQUE [kNm] Tf	MAX SPEED [1/min] nk	MIN MAX [mm] d	DIMENSIONS [mm] D	C	A	A1	A2	E	F	G	H	MASS ① M [Kg]	MOMENT OF INERTIA ① J [Kgm²]	GREASE QUANTITY [Kg]	TORSIONAL STIFFNESS ① Kx10⁶ [Nm/rad]
0	1.80	4.32	6000	12-52	111	43	3	5	7	82.5	69	39	1.5	4.3	0.005	0.08	4.360
1	2.76	6.62	4620	18-62	142	50	3	8	13	104.5	85	45.5	1.5	7.5	0.012	0.09	7.310
2	5.55	13.30	4140	28-78	168	62	3	14	25	130.5	107	59	1.5	13.5	0.033	0.16	13.45
3	8.70	20.90	4000	40-98	200	76	5	12	19	158.5	133	68.5	2.5	25	0.085	0.27	24.58
4	14.10	33.80	3860	50-112	225	90	5	24	43	183.5	152	82.5	2.5	37	0.163	0.47	30.34
5	22.80	54.70	3720	60-132	265	105	6	27	48	211.5	178	93	3	60	0.376	0.68	47.68
6	34.80	83.50	3190	70-156	300	120	6	32	58	245.5	209	106	3	90	0.727	0.93	68.27
7	44.00	105.6	2900	85-174	330	135	8	37	66	275	234	118	4	124	1.226	1.54	97.85
8	69.80	167.5	2570	95-190	370	150	8	50	92	307	254	138	4	170	2.099	2.28	136.1
9	83.80	201.2	2330	110-210	406	175	8	53	98	335	279	154	4	233	3.390	3.10	159.9
10	152.0	364.8	2150	120-233	438	190	8	58	108	367	305	166	4	298	5.053	3.90	203.3
11	203.5	488.4	1800	130-280	505	220	10	72	134	423	355	193	5	457	10.33	6.20	283.0

NOTE 1 - Values are calculated for solid hub.

TECHNICAL DATA

GO-A.HT COUPLINGS

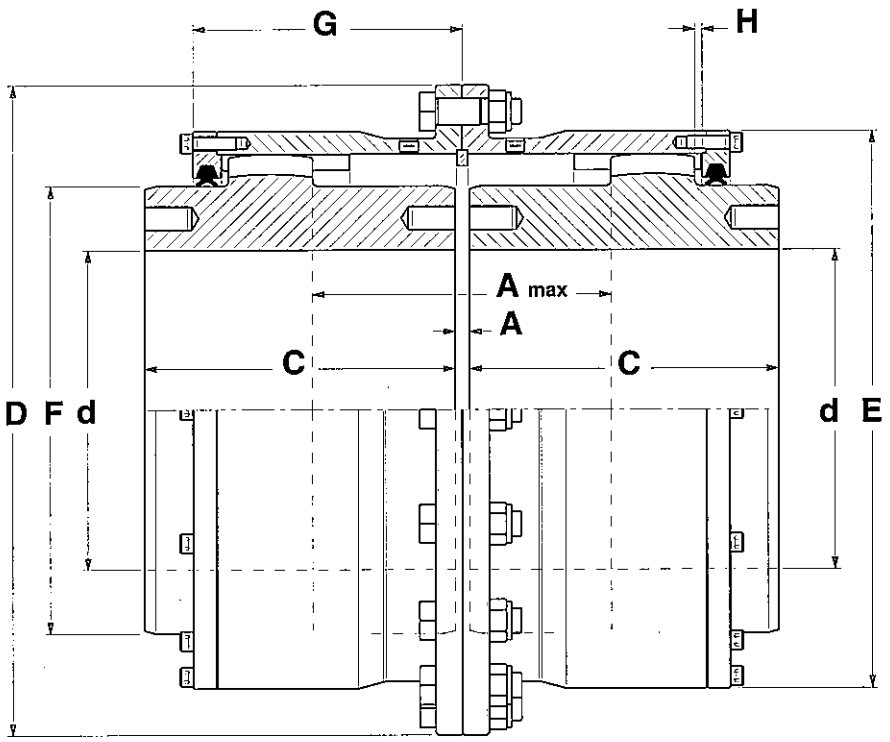

DENOMINATION EXAMPLE:
GO-A.HT GEAR COUPLING SIZE 6
GO-6A.HT Coupling

Fig. 04 - GO-A.HT Coupling

TAB. 12

SIZE	NOMINAL TORQUE [kNm] **Tk**	MAX TORQUE [kNm] **Tf**	MAX SPEED [1/min] **nk**	MAX [mm] **d**	DIMENSIONS [mm] **D**	**C**	**A**	**max A**	**E**	**F**	**G**	**H**	GREASE QUANTITY [Kg]
3	18	36	7500	82	200	90	5	62	160	112	74	3	0.4
4	27	54	6150	100	225	105	5	82	184	136	88	3	0.7
5	42	84	4700	130	265	120	6	102	224	176	102	3	0.9
6	74	148	4070	145	300	135	6	124	254	196	117	3	1.6
7	108	216	3400	170	336	150	8	134	292	230	129	4	2.2
8	130	260	3070	185	376	180	8	152	319	254	144	4	2.9
9	210	420	2720	200	410	200	8	160	353	274	164	4	5.0
10	260	520	2420	225	444	230	8	174	387	306	179	4	6.5
11	320	640	2200	250	512	250	10	218	421	338	210	5	8.2

GO-AMM, GO-AM & GO-AMR COUPLINGS

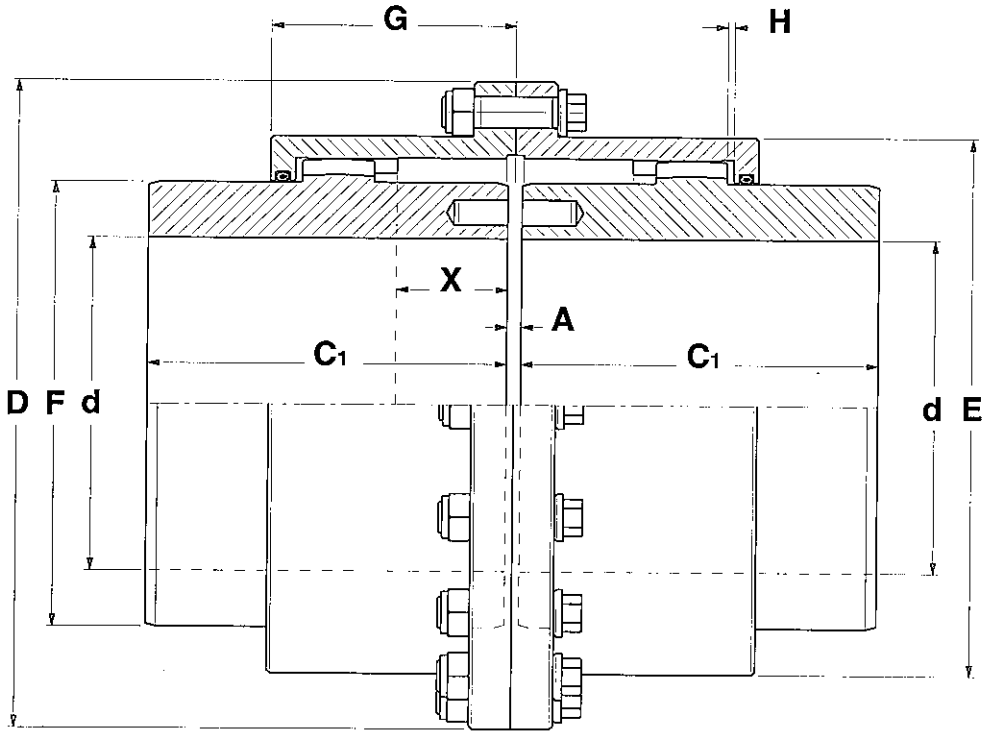

Fig. 05 - GO-AMM Coupling

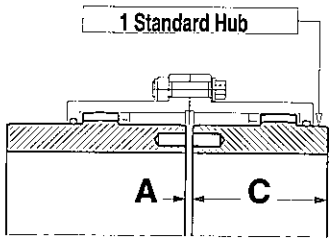

Fig. 06 - GO-AM Coupling

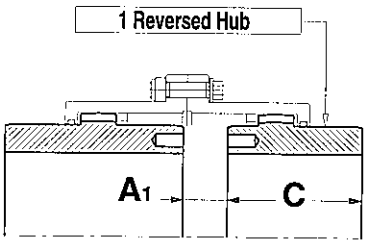

Fig. 07 - GO-AMR Coupling

DENOMINATION EXAMPLE:
GO-AMM GEAR COUPLING SIZE 6

GO-6AMM Coupling

TAB. 13

SIZE	NOMINAL TORQUE [kNm] Tk	MAX TORQUE [kNm] Tf	MAX SPEED [1/min] nk	MIN MAX [mm] d	DIMENSIONS [mm] D	C	C1	A	A1	E	F	G	H	MAX X	MASS ① M [Kg]	MOMENT OF INERTIA ① J [Kgm²]	GREASE QUANTITY [Kg]	TORSIONAL STIFFNESS ① Kx10⁶ [Nm/rad]
0	1.80	4.32	6000	12-52	111	43	105	3	5	82.5	69	39	1.5	12	8	0.007	0.08	4.360
1	2.76	6.62	4620	18-62	142	50	115	3	8	104.5	85	45.5	1.5	16	13	0.018	0.09	7.310
2	5.55	13.30	4140	28-78	168	62	130	3	14	130.5	107	59	1.5	22	23	0.046	0.16	13.45
3	8.70	20.90	4000	40-98	200	76	150	5	12	158.5	133	68.5	2.5	26	41	0.120	0.27	24.58
4	14.10	33.80	3860	50-112	225	90	170	5	24	183.5	152	82.5	2.5	38	60	0.229	0.47	30.34
5	22.80	54.70	3720	60-132	265	105	185	6	27	211.5	178	93	3	45	91	0.501	0.68	47.68
6	34.80	83.50	3190	70-156	300	120	215	6	32	245.5	209	106	3	50	141	1.005	0.93	68.27
7	44.00	105.6	2900	85-174	330	135	245	8	37	275	234	118	4	58	199	1.734	1.54	97.85
8	69.80	167.5	2570	95-190	370	150	295	8	50	307	254	138	4	70	285	3.029	2.28	136.1
9	83.80	201.2	2330	110-210	406	175	300	8	53	335	279	154	4	80	352	4.556	3.10	159.9
10	152.0	364.8	2150	120-233	438	190	305	8	58	367	305	166	4	86	428	6.165	3.90	203.3
11	203.5	488.4	1800	130-280	505	220	310	10	72	423	355	193	5	96	596	12.55	6.20	283.0

NOTE 1 - Values are calculated for solid hub.

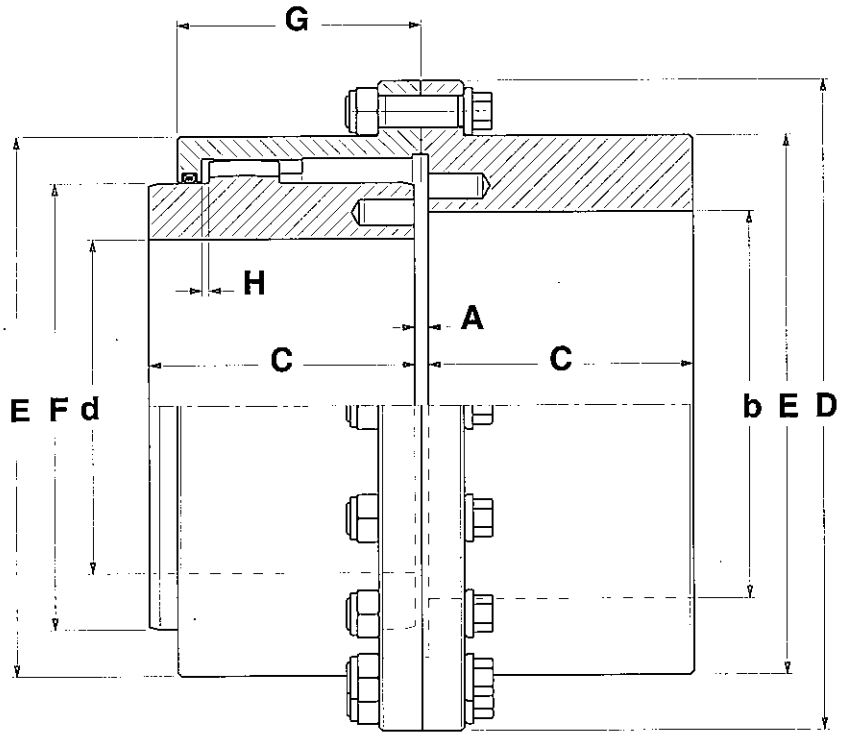

Fig. 08 - GO-FA Coupling

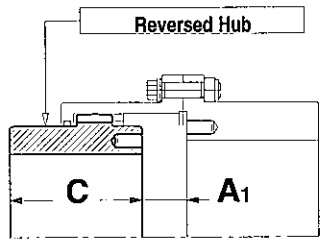

Fig. 09 - GO-FAR Coupling

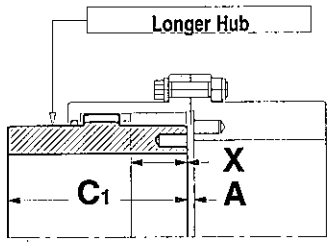

Fig. 10 - GO-FAM Coupling

DENOMINATION EXAMPLE:
GO-FA GEAR COUPLING SIZE 6

GO-6FA Coupling

TAB. 14

SIZE	NOMINAL TORQUE [kNm] Tk	MAX TORQUE [kNm] Tf	MAX SPEED [1/min] nk	MIN MAX [mm] d	MAX [mm] b	DIMENSIONS [mm] D	C	C1	A	A1	E	F	G	H	MAX X	MASS ① M [Kg]	MOMENT OF INERTIA ① J [Kgm²]	GREASE QUANTITY [Kg]	TORSIONAL STIFFNESS ① Kx10⁶ [Nm/rad]
0	1.80	4.32	6000	12-52	60	111	43	105	3	5	82.5	69	39	1.5	12	4.5	0.005	0.04	8.720
1	2.76	6.62	4620	18-62	75	142	50	115	3	8	104.5	85	45.5	1.5	16	8	0.013	0.05	14.62
2	5.55	13.30	4140	28-78	90	168	62	130	3	14	130.5	107	59	1.5	22	14	0.035	0.08	26.90
3	8.70	20.90	4000	40-98	110	200	76	150	5	12	158.5	133	68.5	2.5	26	26	0.091	0.14	49.16
4	14.10	33.80	3860	50-112	130	225	90	170	5	24	183.5	152	82.5	2.5	38	39	0.177	0.24	60.68
5	22.80	54.70	3720	60-132	150	265	105	185	6	27	211.5	178	93	3	45	63	0.407	0.34	95.36
6	34.80	83.50	3190	70-156	175	300	120	215	6	32	245.5	209	106	3	50	95	0.786	0.47	136.5
7	44.00	105.6	2900	85-174	195	330	135	245	8	37	275	234	118	4	58	131	1.331	0.77	195.7
8	69.80	167.5	2570	95-190	220	370	150	295	8	50	307	254	138	4	70	180	2.288	1.14	272.3
9	83.80	201.2	2330	110-210	240	406	175	300	8	53	335	279	154	4	80	248	3.729	1.55	319.9
10	152.0	364.8	2150	120-233	260	438	190	305	8	58	367	305	166	4	86	318	5.609	1.95	406.7
11	203.5	488.4	1800	130-280	300	505	220	310	10	72	423	355	193	5	96	488	10.44	3.10	566.0

NOTE 1 - Values are calculated for solid hub.

AO-A, AO-ARR & AO-AMM SPACER COUPLINGS

Fig. 11 - AO-A Spacer Couplings

LS = LA - A
ID = LS + 2℄

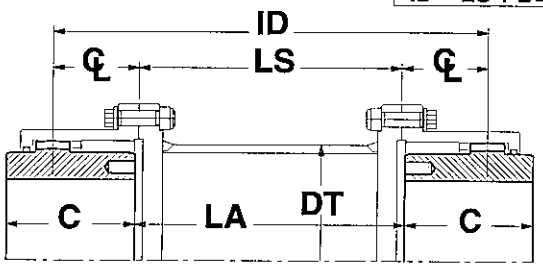

Fig. 12 - AO-ARR Spacer Couplings

LS = LA - A2
ID = LS + 2℄

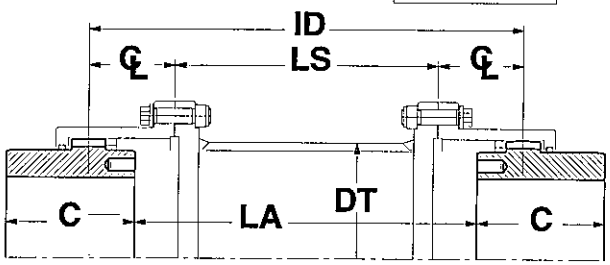

Fig. 13 - AO-AMM Spacer Couplings

LS = LA - A
ID = LS + 2℄

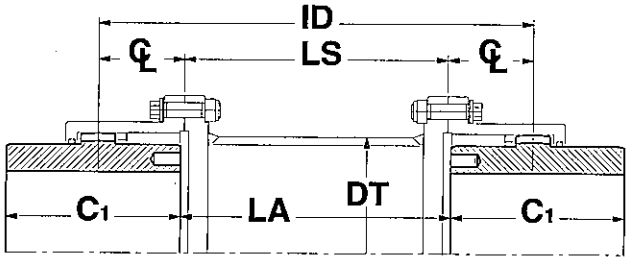

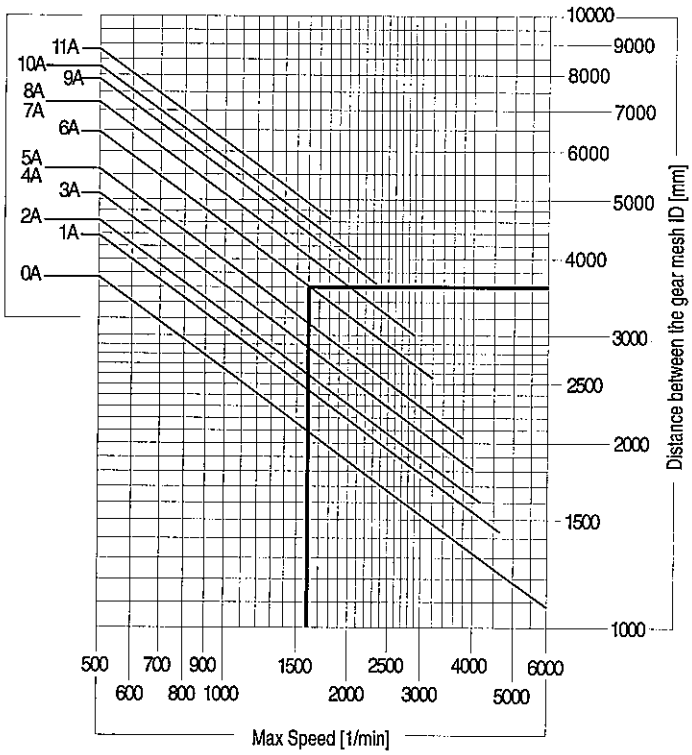

Verification Example:
AO-6A Spacer Coupling with distance between the gear mesh ID=3600 [mm]
In the graph (see bold lines) you can obtain a max working speed of 1600 [1/min]

DENOMINATION EXAMPLE:
AO-A GEAR COUPLING SIZE 6

AO-6A Spacer Couplings

TAB. 15

SIZE	Dimensions [mm] C	C1	A	A2	℄	Standard LS			Min LS	DT	① MASS [Kg] M AO-A AO-ARR	AO-AMM	SPACER 100 mm	① MOMENT OF INERTIA [Kgm²] J AO-A AO-ARR	AO-AMM	SPACER 100 mm	① TORSIONAL STIFFNESS K [Nm/rad] x 10⁶ AO-A..	100 mm	GREASE QUANTITY [Kg]
0	43	105	3	7	24	107	124	175	80	80	22.8	26.5	1.73	0.029	0.031	0.002	0.219	2.282	0.08
1	50	115	3	13	29	107	124	175	90	89	21.5	27	1.19	0.045	0.051	0.003	0.030	2.946	0.09
2	62	130	3	25	38	107	124	175	90	125	32.5	42	1.60	0.091	0.104	0.005	0.489	4.984	0.16
3	76	150	5	19	44	—	122	173	100	140	53.5	70	2.29	0.215	0.250	0.010	1.048	10.69	0.27
4	90	170	5	43	57	—	122	173	100	168	79.5	103	3.54	0.432	0.498	0.022	2.250	23.79	0.47
5	105	185	6	48	66	—	121	172	110	168	113	144	3.54	0.765	0.890	0.022	2.364	23.79	0.68
6	120	215	6	58	76	—	121	172	110	219	155	206	4.17	1.455	1.733	0.046	4.761	49.13	0.93
7	135	245	8	66	86	—	—	—	130	273	212	287	6.17	2.654	3.162	0.107	10.43	113.5	1.54
8	150	295	8	92	100	—	—	—	150	273	270	385	6.17	3.822	4.752	0.107	11.04	113.5	2.28
9	175	300	8	98	114	—	—	—	160	324	356	475	7.04	6.250	7.416	0.183	17.93	193.6	3.10
10	190	305	8	108	124	—	—	—	170	356	438	568	8.11	8.920	10.03	0.243	23.68	256.9	3.90
11	220	310	10	134	146	—	—	—	180	406	662	802	12.3	17.72	19.94	0.478	44.60	505.7	6.20

NOTE 1 - Values are calculated for solid hub and spacer lenght LS = 1000 [mm]

TECHNICAL DATA

AO-FAC & AO-FARC FLOATING SHAFT COUPLINGS

Fig. 14 - AO-FAC Floating Shaft Couplings

LS = LA - A
ID = LS - 2℄

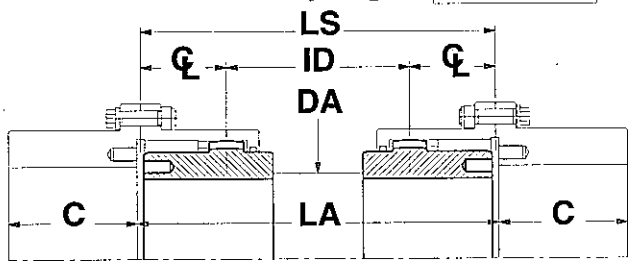

Fig. 15 - AO-FARC Floating Shaft Couplings

LS = LA - A
ID = LS - 2℄

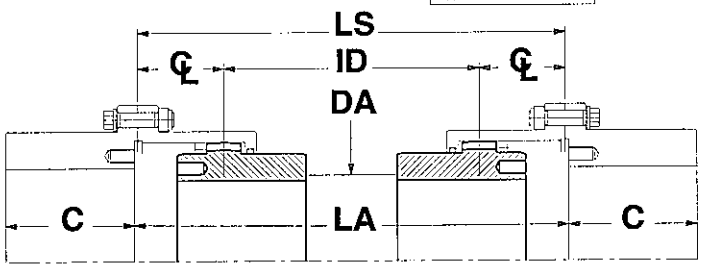

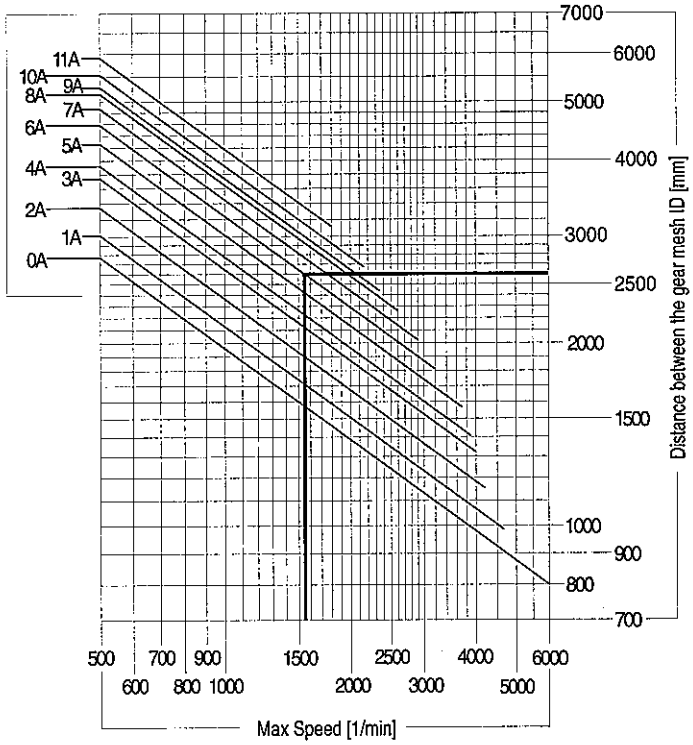

Verification Example:
AO-6A Spacer Coupling with distance between the gear mesh ID=3600 [mm]
In the graph (see bold lines) you can obtain a max working speed of 1600 [1/min]

DENOMINATION EXAMPLE:
GO-FAC GEAR COUPLING SIZE 6

AO-6FAC Floating Shaft Couplings

TAB. 16

SIZE	Dimensions [mm] C	A	℄	Min LS	DA	① MASS [Kg] M AO-FAC	AO-FARC	SHAFT 100 mm	① MOMENT OF INERTIA [Kgm²] J AO-FAC	AO-FARC	SHAFT 100 mm	① TORSIONAL STIFFNESS K [Nm/rad] x 10⁶ AO-FA..	100 mm	GREASE QUANTITY [Kg]
0	43	3	24	140	55	26.0	25.9	1.86	0.016	0.016	0.001	0.074	0.720	0.08
1	50	3	29	170	65	39.4	39.1	2.61	0.038	0.038	0.001	0.146	1.404	0.09
2	62	3	38	220	80	62.4	61.6	3.95	0.098	0.097	0.003	0.340	3.221	0.16
3	76	5	44	250	100	104.0	103.1	6.16	0.247	0.246	0.008	0.833	7.865	0.27
4	90	5	57	320	110	138.8	136.0	7.46	0.446	0.442	0.011	1.246	11.51	0.47
5	105	6	66	370	130	207.7	203.3	10.42	0.987	0.887	0.022	2.455	22.46	0.68
6	120	6	76	430	150	294.6	287.4	13.87	1.866	1.846	0.039	4.393	39.81	0.93
7	135	8	86	480	170	390.6	380.3	17.82	3.127	3.089	0.064	7.338	65.69	1.54
8	150	8	100	550	190	514	495	22.26	5.271	5.187	0.100	11.71	102.5	2.28
9	175	8	114	630	200	654	632	24.66	8.250	8.139	0.123	14.79	125.8	3.10
10	190	8	124	690	220	819	789	29.84	12.32	12.14	0.181	21.86	184.2	3.90
11	220	10	146	800	250	1188	1140	38.53	24.54	24.16	0.301	37.62	307.2	6.20

NOTE 1 - Values are calculated for solid hub and floating shaft lenght LS = 1000 [mm]

GO-AV COUPLINGS & AO-AV SPACER COUPLINGS

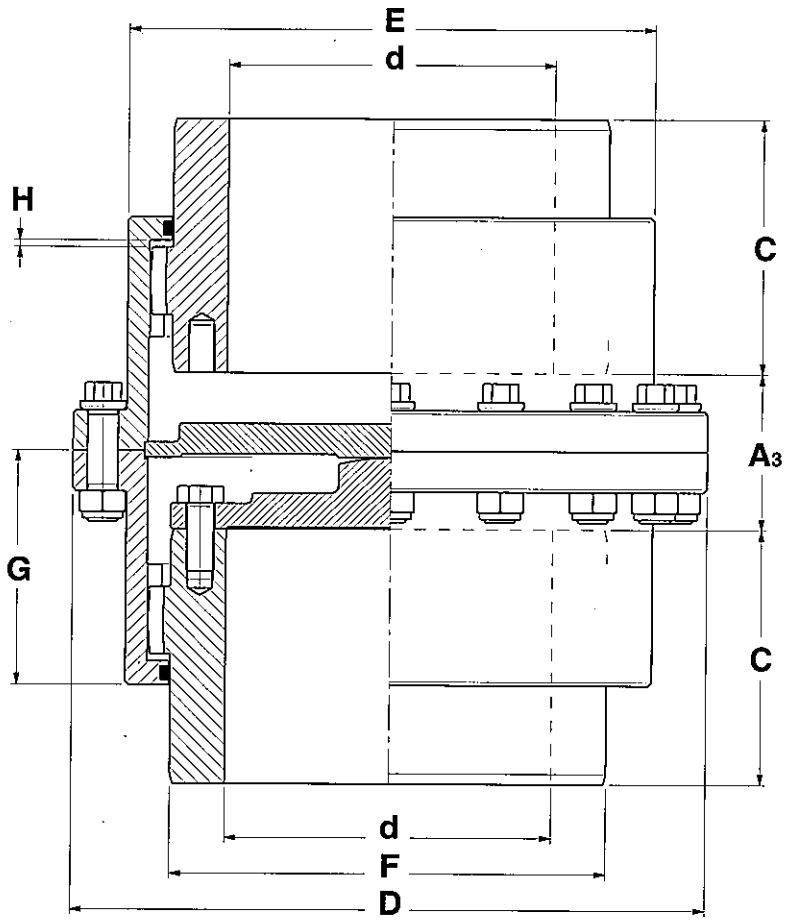

Fig. 16 - GO-AV Coupling

Shaft Diameter	M	N
from 24 to 30	M10	22
from 30 to 38	M12	28
from 38 to 50	M16	36
from 50 to 85	M20	42
from 85 to 130	M24	50
from 130 to160	M30	60
from 160 to 200	M36	80
from 200 to 250	M48	100
from 250 to 300	M56	125

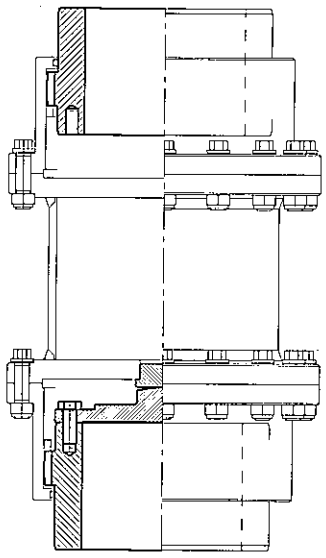

Fig. 17 - AO-AV Spacer Couplings

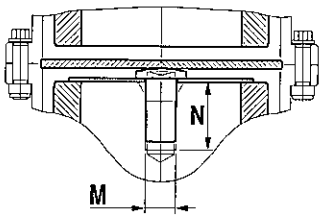

DENOMINATION EXAMPLE:
GO-AV GEAR COUPLING SIZE 6

GO-6AV Coupling

TAB. 17

SIZE	NOMINAL TORQUE [kNm] Tk	MAX TORQUE [kNm] Tf	MAX SPEED [1/min] nk	MIN MAX [mm] d	DIMENSIONS [mm] D	C	A3	E	F	G	H	MASS ① M [Kg]	MOMENT OF INERTIA ① J [Kgm²]	GREASE QUANTITY [Kg]	TORSIONAL STIFFNESS ① Kx10⁶ [Nm/rad]
0	1.80	4.32	6000	12-52	111	43	23	82.5	69	39	1.5	4.3	0.005	0.08	4.360
1	2.76	6.62	4620	18-62	142	50	23	104.5	85	45.5	1.5	7.5	0.012	0.09	7.310
2	5.55	13.30	4140	28-78	168	62	31	130.5	107	59	1.5	13.5	0.033	0.16	13.45
3	8.70	20.90	4000	40-98	200	76	31	158.5	133	68.5	2.5	25	0.085	0.27	24.58
4	14.10	33.80	3860	50-112	225	90	43	183.5	152	82.5	2.5	37	0.163	0.47	30.34
5	22.80	54.70	3720	60-132	265	105	48	211.5	178	93	3	60	0.376	0.68	47.68
6	34.80	83.50	3190	70-156	300	120	58	245.5	209	106	3	90	0.727	0.93	68.27
7	44.00	105.6	2900	85-174	330	135	66	275	234	118	4	124	1.226	1.54	97.85
8	69.80	167.5	2570	95-190	370	150	92	307	254	138	4	170	2.099	2.28	136.1
9	83.80	201.2	2330	110-210	406	175	98	335	279	154	4	233	3.390	3.10	159.9
10	152.0	364.8	2150	120-233	438	190	108	367	305	166	4	298	5.053	3.90	203.3
11	203.5	488.4	1800	130-280	505	220	134	423	355	193	5	457	10.33	6.20	283.0

NOTE1 - Values are calculated for solid hubs and refer GO-AV couplings only.

Fig. 18 - GO-ASC Coupling

DENOMINATION EXAMPLE:
GO-ASC GEAR COUPLING SIZE 6

GO-6ASC Coupling

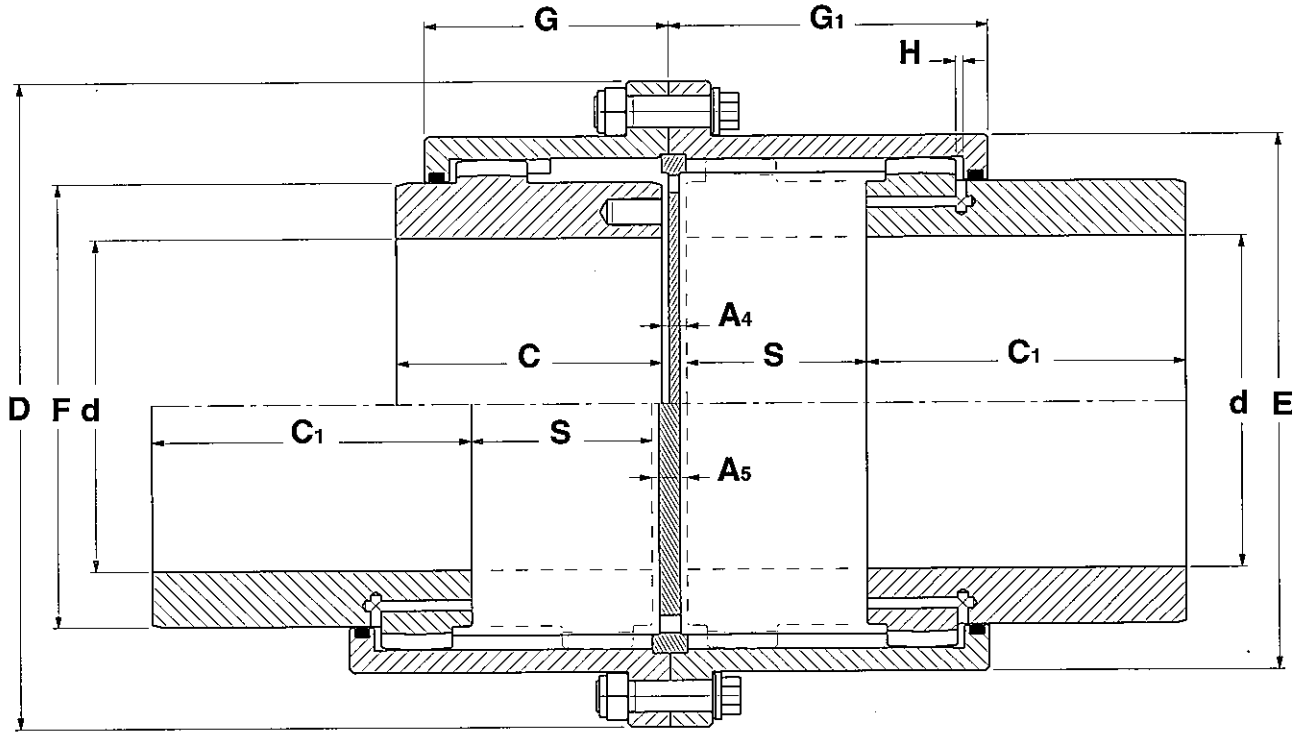

DENOMINATION EXAMPLE:
GO-ASC.D GEAR COUPLING SIZE 6

GO-6ASC.D Coupling

Fig. 19 - GO-ASC.D Coupling

TAB. 18

SIZE	NOMINAL TORQUE [kNm] Tk	MAX TORQUE [kNm] Tf	MAX SPEED [1/min] nk	MIN MAX [mm] d	DIMENSIONS [mm] D	C	C1	E	F	G	G1	H	GREASE QUANTITY [Kg]
0	1.80	4.32	6000	12-52	111	43	100	82.5	69	39	100	1.5	0.08
1	2.76	6.62	4620	18-62	142	50	102	104.5	85	45.5	98.5	1.5	0.09
2	5.55	13.30	4140	28-78	168	62	110	130.5	107	59	106.5	1.5	0.16
3	8.70	20.90	4000	40-98	200	76	122	158.5	133	68.5	119.5	2.5	0.27
4	14.10	33.80	3860	50-112	225	90	130	183.5	152	82.5	122.5	2.5	0.47
5	22.80	54.70	3720	60-132	265	105	144	211.5	178	93	137	3	0.68
6	34.80	83.50	3190	70-156	300	120	156	245.5	209	106	151	3	0.93
7	44.00	105.6	2900	85-174	330	135	162	275	234	118	158	4	1.54
8	69.80	167.5	2570	95-190	370	150	180	307	254	138	181	4	2.28
9	83.80	201.2	2330	110-210	406	175	220	335	279	154	213	4	3.10
10	152.0	364.8	2150	120-233	438	190	220	367	305	166	217	4	3.90
11	203.5	488.4	1800	130-280	505	220	210	423	355	193	209	5	6.20

GO-ASC		GO-ASC.D	
MIN MAX A4	MAX SLIDE S	MIN MAX A5	MAX SLIDE S+S
7-69	62	11-135	124
7-69	62	11-135	124
7-71	64	11-139	128
8-80	72	11-155	144
8-80	72	11-155	144
10-90	80	14-174	160
10-98	88	14-190	176
14-102	88	20-196	176
14-116	102	20-224	204
14-144	130	20-280	260
14-144	130	20-280	260
16-126	110	22-242	220

NOTE 1 - Values are calculated for solid hub.

GO-ACS COUPLINGS

TECHNICAL DATA

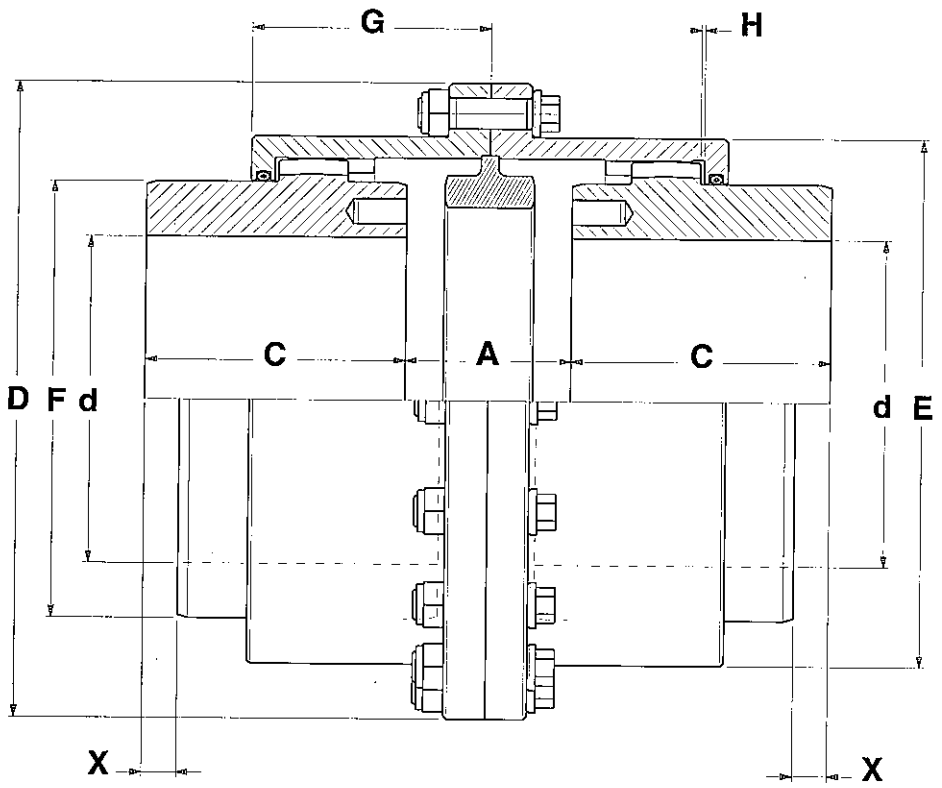

Fig. 20 - GO-ACS Coupling

DENOMINATION EXAMPLE:
GO-ACS GEAR COUPLING SIZE 6

GO-6ACS Coupling

TAB. 19

SIZE	NOMINAL TORQUE [kNm] **Tk**	MAX TORQUE [kNm] **Tf**	MAX SPEED [1/min] **nk**	MIN MAX [mm] **d**	DIMENSIONS [mm] **D**	**C**	Min Max **A**		**E**	**F**	**G**	Min **H**	Max Slide **Xt=X+X**	MASS ① M [Kg]	MOMENT OF INERTIA ① J [Kgm²]	GREASE QUANTITY [Kg]	TORSIONAL STIFFNESS ① Kx10⁶ [Nm/rad]
0	1.80	4.32	6000	12-52	111	43	8	24	82.5	69	39	1	16 = 8+8	4.3	0.005	0.08	4.360
1	2.76	6.62	4620	18-62	142	50	8	24	104.5	85	45.5	1	16 = 8+8	7.5	0.012	0.09	7.310
2	5.55	13.30	4140	28-78	168	62	8	26	130.5	107	59	1	18 = 9+9	13.5	0.033	0.16	13.45
3	8.70	20.90	4000	40-98	200	76	8	30	158.5	133	68.5	1	22=11+11	25	0.085	0.27	24.58
4	14.10	33.80	3860	50-112	225	90	22	46	183.5	152	82.5	1	24=12+12	37	0.163	0.47	30.34
5	22.80	54.70	3720	60-132	265	105	20	52	211.5	178	93	1	32=16+16	60	0.376	0.68	47.68
6	34.80	83.50	3190	70-156	300	120	26	62	245.5	209	106	1	36=18+18	90	0.727	0.93	68.27
7	44.00	105.6	2900	85-174	330	135	38	70	275	234	118	2	32=16+16	124	1.226	1.54	97.85
8	69.80	167.5	2570	95-190	370	150	56	96	307	254	138	2	40=20+20	170	2.099	2.28	136.1
9	83.80	201.2	2330	110-210	406	175	60	102	335	279	154	2	42=21+21	233	3.390	3.10	159.9
10	152.0	364.8	2150	120-233	438	190	64	112	367	305	166	2	48=24+24	298	5.053	3.90	203.3
11	203.5	488.4	1800	130-280	505	220	80	140	423	355	193	2	60=30+30	457	10.33	6.20	283.0

NOTE 1 - Values are calculated for solid hub.

GO-ALGD & GO-ALGE COUPLINGS

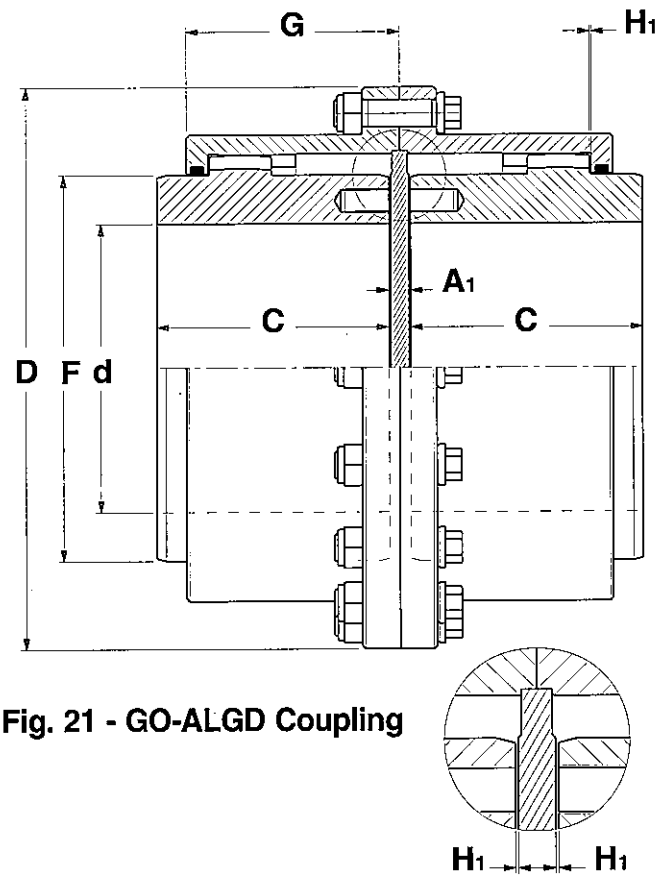

Fig. 21 - GO-ALGD Coupling

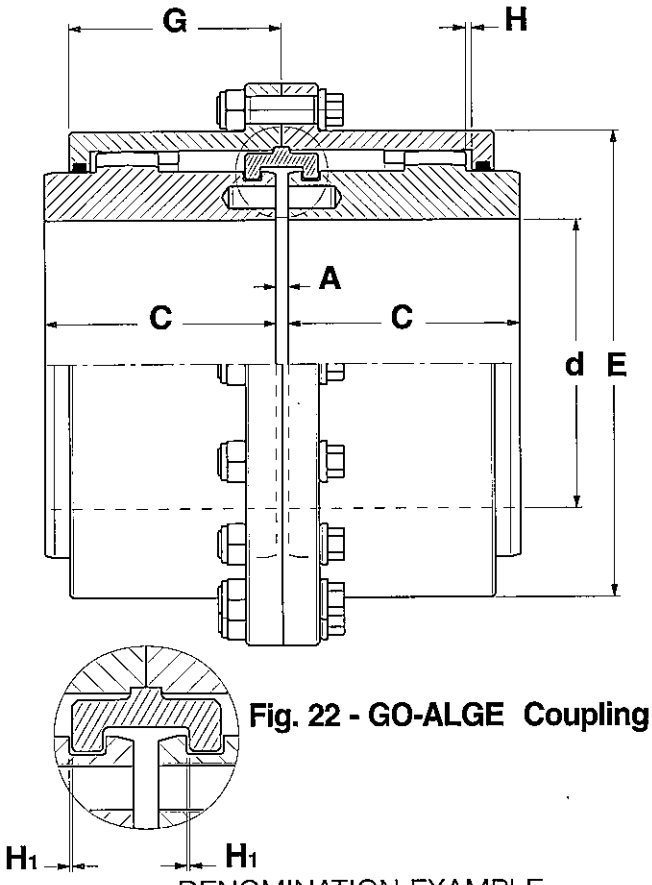

Fig. 22 - GO-ALGE Coupling

DENOMINATION EXAMPLE:
GO-ALGD GEAR COUPLING SIZE 6

GO-6ALGD Coupling

DENOMINATION EXAMPLE:
GO-ALGE GEAR COUPLING SIZE 6

GO-6ALGE Coupling

TAB. 20

SIZE	NOMINAL TORQUE [kNm] Tk	MAX TORQUE [kNm] Tf	MAX SPEED [1/min] nk	MIN MAX [mm] d	DIMENSIONS [mm] D	C	A	A1	E	F	G	H	H1	MASS ① M [Kg]	MOMENT OF INERTIA ① J [Kgm²]	GREASE QUANTITY [Kg]	TORSIONAL STIFFNESS ① Kx10⁶ [Nm/rad]
0	1.80	4.32	6000	12-52	111	43	3	5	82.5	69	39	1.5	0.5	4.3	0.005	0.08	4.360
1	2.76	6.62	4620	18-62	142	50	3	5	104.5	85	45.5	1.5	0.5	7.5	0.012	0.09	7.310
2	5.55	13.30	4140	28-78	168	62	3	5	130.5	107	59	1.5	0.5	13.5	0.033	0.16	13.45
3	8.70	20.90	4000	40-98	200	76	5	8	158.5	133	68.5	2.5	1	25	0.085	0.27	24.58
4	14.10	33.80	3860	50-112	225	90	5	8	183.5	152	82.5	2.5	1	37	0.163	0.47	30.34
5	22.80	54.70	3720	60-132	265	105	6	10	211.5	178	93	3	1	60	0.376	0.68	47.68
6	34.80	83.50	3190	70-156	300	120	6	10	245.5	209	106	3	1	90	0.727	0.93	68.27
7	44.00	105.6	2900	85-174	330	135	8	14	275	234	118	4	1	124	1.226	1.54	97.85
8	69.80	167.5	2570	95-190	370	150	8	14	307	254	138	4	1	170	2.099	2.28	136.1
9	83.80	201.2	2330	110-210	406	175	8	14	335	279	154	4	1	233	3.390	3.10	159.9
10	152.0	364.8	2150	120-233	438	190	8	14	367	305	166	4	1	298	5.053	3.90	203.3
11	203.5	488.4	1800	130-280	505	220	10	18	423	355	193	5	1	457	10.33	6.20	283.0

NOTE 1 - Values are calculated for solid hub.

GO-A.FF COUPLINGS

TECHNICAL DATA

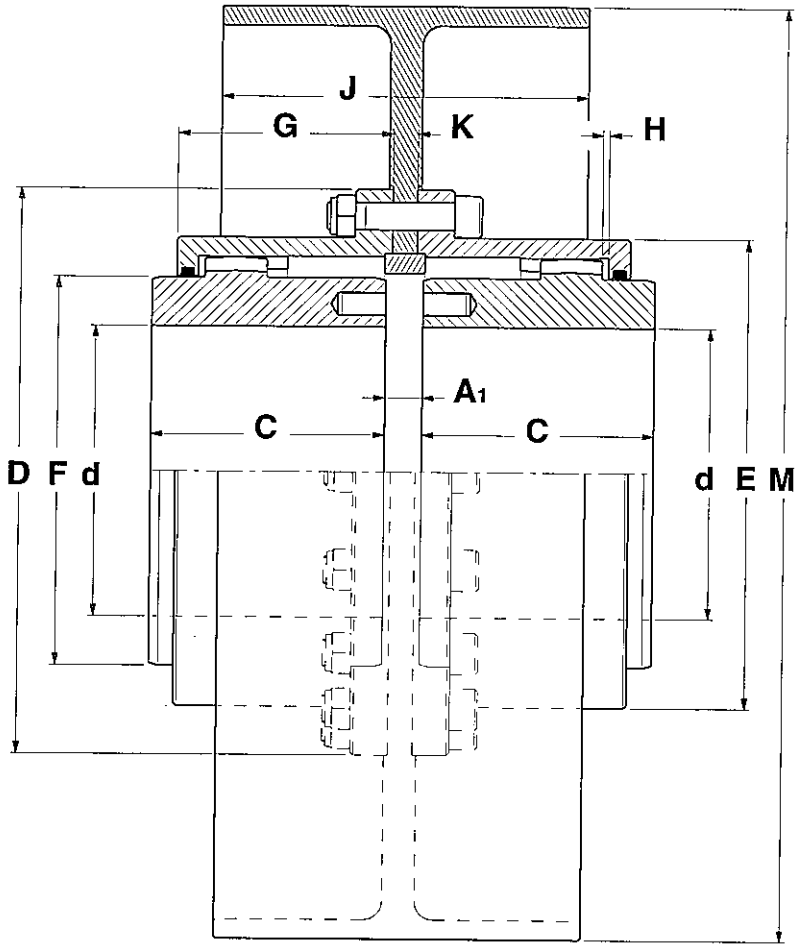

GO-A COUPLING SIZE	MAINA BRAKE PULLEY ASSEMBLIES
0	
1	
2	
3	
4	
5	
6	
7	
8	
9	
10	
11	

BRAKE PULLEY	200	250	315	400	500	630	710
	SIZE Dimensions [mm]						
M	200	250	315	400	500	630	710
J	75	95	118	150	190	236	265
K	8	10	12	14	18	22	22

Fig. 23 - GO-A.FF Coupling

DENOMINATION EXAMPLE:
GO-A.FF COUPLING SIZE 6 + SIZE 630 BRAKE PULLEY

GO-6A.FF.630 Coupling

TAB. 21

SIZE	NOMINAL TORQUE [kNm] Tk	MAX TORQUE [kNm] Tf	MAX SPEED [1/min] nk	MIN MAX [mm] d	DIMENSIONS [mm] D	C	A	A1	E	F	G	H	MASS ① M [Kg]	MOMENT OF INERTIA ① J [Kgm²]	GREASE QUANTITY [Kg]	TORSIONAL STIFFNESS ① Kx10⁶ [Nm/rad]
0	1.80	4.32	6000	12-52	111	43	3	3 + K	82.5	69	39	1.5	4.3	0.005	0.08	4.360
1	2.76	6.62	4620	18-62	142	50	3	3 + K	104.5	85	45.5	1.5	7.5	0.012	0.09	7.310
2	5.55	13.30	4140	28-78	168	62	3	3 + K	130.5	107	59	1.5	13.5	0.033	0.16	13.45
3	8.70	20.90	4000	40-98	200	76	5	5 + K	158.5	133	68.5	2.5	25	0.085	0.27	24.58
4	14.10	33.80	3860	50-112	225	90	5	5 + K	183.5	152	82.5	2.5	37	0.163	0.47	30.34
5	22.80	54.70	3720	60-132	265	105	6	6 + K	211.5	178	93	3	60	0.376	0.68	47.68
6	34.80	83.50	3190	70-156	300	120	6	6 + K	245.5	209	106	3	90	0.727	0.93	68.27
7	44.00	105.6	2900	85-174	330	135	8	8 + K	275	234	118	4	124	1.226	1.54	97.85
8	69.80	167.5	2570	95-190	370	150	8	8 + K	307	254	138	4	170	2.099	2.28	136.1
9	83.80	201.2	2330	110-210	406	175	8	8 + K	335	279	154	4	233	3.390	3.10	159.9
10	152.0	364.8	2150	120-233	438	190	8	8 + K	367	305	166	4	298	5.053	3.90	203.3
11	203.5	488.4	1800	130-280	505	220	10	10 + K	423	355	193	5	457	10.33	6.20	283.0

NOTE 1 - Values are calculated for solid hub and without brake wheel.

TECHNICAL DATA

GO-A.DT & GO-A.DF COUPLINGS

Fig. 24 - GO - A.DT Coupling

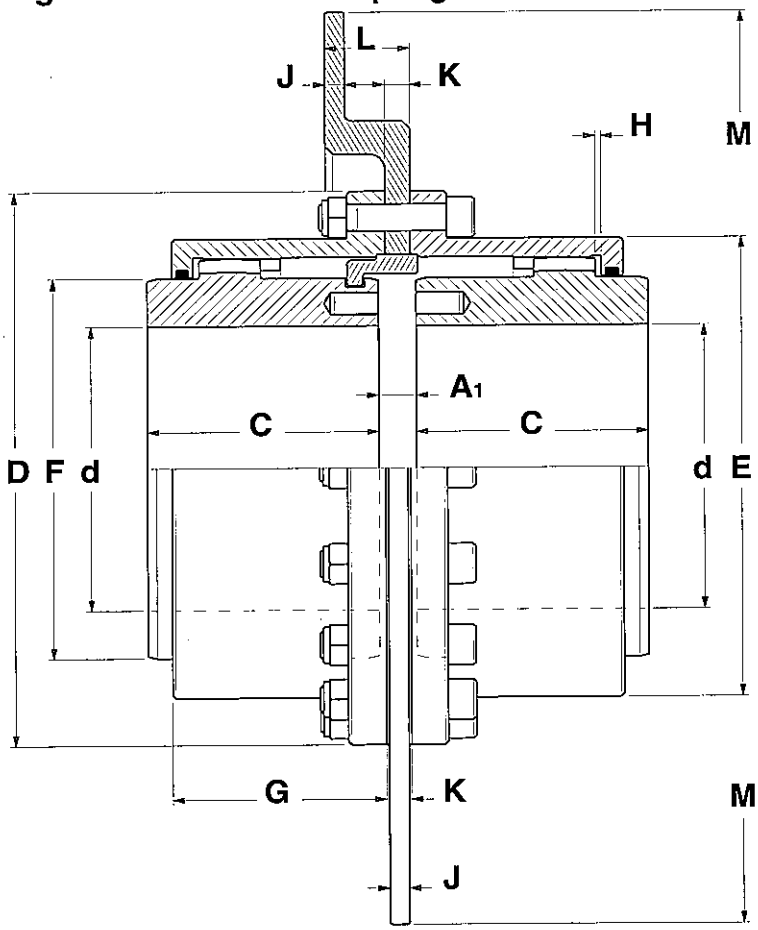

Fig. 25 - GO-A.DF Coupling

DENOMINATION EXAMPLE:
GO-A.DT COUPLING SIZE 6 + BRAKE DISC SIZE 610

GO-6A.DT.610 Coupling

GO-A COUPLING SIZE	TWIFLEX BRAKE DISC ASSEMBLIES
0	
1	
2	
3	
4	
5	
6	
7	
8	
9	
10	
11	

BRAKE DISC SIZE Dimensions [mm]	250	300	350	400	460	515	610	710	810	915
M	250	300	356	406	457	514	610	711	812	915
J	12.7									
K	6	13	16	13	16	16	16	19	25	25
L	36	41	54							

DENOMINATION EXAMPLE:
GO-A.DF COUPLING SIZE 6 + SIZE 610 BRAKE DISC

GO-6A.DF.610 Coupling

TAB. 22

SIZE	NOMINAL TORQUE [kNm] Tk	MAX TORQUE [kNm] Tf	MAX SPEED [1/min] nk	MIN MAX [mm] d	DIMENSIONS [mm] D	C	A	A1	E	F	G	H	MASS ① M [Kg]	MOMENT OF INERTIA ① J [Kgm²]	GREASE QUANTITY [Kg]	TORSIONAL STIFFNESS ① Kx10⁶ [Nm/rad]
0	1.80	4.32	6000	12-52	111	43	3	3 + K	82.5	69	39	1.5	4.3	0.005	0.08	4.360
1	2.76	6.62	4620	18-62	142	50	3	3 + K	104.5	85	45.5	1.5	7.5	0.012	0.09	7.310
2	5.55	13.30	4140	28-78	168	62	3	3 + K	130.5	107	59	1.5	13.5	0.033	0.16	13.45
3	8.70	20.90	4000	40-98	200	76	5	5 + K	158.5	133	68.5	2.5	25	0.085	0.27	24.58
4	14.10	33.80	3860	50-112	225	90	5	5 + K	183.5	152	82.5	2.5	37	0.163	0.47	30.34
5	22.80	54.70	3720	60-132	265	105	6	6 + K	211.5	178	93	3	60	0.376	0.68	47.68
6	34.80	83.50	3190	70-156	300	120	6	6 + K	245.5	209	106	3	90	0.727	0.93	68.27
7	44.00	105.6	2900	85-174	330	135	8	8 + K	275	234	118	4	124	1.226	1.54	97.85
8	69.80	167.5	2570	95-190	370	150	8	8 + K	307	254	138	4	170	2.099	2.28	136.1
9	83.80	201.2	2330	110-210	406	175	8	8 + K	335	279	154	4	233	3.390	3.10	159.9
10	152.0	364.8	2150	120-233	438	190	8	8 + K	367	305	166	4	298	5.053	3.90	203.3
11	203.5	488.4	1800	130-280	505	220	10	10 + K	423	355	193	5	457	10.33	6.20	283.0

NOTE 1 - Values are calculated for solid hub and without brake disc.

GO-A.DFV & GO-A.DFP COUPLINGS

Fig. 26 - GO-A.DFV Coupling

DENOMINATION EXAMPLE:
GO-A.DFV COUPLING SIZE 6 + SIZE 630V30 BRAKE DISC

GO-6A.DFV.630 V30 Coupling

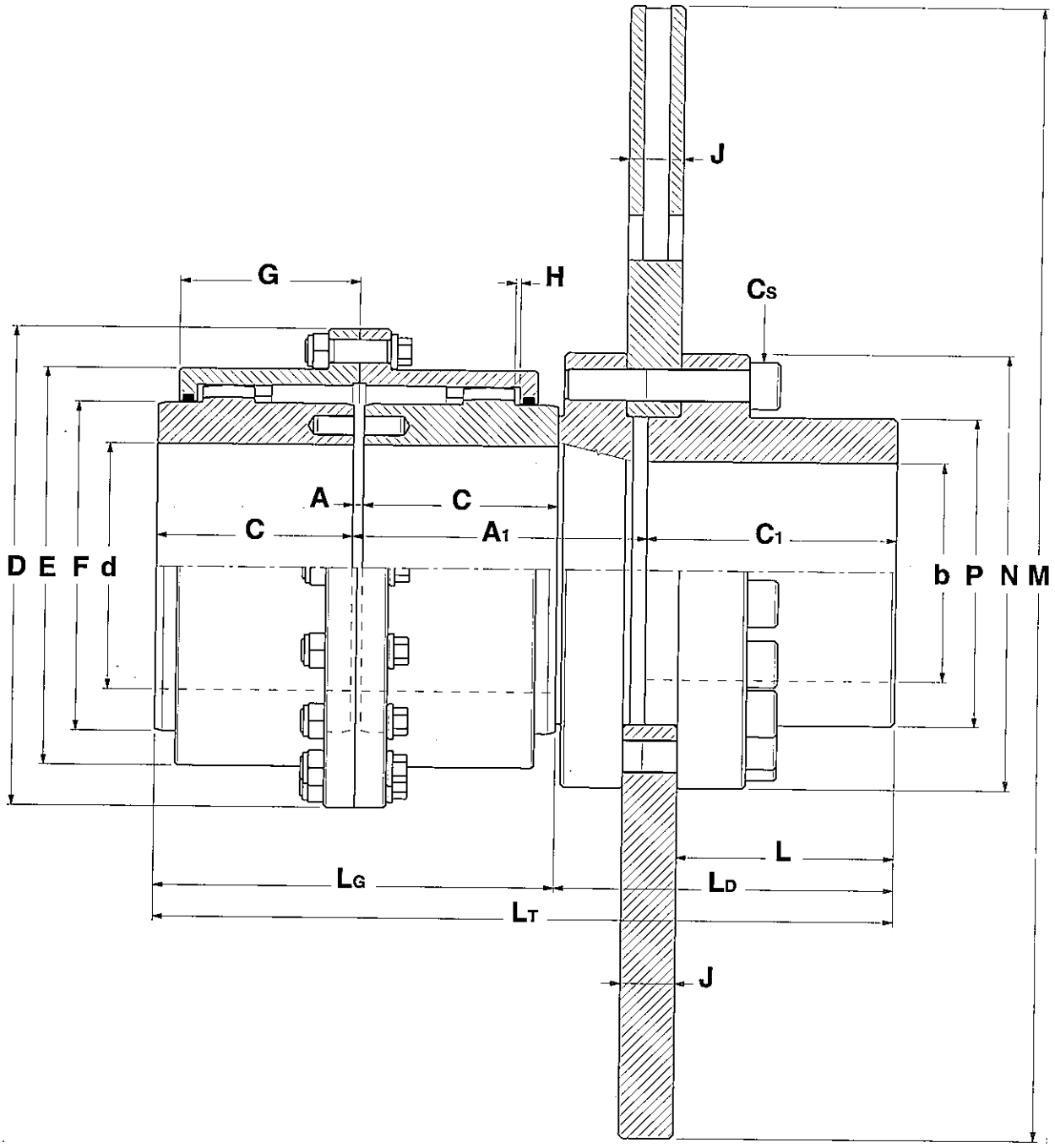

DENOMINATION EXAMPLE:
GO-A.DFP COUPLING SIZE 6 + SIZE 630P30 BRAKE DISC

GO-6A.DFP.630 P30 Coupling

Fig. 27 - GO-A.DFP Coupling

TECHNICAL DATA

GO-A.DFV & GO-A.DFP COUPLINGS

TAB. 23

GO-A COUPLINGS

SIZE	NOMINAL TORQUE [kNm] **Tk**	MAX TORQUE [kNm] **Tf**	MIN MAX [mm] **d**	DIMENSIONS [mm] **D**	**C**	**A**	**LG**	**E**	**F**	**G**	**H**	MASS ① M [Kg]	MOMENT OF INERTIA ① J [Kgm²]	GREASE QUANTITY [Kg]	TORSIONAL STIFFNESS ① Kx10⁶ [Nm/rad]
1	2.76	6.62	18-62	142	50	3	103	104.5	85	45.5	1.5	7.5	0.012	0.09	7.310
2	5.55	13.30	28-78	168	62	3	127	130.5	107	59	1.5	13.5	0.033	0.16	13.45
3	8.70	20.90	40-98	200	76	5	157	158.5	133	68.5	2.5	25	0.085	0.27	24.58
4	14.10	33.80	50-112	225	90	5	185	183.5	152	82.5	2.5	37	0.163	0.47	30.34
5	22.80	54.70	60-132	265	105	6	216	211.5	178	93	3	60	0.376	0.68	47.68
6	34.80	83.50	70-156	300	120	6	246	245.5	209	106	3	90	0.727	0.93	68.27
7	44.00	105.6	85-174	330	135	8	278	275	234	118	4	124	1.226	1.54	97.85
8	69.80	167.5	95-190	370	150	8	308	307	254	138	4	170	2.099	2.28	136.1

NOTE 1 - Values are calculated for solid hub and without brake disc.

DENOMINATION EXAMPLE:
GO-A GEAR COUPLING SIZE 6

GO-6A Coupling

TAB. 24

DFV & DFP BRAKE DISC

SIZE	TIGHTENING TORQUE [Nm] **Cs**	MAX SPEED [1/min] **nK**	MAX [mm] **b**	DIMENSIONS [mm] **M**	**J**	**C1**	**L**	**P**	**N**	**LD**
315-30	49	3000	60	315	30	107	87	88	130	145
355-30	86	2700	72	355	30	107	87	106	150	145
400-30	135	2400	80	395	30	107	87	118	170	145
450-30	210	2100	80	445	30	140	120	118	180	190
500-30	290	1900	110	495	30	140	120	160	225	190
550-30	290	1800	110	550	30	140	120	160	225	190
630-30	410	1500	120	625	30	140	120	170	240	190
710-30	550	1300	130	705	30	140	120	190	270	195
800-30	710	1200	150	795	30	140	120	220	310	195
630-42	710	1500	150	625	42	140	120	220	310	210
800-42	1450	1300	190	795	42	180	160	280	390	250
1000-42	1450	1200	190	995	42	180	160	280	390	250

BRAKE DISC ASSEMBLIES																	
1A		2A		3A		4A		5A		6A		7A		8A			
LT	**A1**	**LT**	**A1**	**LT**	**A1**	**LT**	**A1**	**LT**	**A1**	**LT**	**A1**	**LT**	**A1**	**LT**	**A1**		
248	91	272	103														
248	91	272	103														
248	91	272	103	302	119												
293	103	317	115	347	131	375	145										
		317	115	347	131	375	145	406	161								
		317	115	347	131	375	145	406	161								
				347	131	375	145	406	161	436	176						
						380	150	411	166	441	181	473	198				
						380	150	411	166	441	181	473	198				
								426	181	456	196	488	213	518	228		
										496	196	528	213	558	228		
										496	196	528	213	558	228		
X = 65		X = 68		X = 74		X = 80		X = 80		X = 95		X = 110		X = 145			

DENOMINATION EXAMPLE:
SIZE 630 VENTILATED BRAKE DISC THICKNESS 30

630V30 Brake Disc

DENOMINATION EXAMPLE:
SIZE 630 SOLID BRAKE DISC THICKNESS 30

630P30 Brake Disc

If assembled with GO-AMM coupling dimensions **LT** & **A1** will be:

LT = LT + 2X
A1 = A1 + X

GO-AH.MN, GO-AH.PM & GO-AH.CL COUPLINGS

TECHNICAL DATA

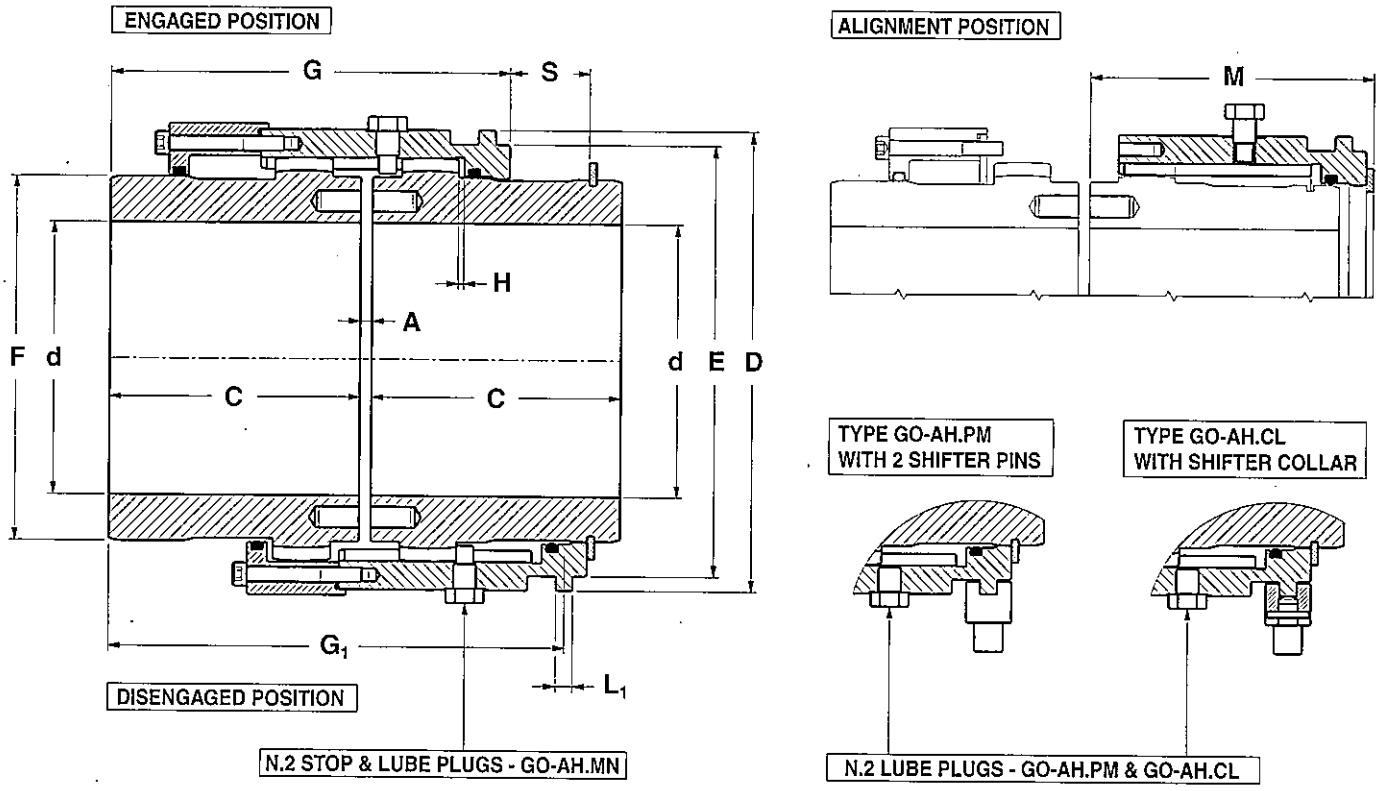

Fig. 28 - GO-AH.MN Coupling

DENOMINATION EXAMPLE:
GO-AH.MN GEAR COUPLING SIZE 6

GO-6AH.MN Coupling

TAB. 25

SIZE	NOMINAL TORQUE [kNm] Tk	MAX TORQUE [kNm] Tf	MAX SPEED [1/min] nk	MIN MAX [mm] d	DIMENSIONS [mm] D	C	A	E	F	G	G1	L1	H	S	M	GREASE QUANTITY [Kg]
0	1.80	4.32	3000	12-52	100	60	3	90	69	98	112	6	1.5	17	70	0.08
1	2.76	6.62	2500	18-62	120	70	3	110	85	111	124	6	1.5	22	80	0.09
2	5.55	13.30	2000	28-78	152	85	3	138	107	135.5	152.5	8	1.5	29	95	0.16
3	8.70	20.90	1800	40-98	175	95	5	161	133	155.5	176	8	2.5	32	110	0.27
4	14.10	33.80	1500	50-112	200	105	5	186	152	170.5	192.5	8	2.5	34	120	0.47
5	22.80	54.70	1350	60-132	230	120	6	215	178	195	220	12	3	39	135	0.68
6	34.80	83.50	1200	70-156	260	130	6	248	209	206	235	12	3	45	145	0.93
7	44.00	105.6	1100	85-174	290	150	8	273	234	238	272	12	4	50	160	1.54
8	69.80	167.5	950	95-190	320	175	8	300	254	279	319	12	4	56	200	2.28
9	83.80	201.2	900	110-210	350	190	8	329	279	303	348	12	4	62	220	3.10
10	152.0	364.8	800	120-233	395	220	8	374	305	356	407	12	4	70	265	3.90
11	203.5	488.4	700	130-280	450	250	10	420	355	404	461	16	5	77	295	6.20

NOTE - The max speed values (nk) are appliable to GO-AH.MN & GO-AH.CL couplings and must be reduced of 20% for GO-AH.PM type.

TECHNICAL DATA

GO-AH.RO COUPLINGS

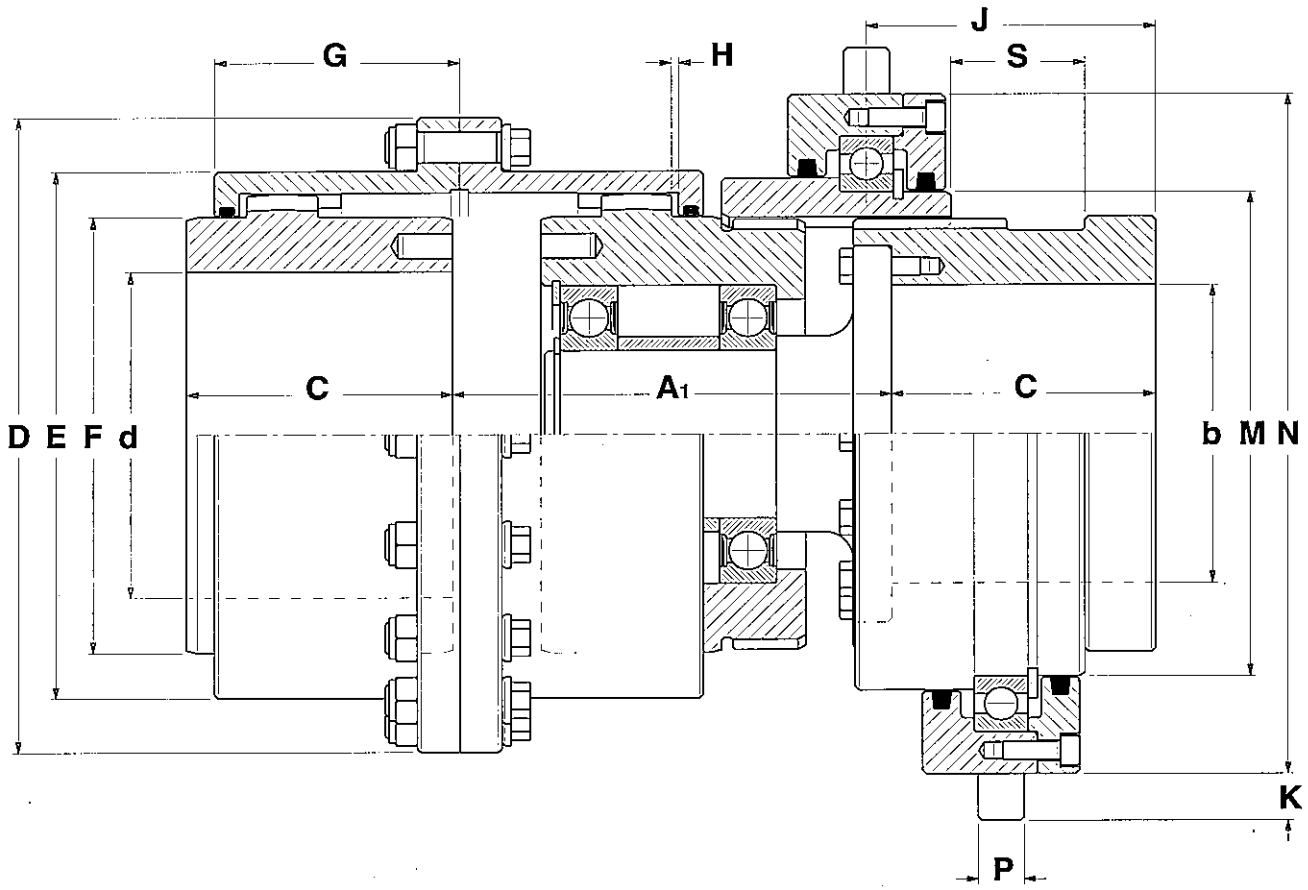

DENOMINATION EXAMPLE:
GO-AH.RO GEAR COUPLING SIZE 6

GO-6AH.RO Coupling

Fig. 29 - GO-AH.RO Coupling

TAB. 26

SIZE	NOMINAL TORQUE [kNm] Tk	MAX TORQUE [kNm] Tf	MAX SPEED [1/min] nk	MIN MAX [mm] d	MAX [mm] b	DIMENSIONS [mm] D	C	A1	E	F	G	H	M	N	J	K	P	S	GREASE QUANTITY [Kg]
0	1.80	4.32	6000	12-52	38	111	43	80	82.5	69	39	1.5	80	120	56	12	12	28	0.08
1	2.76	6.62	4620	18-62	50	142	50	95	104.5	85	45.5	1.5	100	150	66	12	12	35	0.09
2	5.55	13.30	4140	28-78	68	168	62	115	130.5	107	59	1.5	120	175	78	16	16	40	0.16
3	8.70	20.90	4000	40-98	86	200	76	130	158.5	133	68.5	2.5	150	220	89	16	16	45	0.27
4	14.10	33.80	3860	50-112	94	225	90	155	183.5	152	82.5	2.5	170	260	107	16	16	50	0.47
5	22.80	54.70	3720	60-132	120	265	105	165	211.5	178	93	3	200	300	122	20	20	50	0.68
6	34.80	83.50	3190	70-156	135	300	120	190	245.5	209	106	3	240	350	135	20	20	60	0.93
7	44.00	105.6	2900	85-174	160	330	135	220	275	234	118	4	260	370	151	20	20	70	1.54
8	69.80	167.5	2570	95-190	170	370	150	250	307	254	138	4	280	400	158	20	20	80	2.28
9	83.80	201.2	2330	110-210	185	406	175	275	355	279	154	4	320	450	175	24	24	90	3.10
10	152.0	364.8	2150	120-233	200	438	190	300	367	305	166	4	340	470	181	24	24	100	3.90
11	203.5	488.4	1800	130-280	250	505	220	350	423	355	193	5	400	550	193	27	27	115	6.20

GO-AS, AO-AS & AO-FAS COUPLINGS

TECHNICAL DATA

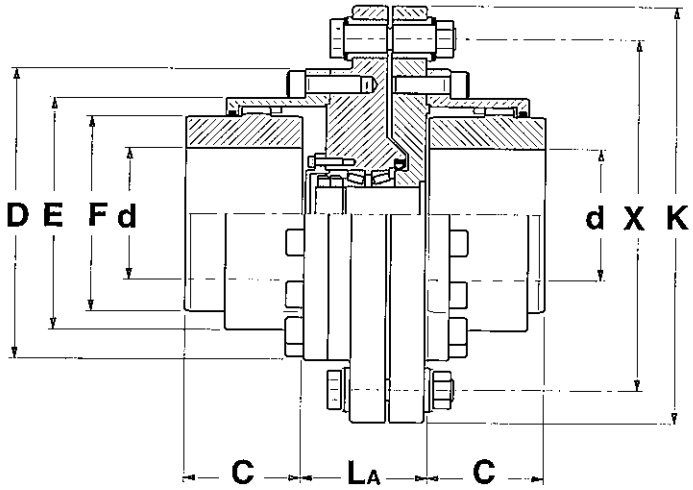

Fig. 30 - GO-AS Coupling

TAB. 27

SIZE	NOMINAL TORQUE [kNm] Tk	MAX TORQUE [kNm] Tf	MAX SPEED [1/min] nk	MIN MAX [mm] d	MAX [mm] b	DIMENSIONS [mm] D	C	E	F
0	1.80	4.32	6000	12-52	60	111	43	82.5	69
1	2.76	6.62	4620	18-62	75	142	50	104.5	85
2	5.55	13.30	4140	28-78	90	168	62	130.5	107
3	8.70	20.90	4000	40-98	110	200	76	158.5	133
4	14.10	33.80	3860	50-112	130	225	90	183.5	152
5	22.80	54.70	3720	60-132	150	265	105	211.5	178
6	34.80	83.50	3190	70-156	175	300	120	245.5	209
7	44.00	105.6	2900	85-174	195	330	135	275	234
8	69.80	167.5	2570	95-190	220	370	150	307	254
9	83.80	201.2	2330	110-210	240	406	175	335	279
10	152.0	364.8	2150	120-233	260	438	190	367	305
11	203.5	488.4	1800	130-280	300	505	220	423	355

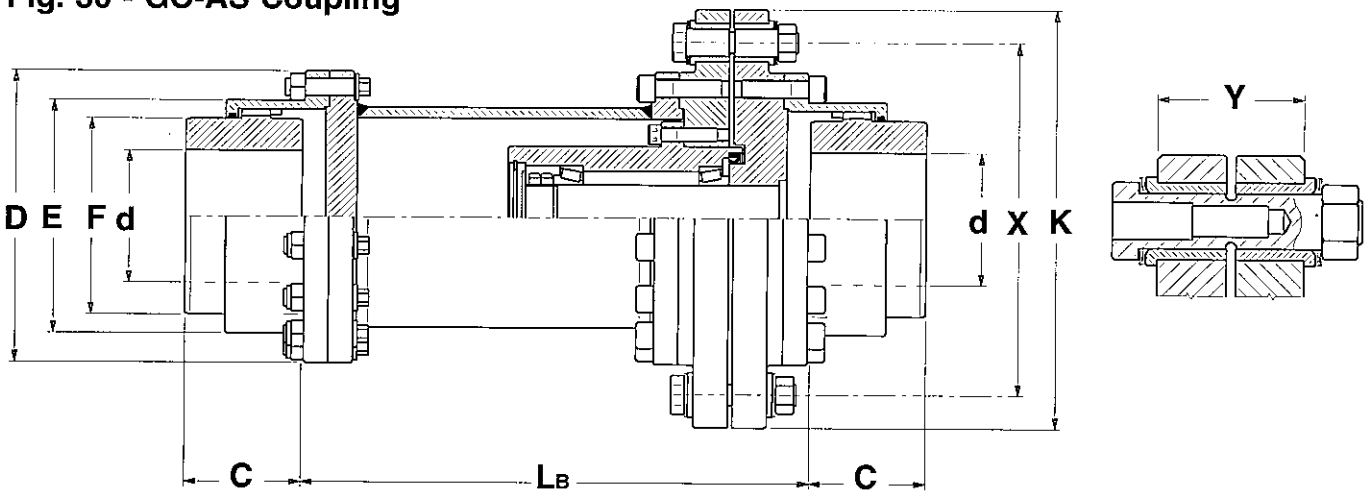

Fig. 31 - AO-AS Spacer Couplings

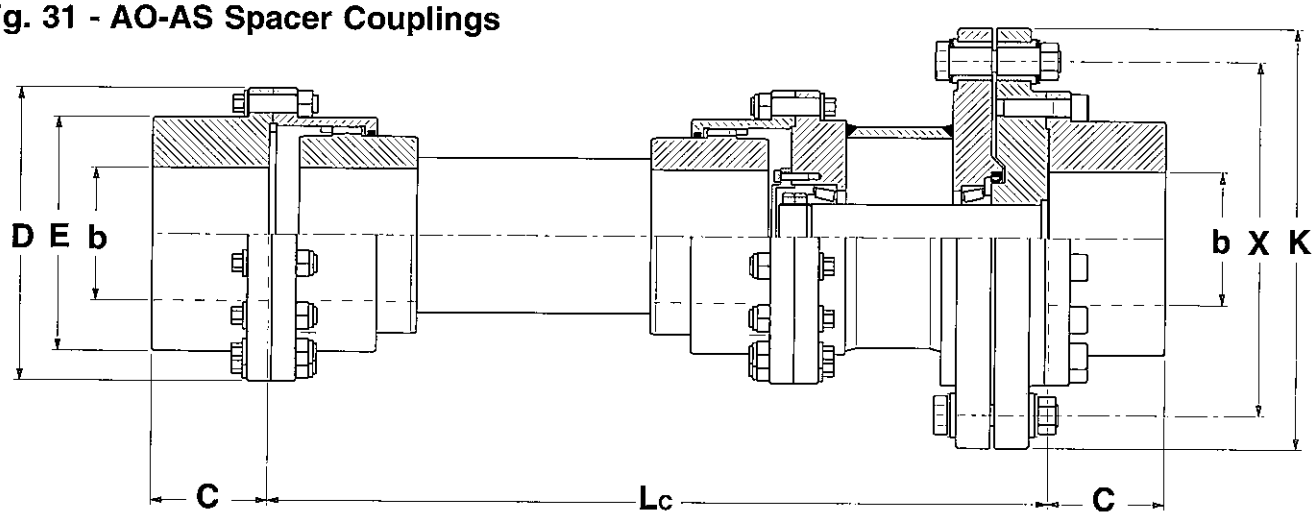

Fig. 32 - AO-FAS Floating Shaft Couplings

TECHNICAL DATA

GO-AS, AO-AS & AO-FAS COUPLINGS

TAB. 28

SIZE	DIMENSIONS [mm] min LA	min LB	min LC	K	X	Y	SHEAR PIN DEVICE TYPE	SHEAR PIN TYPE L TYPE	SETTING [kNm] MIN	MAX	SHEAR PIN TYPE H TYPE	SETTING [kNm] MIN	MAX
0	85	160	300	150	130	28	08.2.13	08L	0.20	0.37	08H	0.33	0.63
				165	140	34	10.2.14	10L	0.31	0.63	10H	0.52	1.04
				170	140		12.2.14	12L	0.48	0.85	12H	0.80	1.42
1	85	170	300	195	170	34	10.2.17	10L	0.38	0.76	10H	0.64	1.27
				200	170		12.2.17	12L	0.58	1.04	12H	0.97	1.72
				215	180	50	14.2.18	14L	0.82	1.60	14H	1.37	2.66
2	100	200	400	230	200	34	12.2.20	12L	0.69	1.22	12H	1.15	2.03
				235	200	50	14.2.20	14L	0.91	1.78	14H	1.52	2.96
				250	210		17.2.21	17L	1.51	2.72	17H	2.51	4.52
3	100	200	400	265	230	50	14.2.23	14L	1.05	2.05	14H	1.75	3.40
				270	230		17.2.23	17L	1.66	2.98	17H	2.75	4.95
				300	250	66	22.2.25	22L	2.86	5.46	22H	4.75	9.07
4	110	240	500	310	270	50	17.2.27	17L	1.95	3.50	17H	3.23	5.82
				320	270	66	22.2.27	22L	3.09	5.90	22H	5.13	9.80
				340	280		25.2.28	25L	4.22	7.84	25H	6.41	11.90
5	110	280	500	360	310	66	22.2.31	22L	3.54	6.77	22H	5.89	11.25
				380	320		25.2.32	25L	4.83	8.96	25H	7.33	13.60
				390	320		30.2.32	30L	6.73	12.76	30H	10.21	19.36
6	140	290	600	400	350	66	22.2.35	22L	4.00	7.64	22H	6.65	12.70
				410	350		25.2.35	25L	5.28	9.80	25H	8.02	14.87
				430	360		30.2.36	30L	7.57	14.36	30H	11.49	21.78
				450	370	84	35.2.37	35L	10.76	20.33	35H	16.33	30.85
7	150	310	650	440	380	66	25.2.38	25L	5.73	10.64	25H	8.70	16.15
				460	390		30.2.39	30L	8.20	15.55	30H	12.45	23.60
				480	400	84	35.2.40	35L	11.64	21.98	35H	17.66	33.35
				500	410		40.2.41	40L	15.66	29.07	40H	23.76	44.11
8	150	330	700	480	420	66	25.2.42	25L	6.34	11.76	25H	9.62	17.85
				500	430		30.2.43	30L	9.04	17.15	30H	13.72	26.02
				530	450	84	35.2.45	35L	13.09	24.73	35H	19.86	37.52
				540	450		40.2.45	40L	17.18	31.91	40H	26.07	48.41
				560	460	105	45.2.46	45L	21.78	41.54	45H	33.04	63.03
9	170	380	800	520	460	66	25.2.46	25L	6.94	12.88	25H	10.54	19.55
				530	460		30.2.46	30L	9.68	18.34	30H	14.68	27.84
				560	480	84	35.2.48	35L	13.96	26.38	35H	21.19	40.03
				570	480		40.2.48	40L	18.33	34.03	40H	27.81	51.64
				600	500	105	45.2.50	45L	23.67	45.16	45H	35.92	68.52
				610	500		50.2.50	50L	28.73	56.03	50H	43.60	85.01
10	170	390	900	580	510	66	30.2.51	30L	10.73	20.34	30H	16.28	30.86
				590	510	84	35.2.51	35L	14.84	28.03	35H	22.51	42.53
				610	520		40.2.52	40L	19.86	36.87	40H	30.13	55.95
				620	520	105	45.2.52	45L	24.62	46.96	45H	37.35	71.26
				640	530		50.2.53	50L	30.46	59.39	50H	46.21	90.12
				640	530		55.2.53	55L	37.29	71.61	55H	56.58	108.66
11	170	420	1000	660	580	84	35.2.58	35L	16.87	31.88	35H	25.60	48.37
				680	590		40.2.59	40L	22.53	41.84	40H	34.19	63.48
				690	590	105	45.2.59	45L	27.93	53.29	45H	42.38	80.85
				710	600		50.2.60	50L	34.48	67.24	50H	52.32	102.02
				710	600		55.2.60	55L	42.22	81.07	55H	64.05	123.01
				730	610	137	60.2.61	60L	51.46	98.49	60H	78.08	149.44

NOTE 1 - Setting torques shown in the table are for 2 shear pins; for 3 shear pins multiply the values by 1.5.

DENOMINATION EXAMPLE:
GO-AS COUPLING SIZE 6 + DEVICE 30H.2.36
GO-6AS.30H.2.36 Coupling

GO-ASX & AO-ASX COUPLINGS

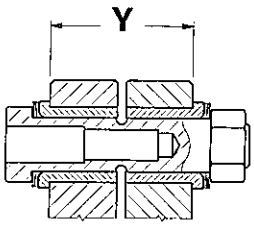

TAB. 29

SIZE	NOMINAL TORQUE [kNm] Tk	MAX TORQUE [kNm] Tf	MAX SPEED [1/min] nk	MIN MAX [mm] d	MAX [mm] b	DIMENSIONS [mm] D	C	E	F
0	1.80	4.32	6000	12-52	60	111	43	82.5	69
1	2.76	6.62	4620	18-62	75	142	50	104.5	85
2	5.55	13.30	4140	28-78	90	168	62	130.5	107
3	8.70	20.90	4000	40-98	110	200	76	158.5	133
4	14.10	33.80	3860	50-112	130	225	90	183.5	152
5	22.80	54.70	3720	60-132	150	265	105	211.5	178
6	34.80	83.50	3190	70-156	175	300	120	245.5	209
7	44.00	105.6	2900	85-174	195	330	135	275	234
8	69.80	167.5	2570	95-190	220	370	150	307	254
9	83.80	201.2	2330	110-210	240	406	175	335	279
10	152.0	364.8	2150	120-233	260	438	190	367	305
11	203.5	488.4	1800	130-280	300	505	220	423	355

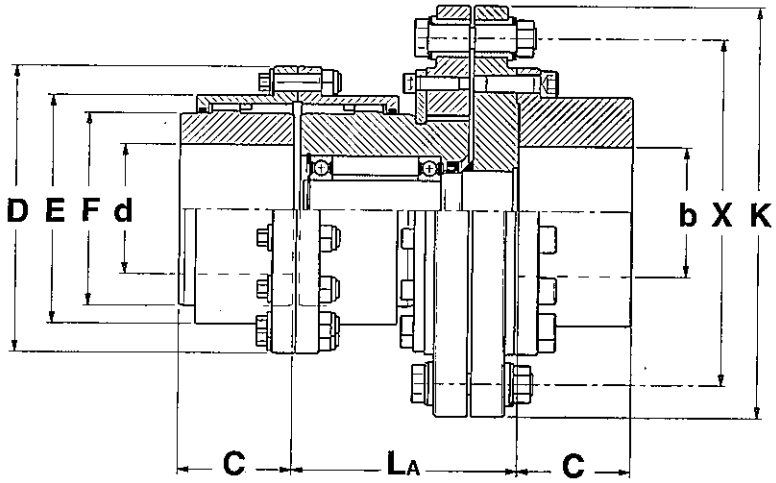

Fig. 33 - GO-ASX Coupling

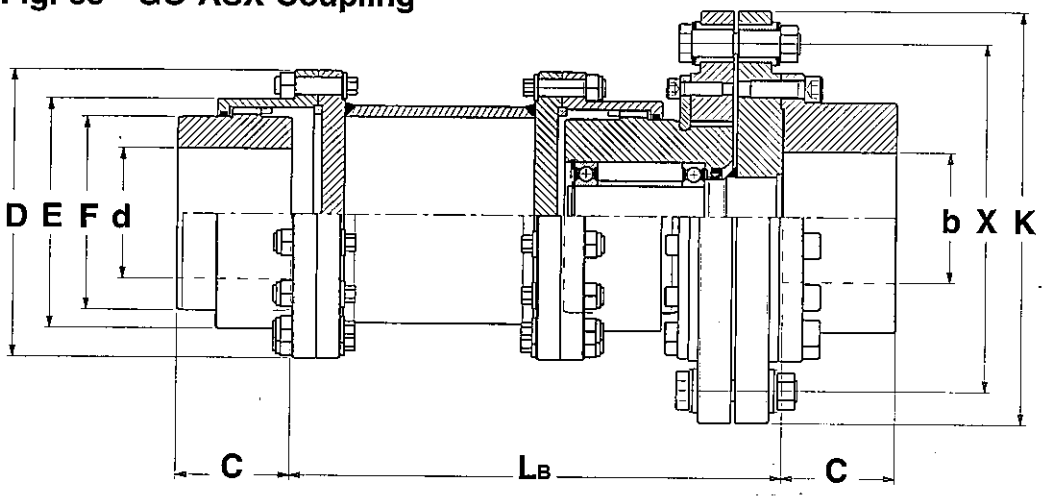

Fig. 34 - AO-ASX Spacer Coupling

TECHNICAL DATA

GO-ASX & AO-ASX COUPLINGS

TAB. 30

SIZE	DIMENSIONS [mm] min LA	min LB	K	X	Y	SHEAR PIN DEVICE TYPE	SHEAR PIN TYPE L TYPE	SETTING [kNm] MIN	MAX	SHEAR PIN TYPE H TYPE	SETTING [kNm] MIN	MAX
0	85	170	150	130	28	08.2.13	08L	0.20	0.37	08H	0.33	0.63
			165	140	34	10.2.14	10L	0.31	0.63	10H	0.52	1.04
			170	140		12.2.14	12L	0.48	0.85	12H	0.80	1.42
1	110	210	195	170	34	10.2.17	10L	0.38	0.76	10H	0.64	1.27
			200	170		12.2.17	12L	0.58	1.04	12H	0.97	1.72
			215	180	50	14.2.18	14L	0.82	1.60	14H	1.37	2.66
2	125	230	230	200	34	12.2.20	12L	0.69	1.22	12H	1.15	2.03
			235	200	50	14.2.20	14L	0.91	1.78	14H	1.52	2.96
			250	210		17.2.21	17L	1.51	2.72	17H	2.51	4.52
3	155	270	265	230	50	14.2.23	14L	1.05	2.05	14H	1.75	3.40
			270	230		17.2.23	17L	1.66	2.98	17H	2.75	4.95
			300	250	66	22.2.25	22L	2.86	5.46	22H	4.75	9.07
4	170	300	310	270	50	17.2.27	17L	1.95	3.50	17H	3.23	5.82
			320	270	66	22.2.27	22L	3.09	5.90	22H	5.13	9.80
			340	280		25.2.28	25L	4.22	7.84	25H	6.41	11.90
5	200	340	360	310	66	22.2.31	22L	3.54	6.77	22H	5.89	11.25
			380	320		25.2.32	25L	4.83	8.96	25H	7.33	13.60
			390	320		30.2.32	30L	6.73	12.76	30H	10.21	19.36
6	215	360	400	350	66	22.2.35	22L	4.00	7.64	22H	6.65	12.70
			410	350		25.2.35	25L	5.28	9.80	25H	8.02	14.87
			430	360		30.2.36	30L	7.57	14.36	30H	11.49	21.78
			450	370	84	35.2.37	35L	10.76	20.33	35H	16.33	30.85
7	235	400	440	380	66	25.2.38	25L	5.73	10.64	25H	8.70	16.15
			460	390		30.2.39	30L	8.20	15.55	30H	12.45	23.60
			480	400	84	35.2.40	35L	11.64	21.98	35H	17.66	33.35
			500	410		40.2.41	40L	15.66	29.07	40H	23.76	44.11
8	275	480	480	420	66	25.2.42	25L	6.34	11.76	25H	9.62	17.85
			500	430		30.2.43	30L	9.04	17.15	30H	13.72	26.02
			530	450	84	35.2.45	35L	13.09	24.73	35H	19.86	37.52
			540	450		40.2.45	40L	17.18	31.91	40H	26.07	48.41
			560	460	105	45.2.46	45L	21.78	41.54	45H	33.04	63.03
9	290	500	520	460	66	25.2.46	25L	6.94	12.88	25H	10.54	19.55
			530	460		30.2.46	30L	9.68	18.34	30H	14.68	27.84
			560	480	84	35.2.48	35L	13.96	26.38	35H	21.19	40.03
			570	480		40.2.48	40L	18.33	34.03	40H	27.81	51.64
			600	500	105	45.2.50	45L	23.67	45.16	45H	35.92	68.52
			610	500		50.2.50	50L	28.73	56.03	50H	43.60	85.01
10	310	540	580	510	66	30.2.51	30L	10.73	20.34	30H	16.28	30.86
			590	510	84	35.2.51	35L	14.84	28.03	35H	22.51	42.53
			610	520		40.2.52	40L	19.86	36.87	40H	30.13	55.95
			620	520	105	45.2.52	45L	24.62	46.96	45H	37.35	71.26
			640	530		50.2.53	50L	30.46	59.39	50H	46.21	90.12
			640	530		55.2.53	55L	37.29	71.61	55H	56.58	108.66
11	370	620	660	580	84	35.2.58	35L	16.87	31.88	35H	25.60	48.37
			680	590		40.2.59	40L	22.53	41.84	40H	34.19	63.48
			690	590	105	45.2.59	45L	27.93	53.29	45H	42.38	80.85
			710	600		50.2.60	50L	34.48	67.24	50H	52.32	102.02
			710	600		55.2.60	55L	42.22	81.07	55H	64.05	123.01
			730	610	137	60.2.61	60L	51.46	98.49	60H	78.08	149.44

NOTE 1 - Setting torques shown in the table are for 2 shear pins;
for 3 shear pins multiply the values by 1.5.

DENOMINATION EXAMPLE:
GO-ASX COUPLING SIZE 6 + DEVICE 30H.2.36
GO-6ASX.30H.2.36 Coupling

GO-APR COUPLINGS

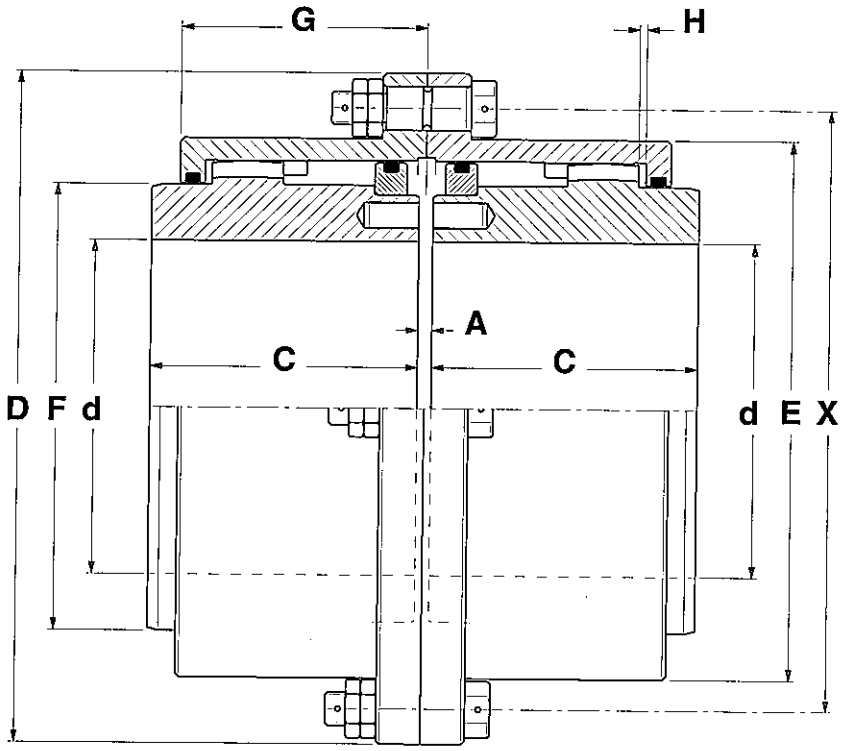

Fig. 35 - GO-APR Coupling

DENOMINATION EXAMPLE:
GO-APR COUPLING SIZE 6 WITH 22H.3 SHEAR PIN

GO-6APR.22H.3 Coupling

TAB. 31

SIZE	NOMINAL TORQUE [kNm] Tk	MAX TORQUE [kNm] Tf	MAX SPEED [1/min] nk	MIN MAX [mm] d	DIMENSIONS [mm] D	C	A	E	F	X	G	H
0	1.80	4.32	6000	12-52	111	43	3	82.5	69	94	39	1.5
1	2.76	6.62	4620	18-62	142	50	3	104.5	85	120	45.5	1.5
2	5.55	13.30	4140	28-78	168	62	3	130.5	107	150	59	1.5
3	8.70	20.90	4000	40-98	200	76	5	158.5	133	180	68.5	2.5
4	14.10	33.80	3860	50-112	225	90	5	183.5	152	205	82.5	2.5
5	22.80	54.70	3720	60-132	265	105	6	211.5	178	240	93	3
6	34.80	83.50	3190	70-156	300	120	6	245.5	209	276	106	3
7	44.00	105.6	2900	85-174	330	135	8	275	234	303	118	4
8	69.80	167.5	2570	95-190	370	150	8	307	254	342	138	4
9	83.80	201.2	2330	110-210	406	175	8	335	279	370	154	4
10	152.0	364.8	2150	120-233	438	190	8	367	305	402	166	4
11	203.5	488.4	1800	130-280	505	220	10	423	355	462	193	5

TAB. 32

TYPE COUPLING	SHEAR PIN TYPE L			SHEAR PIN TYPE H		
	TYPE	SETTING [kNm] MIN	MAX	TYPE	SETTING [kNm] MIN	MAX
0	08L.2	0.14	0.74	08H.2	0.24	1.23
	08L.3	0.22	1.11	08H.3	0.36	1.85
	08L.4	0.29	1.49	08H.4	0.48	2.47
1	10L.2	0.27	1.46	10H.2	0.45	2.42
	10L.3	0.41	2.19	10H.3	0.68	3.63
	10L.4	0.54	2.92	10H.4	0.90	4.85
2	12L.2	0.52	2.59	12H.2	0.86	4.30
	12L.3	0.78	3.88	12H.3	1.29	6.45
	12L.4	1.04	5.18	12H.4	1.72	8.60
3	17L.2	1.30	6.46	17H.2	2.15	10.73
	17L.3	1.95	9.69	17H.3	3.23	16.09
	17L.4	2.60	12.92	17H.4	4.31	21.46
4	17L.2	1.48	7.35	17H.2	2.45	12.22
	17L.3	2.22	11.03	17H.3	3.23	18.33
	17L.4	2.96	14.71	17H.4	4.91	24.44
5	22L.2	2.74	14.19	22H.2	4.56	23.57
	22L.3	4.12	21.29	22H.3	6.84	35.36
	22L.4	5.49	28.39	22H.4	9.12	47.15
6	22L.2	3.16	16.32	22H.2	5.24	27.11
	22L.3	4.74	24.48	22H.3	7.87	40.67
	22L.4	6.32	32.65	22H.4	10.49	54.23
7	22L.2	3.46	17.92	22H.2	5.76	29.76
	22L.3	5.20	26.88	22H.3	8.64	44.65
	22L.4	6.93	35.84	22H.4	11.52	59.53
8	25L.2	5.16	25.56	25H.2	7.83	38.79
	25L.3	7.74	38.35	25H.3	11.75	58.19
	25L.4	10.33	51.13	25H.4	15.67	77.58
9	25L.2	5.58	27.66	25H.2	8.47	41.96
	25L.3	8.38	41.49	25H.3	12.71	62.95
	25L.4	11.17	55.32	25H.4	16.95	83.93
10	25L.2	6.07	30.05	25H.2	9.21	45.59
	25L.3	9.10	45.08	25H.3	13.81	68.39
	25L.4	12.14	60.10	25H.4	18.42	91.19
11	28L.2	8.47	44.72	28H.2	12.63	66.70
	28L.3	12.71	67.08	28H.3	18.95	100.06
	28L.4	16.94	89.44	28H.4	25.27	133.41

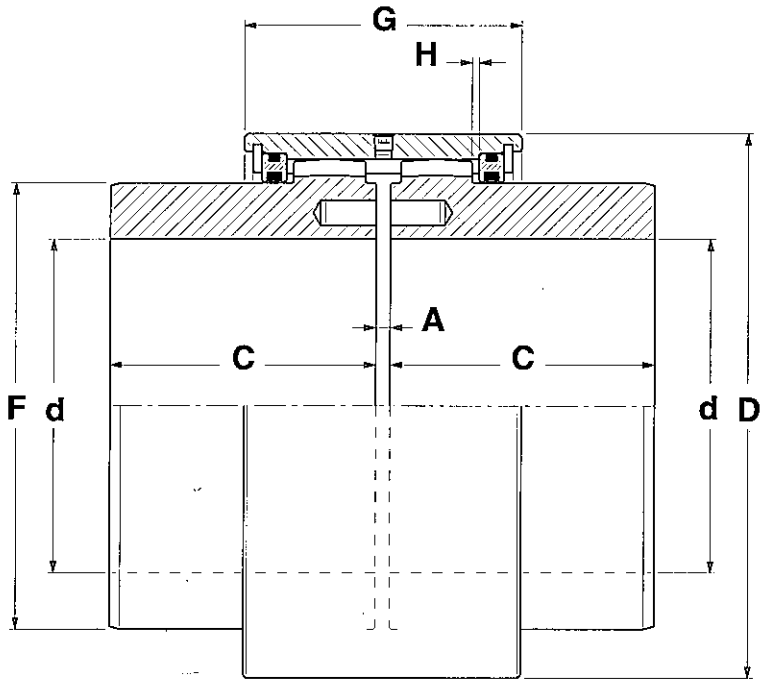

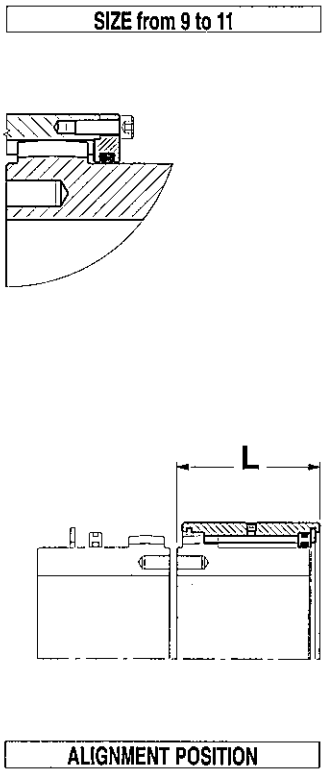

DENOMINATION EXAMPLE:
GO-MA GEAR COUPLING SIZE 6

GO-6MA Coupling

Fig. 36 - GO-MA Coupling

TAB. 33

SIZE	NOMINAL TORQUE [kNm] Tk	MAX TORQUE [kNm] Tf	MAX SPEED [1/min] nk	MIN MAX [mm] d	DIMENSIONS [mm] D	C	A	F	G	H	L	MASS ① M [Kg]	MOMENT OF INERTIA ① J [Kgm²]	GREASE QUANTITY [Kg]	TORSIONAL STIFFNESS ① Kx10⁶ [Nm/rad]
0	1.80	4.32	6000	12-52	96	43	3	69	63	1.5	67	4	0.004	0.08	21.63
1	2.76	6.62	4620	18-62	115	50	3	85	74	1.5	78	7	0.010	0.09	32.63
2	5.55	13.30	4140	28-78	140	62	3	107	89	1.5	94	13	0.028	0.16	56.58
3	8.70	20.90	4000	40-98	175	76	5	133	102	2.5	107	24	0.080	0.27	121.9
4	14.10	33.80	3860	50-112	195	90	5	152	108	2.5	114	34	0.140	0.47	148.8
5	22.80	54.70	3720	60-132	225	105	6	178	118	3	124	53	0.292	0.68	238.3
6	34.80	83.50	3190	70-156	255	120	6	209	130	3	136	80	0.553	0.93	303.8
7	44.00	105.6	2900	85-174	290	135	8	234	138	4	144	113	1.037	1.54	523.6
8	69.80	167.5	2570	95-190	310	150	8	254	156	4	162	146	1.521	2.28	532.5
9	83.80	201.2	2330	110-210	340	175	8	279	152	4	151	SIZES from 9 to 11 are provided on demand			
10	152.0	364.8	2150	120-233	370	190	8	305	160	4	159				
11	203.5	488.4	1800	130-280	425	220	10	355	180	5	179				

NOTE 1 - Values are calculated for solid hubs.

AGMA-N, AGMA-R & AGMA-RR COUPLINGS

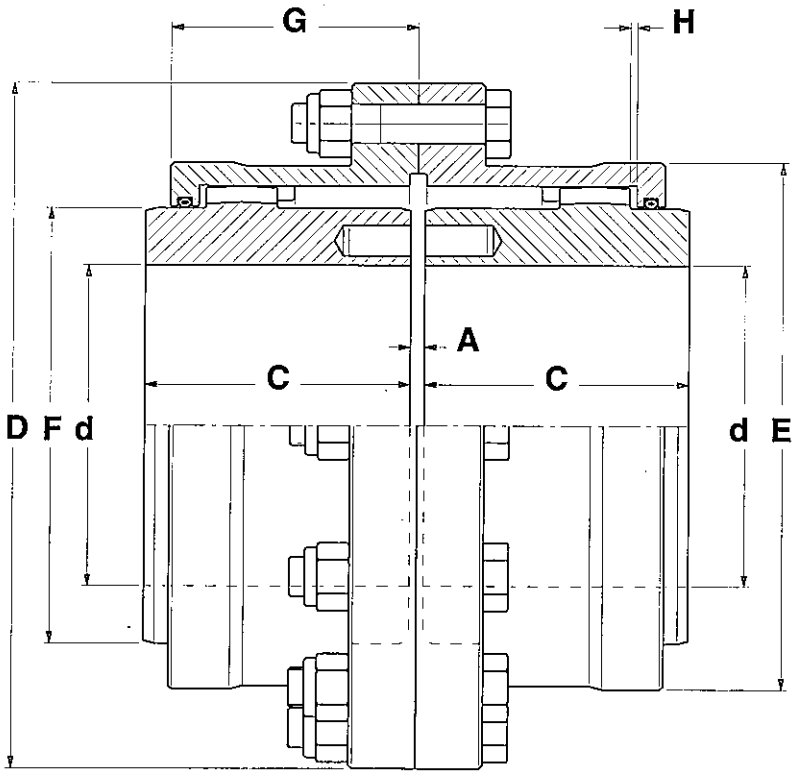

Fig. 37 - AGMA-N Coupling

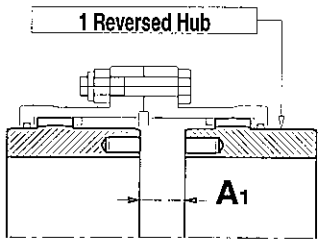

Fig. 38 - AGMA-R Coupling

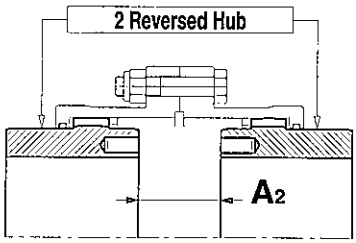

Fig. 39 - AGMA-RR Coupling

DENOMINATION EXAMPLE:
AGMA GEAR COUPLING SIZE 4.5

AGMA-4.5N Coupling

TAB. 34

SIZE	NOMINAL TORQUE [kNm] **Tk**	MAX TORQUE [kNm] **Tf**	MAX SPEED [1/min] **nk**	MIN MAX [mm] **d**	DIMENSIONS [mm] D	C	A	A1	A2	E	F	G	H	MASS ① M [Kg]	MOMENT OF INERTIA ① J [Kgm²]	GREASE QUANTITY [Kg]	TORSIONAL STIFFNESS ① Kx10⁶ [Nm/rad]
1.0	1.10	2.20	6000	20-44	116	43	3	5	7	84	60	39	1.5	4	0.005	0.08	3.020
1.5	2.45	4.90	4620	25-61	152	50	3	8	13	104	79	48.5	1.5	9.5	0.020	0.09	6.050
2.0	4.60	9.20	4140	35-75	178	62	3	14	25	127	101	60	1.5	15.5	0.044	0.16	9.250
2.5	7.85	15.70	4000	40-95	213	76	5	12	19	156	123.5	69.5	2.5	27	0.112	0.27	17.30
3.0	12.00	24.00	3860	50-110	240	90	5	24	43	179	145.5	85.5	2.5	39	0.203	0.47	20.30
3.5	17.00	34.00	3720	55-127	280	105	6	27	48	206	167	98	3	65	0.460	0.68	33.60
4.0	26.75	53.50	3190	65-150	318	120	6	32	58	240	196	111	3	94	0.844	0.93	53.00
4.5	36.65	73.30	2900	72-171	346	135	8	37	66	269	216	123	4	125	1.325	1.54	78.90
5.0	52.65	105.3	2570	80-182	389	150	8	50	92	299	247	140	4	183	2.531	2.28	93.10
5.5	80.00	160.0	2330	90-200	425	175	8	53	98	329	273	158	4	242	3.725	3.10	103.1
6.0	90.50	181.0	2150	95-225	457	190	8	58	108	358	292	169	4	298	5.291	3.90	148.4
7.0	137.0	274.0	1800	115-270	527	220	10	72	134	416	342	195	5	453	10.48	6.20	184.0
8.0	149.6	299.2	1700	125-290	590	250	10	74	138	460	368	198	5	617	17.72	7.40	345.1
9.0	206.6	413.2	1600	140-330	660	275	12	81	150	512	420	200	6	868	31.35	9.20	469.2

NOTE 1 - Values are calculated for solid hubs.

SID-N, SID-R & SID-RR COUPLINGS

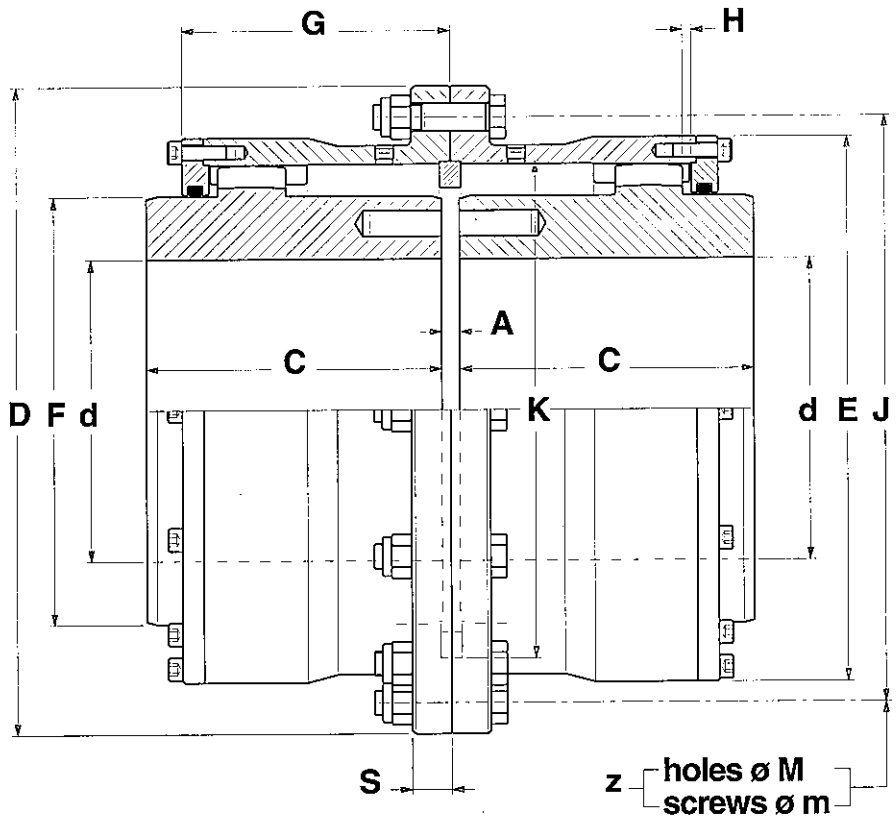

Fig. 40 - SID-N Coupling

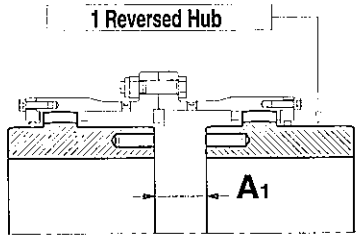

Fig. 41 - SID-R Coupling

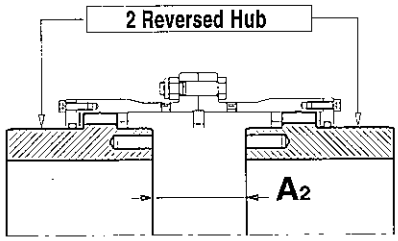

Fig. 42 - SID-RR Coupling

DENOMINATION EXAMPLE:
SID GEAR COUPLING SIZE 110

SID-110N Coupling

TAB. 35

SIZE	NOMINAL TORQUE [kNm] Tk	MAX TORQUE [kNm] Tf	MAX SPEED [1/min] nk	MAX [mm] d	DIMENSIONS [mm] D	C	A	A1	A2	E	F	G	H	J	z	M	m	K	S
30	3.00	6.00	6530	60	145	60	3	14	25	114	85	58	2	125	6	8	7.9	105	10
40	4.80	9.60	5220	70	170	68	4	24	44	136	104	68	2	150	8	10	9.8	125	12
50	7.60	15.20	4450	85	200	80	5	26	47	157	121	78	3	175	8	12	11.8	145	14
60	11.30	22.60	3660	100	225	90	6	34	62	182	143	88	3	200	10	12	11.8	170	16
70	17.50	35.00	3220	110	245	105	7	39	71	202	160	104	4	220	10	12	11.8	190	16
80	24.50	49.00	2870	125	275	120	8	46	84	225	175	116	4	245	12	14	13.8	210	18
90	29.80	59.60	2620	135	295	135	9	49	59	245	190	127	5	265	12	14	13.8	230	18
100	40.60	81.20	2310	150	330	150	10	56	102	272	215	140	5	295	12	16	15.8	255	20
110	66.00	132.0	1980	170	365	165	10	57	104	307	241	150	5	330	12	16	15.8	280	22
125	82.50	165.0	1790	185	390	185	12	71	130	330	260	170	6	355	12	18	17.7	310	25
140	101.5	203.0	1630	200	430	210	14	70	126	362	285	185	7	390	12	20	19.7	340	28
160	158.0	316.0	1420	225	480	240	16	82	148	409	317	210	8	440	12	22	21.7	385	32
180	216.0	432.0	1220	260	535	270	18	94	170	457	368	235	9	490	12	24	23.6	430	36
200	289.0	578.0	1070	295	595	300	20	106	192	508	418	260	10	545	12	27	26.6	480	40

AO-HLC & AO-HLR SPACER COUPLINGS

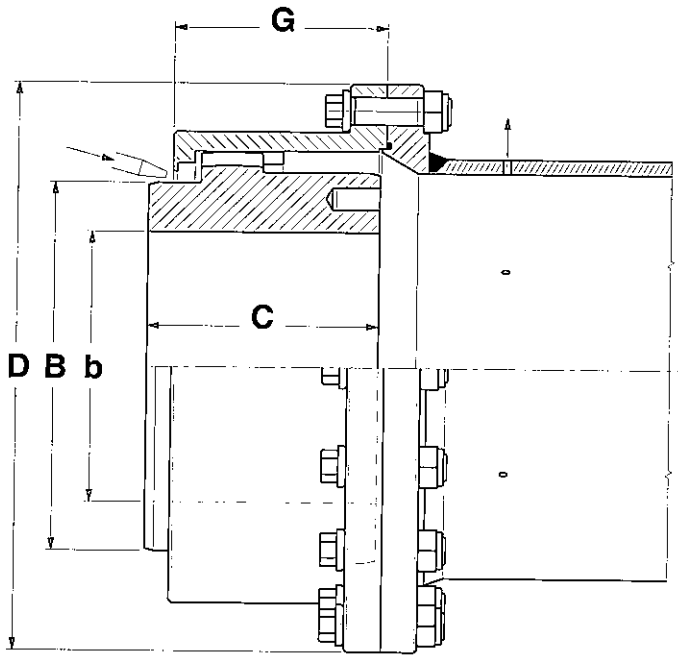

Fig. 43 - AO-HLC Spacer Coupling

CONTINUOUS OIL LUBRICATION

DENOMINATION EXAMPLE:
AO-HLC SPACER COUPLING SIZE 6

AO-6HLC Spacer Coupling

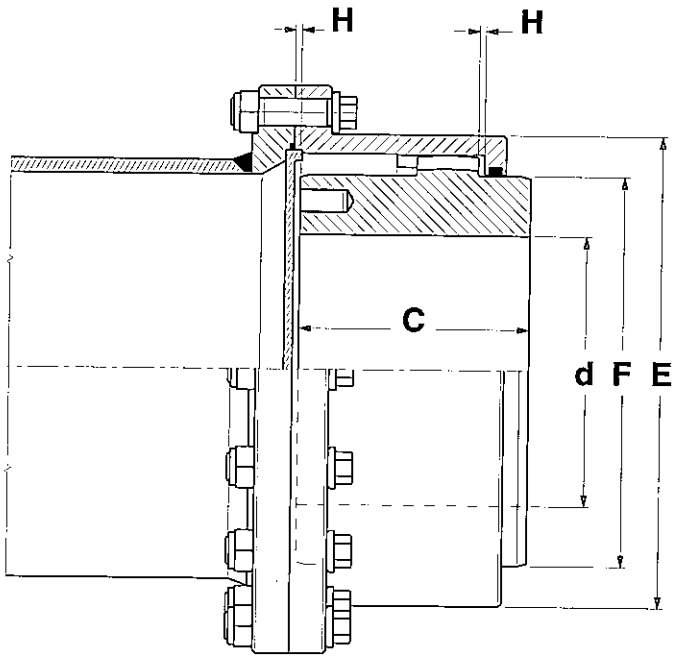

Fig. 44 - AO-HLR Spacer Coupling

PACKED GREASE LUBRICATION

DENOMINATION EXAMPLE:
AO-HLR SPACER COUPLING SIZE 6

AO-6HLR Spacer Coupling

TAB. 36

SIZE	NOMINAL TORQUE [kNm] Tk	MAX TORQUE [kNm] Tf	MAX SPEED [1/min] nk	MAX [mm] b	MAX [mm] d	DIMENSIONS [mm] D	C	E	B	F	G	H
1	2.76	6.62	6930	58	62	142	50	104.5	80	85	45.5	1.5
2	5.55	13.30	6210	72	78	168	62	130.5	100	107	59	1.5
3	8.70	20.90	6000	90	98	200	76	158.5	123	133	68.5	2.5
4	14.10	33.80	5790	104	112	225	90	183.5	142	152	82.5	2.5
5	22.80	54.70	5580	124	132	265	105	211.5	168	178	93	3
6	34.80	83.50	4780	146	156	300	120	245.5	197	209	106	3
7	44.00	105.6	4350	165	174	330	135	275	222	234	118	4
8	69.80	167.5	3850	180	190	370	150	307	240	254	138	4
9	83.80	201.2	3490	200	210	406	175	335	265	279	154	4
10	152.0	364.8	3220	220	233	438	190	367	290	305	166	4
11	203.5	488.4	2700	265	280	505	220	423	340	355	193	5

MILL MOTORS AISE 600-800 SERIES COUPLINGS

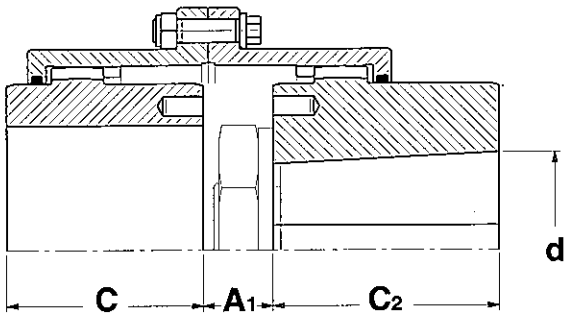

Es. GO-AM Coupling size 6 for 614 motor

Fig. 45 - GO-6AM.614 Coupling

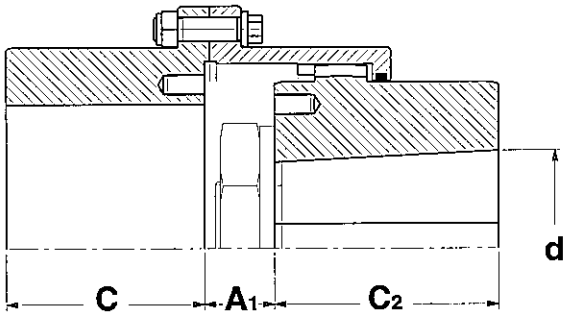

Es. GO-FAM Coupling size 6 for 614 motor

Fig. 46 - GO-6AM.614 Coupling

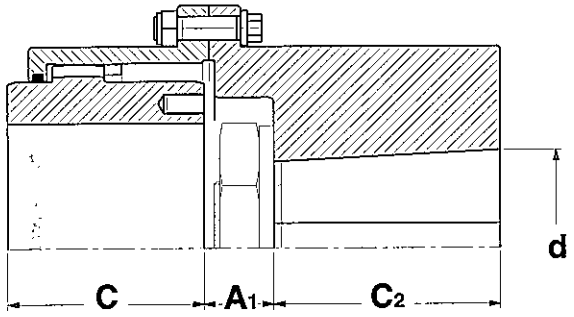

Es. GO-FM Coupling size 6 for 614 motor

Fig. 47 - GO-6FM.614 Coupling

Taper ratio 1:9.6 (1.25" : 12")
Tapered Keyway

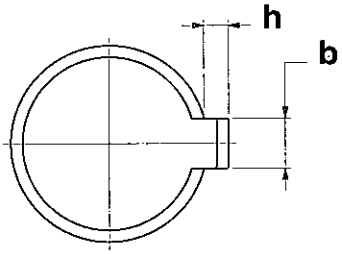

TAB. 37

MILL MOTOR AISE 600-800 SERIES SIZE	DIMENSIONS [mm]					A1 [mm] Coupling size										
	[in] d	[mm]	b	h	C2	0A	1A	2A	3A	4A	5A	6A	7A	8A	9A	10A
602-802	1.750"	44.450	12.70	6.35	75	28	28	28								
603-803 / **604-804**	2.000"	50.800	12.70	6.35	88		30	30	32							
606-806	2.500"	63.500	12.70	6.35	100			33	35	35						
608-808	3.000"	76.200	19.05	6.35	113				38	38	39					
610-810	3.250"	82.550	19.05	6.35	113					41	42	42				
612-812	3.750"	92.075	19.05	6.35	125					45	46	46	48			
614-814	4.250"	107.950	25.40	9.52	125						49	49	51	51		
616-816	4.625"	117.475	31.75	9.52	138						52	52	54	54		
618-818	5.000"	127.000	31.75	12.70	150							41	43	43	43	43
620-820	5.875"	149.225	38.10	19.05	170								53	53	53	53
622-822	6.250"	158.750	38.10	19.05	183									70	70	70
624-824	7.000"	177.800	38.10	19.05	233										70	70

TAB. 38 - Hubs Shrinkfitting - MAX TORQUES

SHAFT	COUPLING SIZE	0	1	2	3	4	5	6	7	8	9	10	11
	Hub Lenght C	43	50	62	76	90	105	120	135	150	175	190	220
Ø30	Max Torque [kNm]	0.622											
	Min/Max Interference [µm]	44/70											
Ø35	Max Torque [kNm]	0.742											
	Min/Max Interference [µm]	48/80											
Ø40	Max Torque [kNm]	0.938	1.306										
	Min/Max Interference [µm]	57/89	58/90										
Ø45	Max Torque [kNm]	1.088	1.613										
	Min/Max Interference [µm]	66/98	67/99										
Ø50	Max Torque [kNm]	1.142	1.914	2.667									
	Min/Max Interference [µm]	74/106	77/109	73/105									
Ø55	Max Torque [kNm]		1.955	2.894									
	Min/Max Interference [µm]		80/116	76/114									
Ø60	Max Torque [kNm]		2.051	3.387	4.887								
	Min/Max Interference [µm]		88/126	86/124	87/125								
Ø65	Max Torque [kNm]			3.732	5.650								
	Min/Max Interference [µm]			94/132	96/134								
Ø70	Max Torque [kNm]			4.034	6.385	8.327							
	Min/Max Interference [µm]			103/141	105/143	106/144							
Ø75	Max Torque [kNm]			4.175	7.064	9.369							
	Min/Max Interference [µm]			111/149	114/152	115/153							
Ø80	Max Torque [kNm]				7.661	10.37	13.47						
	Min/Max Interference [µm]				123/161	124/162	125/163						
Ø85	Max Torque [kNm]				7.679	10.75	14.21						
	Min/Max Interference [µm]				125/169	127/171	128/172						
Ø90	Max Torque [kNm]				8.034	11.58	15.73	19.68					
	Min/Max Interference [µm]				134/178	136/180	138/182	138/182					
Ø100	Max Torque [kNm]					12.76	18.33	23.77	28.54				
	Min/Max Interference [µm]					153/197	156/200	157/201	158/202				
Ø110	Max Torque [kNm]					13.10	20.33	27.52	33.56				
	Min/Max Interference [µm]					169/213	173/217	175/219	176/220				
Ø120	Max Torque [kNm]						21.62	30.87	38.39	45.20			
	Min/Max Interference [µm]						190/234	193/237	194/238	195/239			
Ø130	Max Torque [kNm]						21.15	32.59	41.77	49.79			
	Min/Max Interference [µm]						200/250	205/255	207/257	208/258			
Ø140	Max Torque [kNm]							34.15	45.38	55.18	65.66		
	Min/Max Interference [µm]							221/271	224/274	226/276	215/265		
Ø150	Max Torque [kNm]							34.62	48.15	59.91	72.39		
	Min/Max Interference [µm]							237/287	241/291	244/294	232/282		
Ø160	Max Torque [kNm]								49.84	63.49	78.48	92.40	
	Min/Max Interference [µm]								258/308	261/311	249/299	250/300	
Ø170	Max Torque [kNm]								49.99	65.68	83.67	100.4	
	Min/Max Interference [µm]								274/324	277/327	266/316	268/318	
Ø180	Max Torque [kNm]									66.46	87.40	107.1	
	Min/Max Interference [µm]									293/343	282/332	285/335	
Ø190	Max Torque [kNm]									63.83	87.23	109.2	
	Min/Max Interference [µm]									301/359	290/348	293/351	
Ø200	Max Torque [kNm]										87.70	113.2	159.5
	Min/Max Interference [µm]										305/363	309/367	314/372
Ø210	Max Torque [kNm]										86.01	115.1	168.5
	Min/Max Interference [µm]										319/377	324/382	331/389
Ø220	Max Torque [kNm]											115.6	175.5
	Min/Max Interference [µm]											340/398	347/405
Ø230	Max Torque [kNm]											113.3	181.1
	Min/Max Interference [µm]											354/412	363/421
Ø240	Max Torque [kNm]												184.3
	Min/Max Interference [µm]												378/436
Ø250	Max Torque [kNm]												186.0
	Min/Max Interference [µm]												394/452
Ø260	Max Torque [kNm]												182.1
	Min/Max Interference [µm]												403/467
Ø270	Max Torque [kNm]												178.1
	Min/Max Interference [µm]												417/481
Ø280	Max Torque [kNm]												171.2
	Min/Max Interference [µm]												431/495

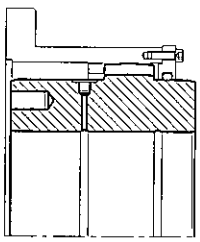

DENOMINATION EXAMPLE:
GO-A COUPLING SIZE 6 FOR SHRINKFITTING AND OIL PRESSURE REMOVAL

GO-6A.W Coupling

NOTE: The max torques are calculated with a friction coefficient µ=0.12, with the min and max interferences (in Micron) and a max hub stress equal to the 80% of the material yielding.

The max torques value vary linearly with the increasing of the hub lenght C and with the friction coefficient µ, which can be 0.15, 0.18 or 0.20 max.

TECHNICAL DATA

GO-A COUPLINGS

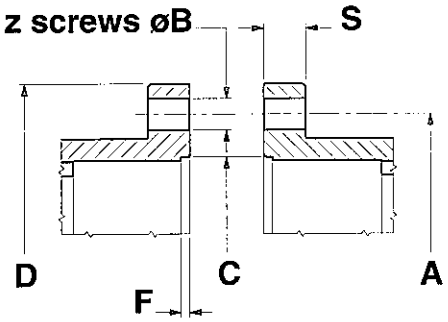

Female Sleeves
for GO-0A ÷ GO-11A

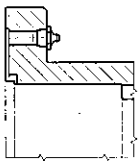

2 G1/8" grease nipples at 180°
on each sleeve

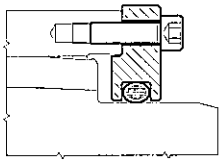

Removable side flanges design,
available on demand for sizes from 4 to 11
denomination example GO-6A.C

TAB. 39

SIZE	Flange Dimensions [mm] D	S	H7 C	F	A	z	H8-d8 B	Tightening Torque [Nm]
0	111	12	80	3	96	6	8/M8	18
1	142	10	100	3	122	8	10/M10	36
2	168	10	122	3	148	10	10/M10	36
3	200	13	148	3	178	10	12/M12	65
4	225	13	172	3	203	12	12/M12	65
5	265	22	200	4	236	12	16/M16	150
6	300	22	232	4	270	14	16/M16	150
7	330	22	260	5	300	14	16/M16	150
8	370	24	286	5	335	14	18/M18	220
9	406	25	315	5	368	14	22/M22	400
10	438	25	345	5	400	14	22/M22	400
11	505	28	400	6	460	16	24/M24	520

TAB. 40

SIZE	Hub Dia. F	Max bore with 1 keyway max d	Key bxh	max k	Max bore with 2 keyway max d	Key bxh	max k	Extraction Holes No. 2 holes a 180° G	M	
0	69	48	14x9	51.8	52	16x10	60.6	61	M5x15	
1	85	62	16x10	66.4	62	18x11	70.8	73	M6x20	On demand
2	107	72	20x12	76.9	78	22x14	88.8	91	M8x20	On demand
3	133	90	25x14	95.4	98	28x16	110.8	115	M10x20	On demand
4	152	105	28x16	111.4	112	32x18	126.8	132	M12x20	On demand
5	178	122	32x18	129.4	132	36x20	148.8	154	M12x20	
6	209	144	36x20	152.4	156	40x22	174.8	180	M16x25	
7	234	160	40x22	169.4	174	45x25	194.8	204	M16x25	Standard
8	254	175	45x25	185.4	190	45x25	210.8	220	M20x35	Standard
9	279	192	45x25	202.4	210	50x28	232.8	240	M20x35	Standard
10	305	210	50x28	221.4	233	56x32	257.8	268	M24x45	Standard
11	355	245	56x32	257.4	280	63x32	304.8	316	M24x45	Standard

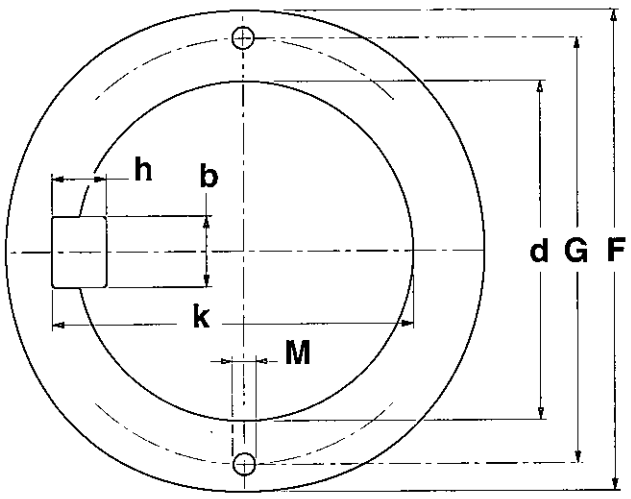

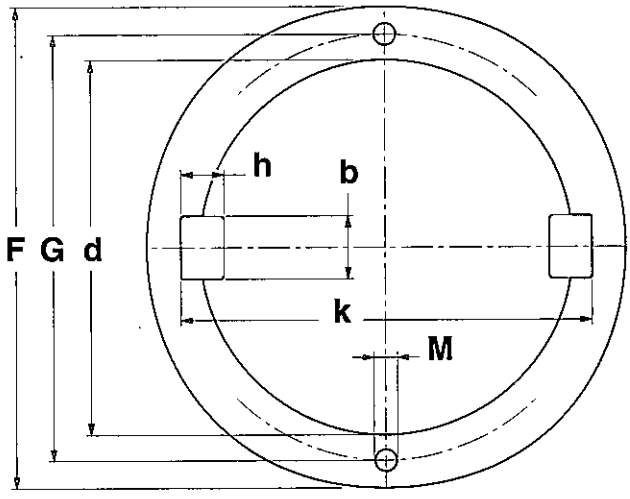

GO-B COUPLINGS

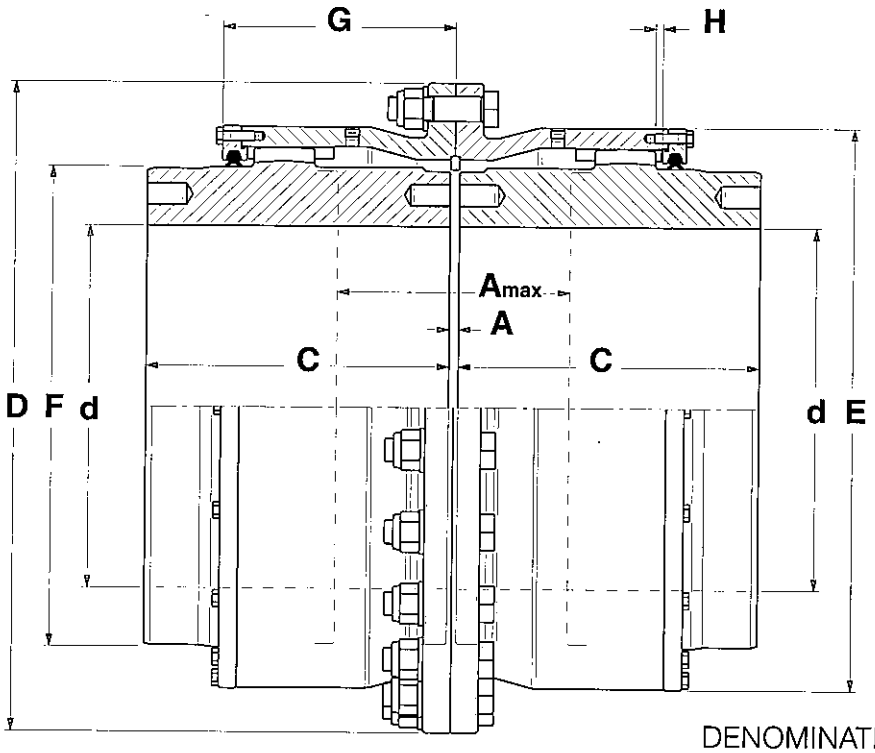

Fig. 48 - GO-B Coupling

DENOMINATION EXAMPLE:
GO-B GEAR COUPLING SIZE 10

GO-10B Coupling

TAB. 41

SIZE	NOMINAL TORQUE [kNm] Tk	MAX TORQUE [kNm] Tf	MAX SPEED [1/min] nk	MAX [mm] d	DIMENSIONS [mm] D	C	A	max A	E	F	G	H	MASS ① M [Kg]	MOMENT OF INERTIA ① J [Kgm²]	GREASE QUANTITY [Kg]	TORSIONAL STIFFNESS ① Kx10⁶ [Nm/rad]
4	277	554	1140	325	580	250	12	196	493	400	221	9	688	20.753	5	565.1
5	383	766	1010	370	630	275	12	228	543	450	245	9	926	33.678	6	691.4
6	493	986	920	400	700	305	12	254	587	490	262	9	1231	53.496	8	838.3
7	660	1320	810	430	760	330	12	278	647	550	280	9	1613	84.161	10	1042.5
8	840	1680	720	475	825	355	12	294	712	610	292	9	2089	129.95	12	1444.2
9	990	1980	670	510	885	380	20	320	753	650	315	15	2517	178.43	18	1642.4
10	1195	2390	630	530	935	410	20	336	803	680	327	15	3011	237.68	21	2168.0
11	1555	3110	560	580	1010	430	20	358	878	750	346	15	3787	355.39	25	2787.5
12	1815	3630	530	610	1085	460	30	384	928	790	385	22	4550	482.71	38	3256.2
13	2510	5020	470	680	1185	510	30	426	1028	870	414	22	6080	777.01	48	4493.0
14	3530	7060	400	780	1340	560	30	494	1163	1000	460	22	8720	1444.6	60	6243.1
15	4440	8880	360	860	1440	610	40	556	1263	1100	507	30	11262	2193.5	85	7462.5
16	5920	11840	320	950	1575	660	40	624	1398	1220	568	30	14864	3520.8	105	9721.0
17	7180	14360	300	1020	1705	710	40	676	1498	1310	602	30	18347	4990.2	120	11349
18	8500	17000	270	1090	1805	760	40	730	1598	1400	635	30	22210	6824.4	135	13377
19	10600	21200	250	1180	1935	810	40	800	1728	1520	680	30	27637	9884..0	160	15846

NOTE 1 - Values are calculated for solid hubs.

TECHNICAL DATA

GO-B.HT COUPLINGS

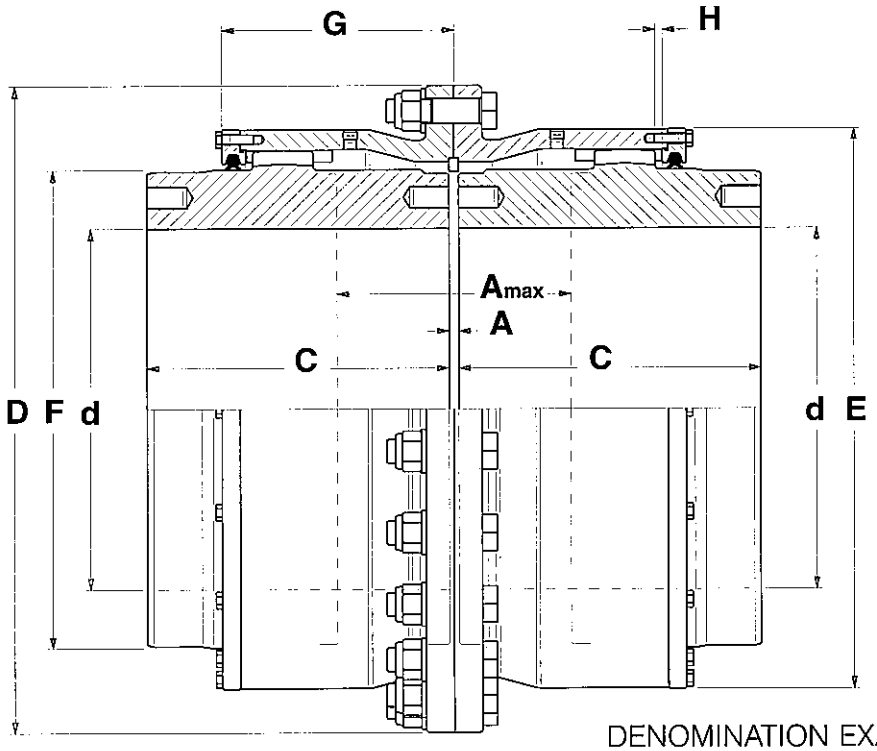

Fig. 49 - GO-B.HT Coupling

DENOMINATION EXAMPLE:
GO-B.HT GEAR COUPLING SIZE 10

GO-10B.HT Coupling

TAB. 42

SIZE	NOMINAL TORQUE [kNm] Tk	MAX TORQUE [kNm] Tf	MAX SPEED [1/min] nk	MAX [mm] d	DIMENSIONS [mm] D	C	A	max A	E	F	G	H	MASS ① M [Kg]	MOMENT OF INERTIA ① J [Kgm²]	GREASE QUANTITY [Kg]	TORSIONAL STIFFNESS ① Kx10⁶ [Nm/rad]
4	417	834	1950	325	580	250	12	196	493	400	221	9	688	20.753	5	565.1
5	563	1126	1730	370	630	275	12	228	543	450	245	9	926	33.678	6	691.4
6	745	1490	1570	400	700	305	12	254	587	490	262	9	1231	53.496	8	838.3
7	980	1960	1380	430	760	330	12	278	647	550	280	9	1613	84.161	10	1042.5
8	1235	2470	1230	475	825	355	12	294	712	610	292	9	2089	129.95	12	1444.2
9	1455	2910	1150	510	885	380	20	320	753	650	315	15	2517	178.43	18	1642.4
10	1785	3570	1080	530	935	410	20	336	803	680	327	15	3011	237.68	21	2168.0
11	2290	4580	960	580	1010	430	20	358	878	750	346	15	3787	355.39	25	2787.5
12	2670	5340	900	610	1085	460	30	384	928	790	385	22	4550	482.71	38	3256.2
13	3790	7580	800	680	1185	510	30	426	1028	870	414	22	6080	777.01	48	4493.0
14	5260	10520	690	780	1340	560	30	494	1163	1000	460	22	8720	1444.6	60	6243.1
15	6540	13080	620	860	1440	610	40	556	1263	1100	507	30	11262	2193.5	85	7462.5
16	8750	17500	550	950	1575	660	40	624	1398	1220	568	30	14864	3520.8	105	9721.0
17	10580	21160	510	1020	1705	710	40	676	1498	1310	602	30	18347	4990.2	120	11349
18	12540	25080	470	1090	1805	760	40	730	1598	1400	635	30	22210	6824.4	135	13377
19	15630	31260	430	1180	1935	810	40	800	1728	1520	680	30	27637	9884..0	160	15846

NOTE 1 - Values are calculated for solid hubs.

AO-B SPACER COUPLINGS

TECHNICAL DATA

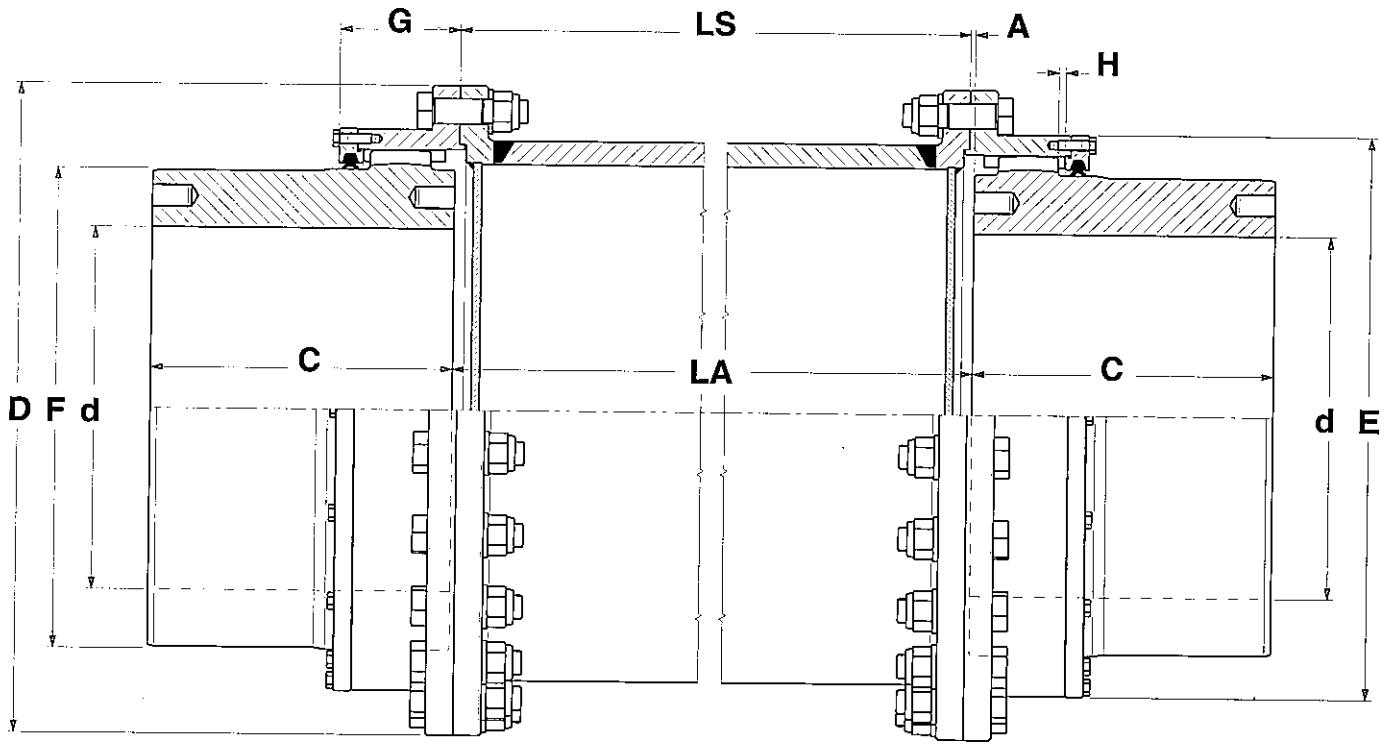

DENOMINATION EXAMPLE:
AO-B SPACER COUPLING SIZE 10

AO-10B Spacer Coupling

Fig. 50 - AO-B Spacer Coupling

TAB. 43

SIZE	NOMINAL TORQUE [kNm] Tk	MAX TORQUE [kNm] Tf	MAX SPEED [1/min] nk	MAX [mm] d	DIMENSIONS [mm] D	C	A	min LA	E	F	G	H	MASS ① M [Kg]	MOMENT OF INERTIA ① J [Kgm²]	GREASE QUANTITY [Kg]	TORSIONAL STIFFNESS ① Kx10⁶ [Nm/rad]
4	277	554	1140	325	580	250	6	310	493	400	129	9	907	31.391	5	104.46
5	383	766	1010	370	630	275	6	330	543	450	137	9	1157	47.756	6	144.00
6	493	986	920	400	700	305	6	350	587	490	141	9	1575	79.562	8	233.86
7	660	1320	810	430	760	330	6	380	647	550	147	9	1942	113.95	10	275.35
8	840	1680	720	475	825	355	6	400	712	610	151	9	2446	168.00	12	357.23
9	990	1980	670	510	885	380	10	420	753	650	165	15	2935	231.45	18	466.72
10	1195	2390	630	530	935	410	10	440	803	680	169	15	3421	297.16	21	630.77
11	1555	3110	560	580	1010	430	10	460	878	750	177	15	4278	438.38	25	838.33
12	1815	3630	530	610	1085	460	15	480	928	790	208	22	5105	592.01	38	1011.2
13	2510	5020	470	680	1185	510	15	530	1028	870	216	22	6763	935.77	48	1638.5
14	3530	7060	400	780	1340	560	15	600	1163	1000	228	22	9535	1694.3	60	2400.2
15	4440	8880	360	860	1440	610	20	660	1263	1100	249	30	12212	2527.1	85	3526.9
16	5920	11840	320	950	1575	660	20	730	1398	1220	276	30	15788	3900.2	105	4742.9
17	7180	14360	300	1020	1705	710	20	780	1498	1310	284	30	19434	5499.1	120	6442.5
18	8500	17000	270	1090	1805	760	20	830	1598	1400	290	30	23412	7470.7	135	7950.1
19	10600	21200	250	1180	1935	810	20	900	1728	1520	300	30	28830	10609	160	9737.2

NOTE 1 - Values are calculated for solid hubs and spacer lenght LS=1000 [mm].

TECHNICAL DATA

AO-B.HT SPACER COUPLINGS

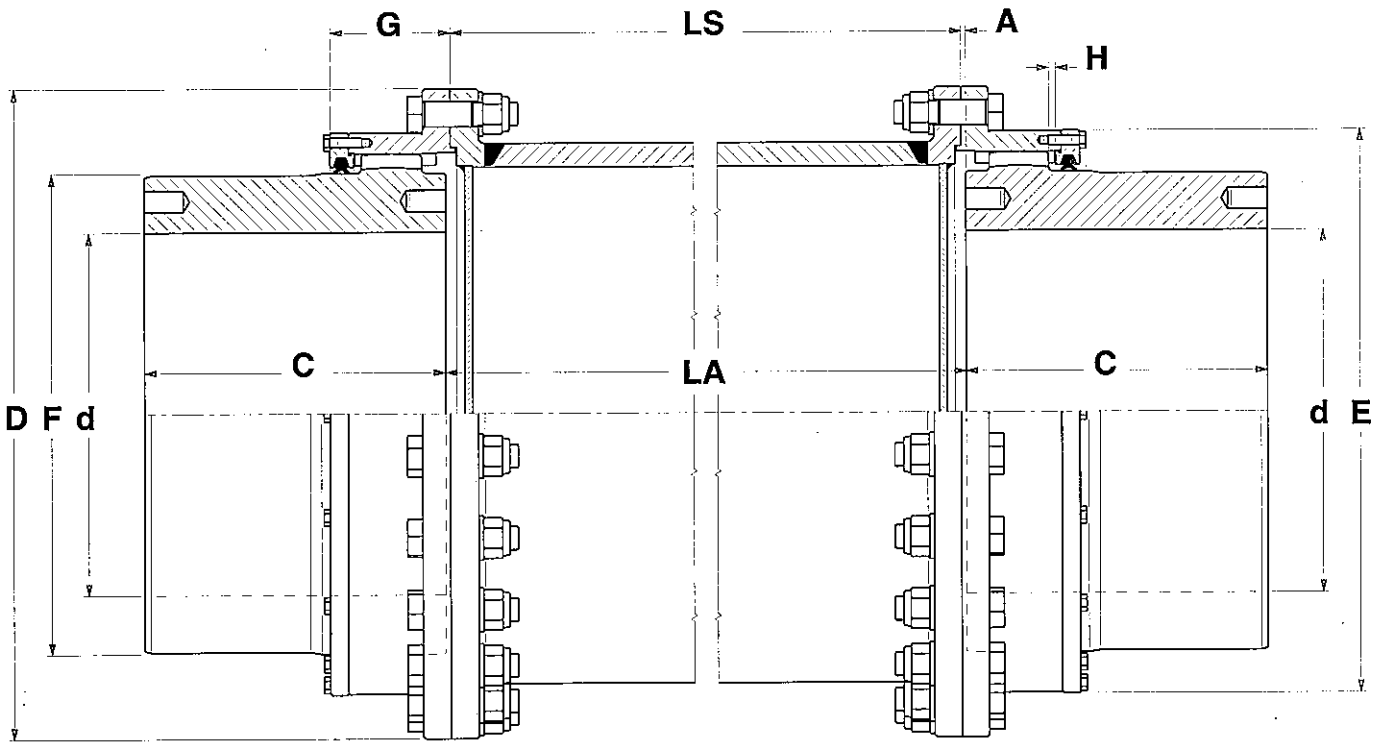

DENOMINATION EXAMPLE:
AO-B.HT SPACER COUPLING SIZE 10

AO-10B.HT Spacer Coupling

Fig. 51 - AO-B.HT Spacer Coupling

TAB. 44

SIZE	NOMINAL TORQUE [kNm] Tk	MAX TORQUE [kNm] Tf	MAX SPEED [1/min] nk	MAX [mm] d	DIMENSIONS [mm] D	C	A	min LA	E	F	G	H	MASS ① M [Kg]	MOMENT OF INERTIA ① J [Kgm²]	GREASE QUANTITY [Kg]	TORSIONAL STIFFNESS ① Kx10⁶ [Nm/rad]
4	417	834	1950	325	580	250	6	310	493	400	129	9	953	33.402	5	123.95
5	563	1126	1730	370	630	275	6	330	543	450	137	9	1263	53.267	6	184.39
6	745	1490	1570	400	700	305	6	350	587	490	141	9	1627	83.042	8	278.96
7	980	1960	1380	430	760	330	6	380	647	550	147	9	2108	126.50	10	411.93
8	1235	2470	1230	475	825	355	6	400	712	610	151	9	2622	184.28	12	535.13
9	1455	2910	1150	510	885	380	10	420	753	650	165	15	3128	251.85	18	672.17
10	1785	3570	1080	530	935	410	10	440	803	680	169	15	3634	322.83	21	835.26
11	2290	4580	960	580	1010	430	10	460	878	750	177	15	4538	476.84	25	1215.8
12	2670	5340	900	610	1085	460	15	480	928	790	208	22	5380	638.08	38	1467.8
13	3790	7580	800	680	1185	510	15	530	1028	870	216	22	7072	997.96	48	2246.9
14	5260	10520	690	780	1340	560	15	600	1163	1000	228	22	9990	1808.6	60	3579.5
15	6540	13080	620	860	1440	610	20	660	1263	1100	249	30	12588	2641.8	85	4641.4
16	8750	17500	550	950	1575	660	20	730	1398	1220	276	30	16339	4107.2	105	6718.0
17	10580	21160	510	1020	1705	710	20	780	1498	1310	284	30	20151	5824.8	120	8767.6
18	12540	25080	470	1090	1805	760	20	830	1598	1400	290	30	24030	7773.3	135	10837
19	15630	31260	430	1160	1935	810	20	900	1728	1520	300	30	29828	11137	160	14868

NOTE 1 - Values are calculated for solid hubs and spacer lenght LS=1000 [mm].

GO-FB COUPLINGS

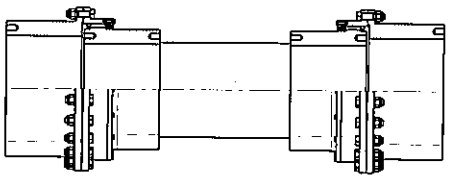

Fig. 53 - AO-FB.C
Floating Shaft Coupling

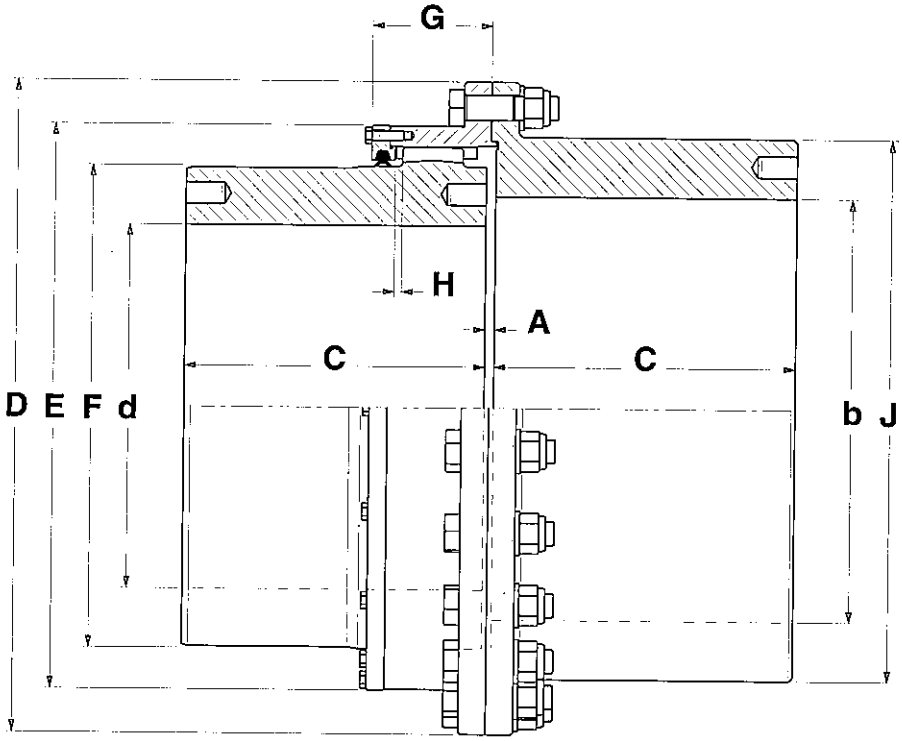

Fig. 54 - AO-FB.D
Floating Shaft Coupling

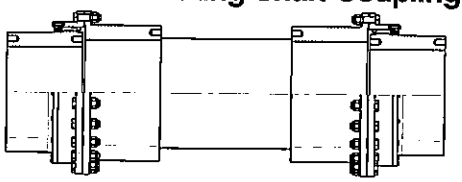

DENOMINATION EXAMPLE:
FB GEAR COUPLING SIZE 10

Fig. 52 - GO-FB Coupling **GO-10FB Coupling**

TAB. 45

SIZE	NOMINAL TORQUE [kNm] Tk	MAX TORQUE [kNm] Tf	MAX SPEED [t/min] nk	MAX [mm] d	MAX [mm] b	DIMENSIONS [mm] D	C	A	E	F	J	G	H	MASS ① M [Kg]	MOMENT OF INERTIA ① J [Kgm²]	GREASE QUANTITY [Kg]	TORSIONAL STIFFNESS ① Kx10⁶ [Nm/rad]
4	277	554	1140	325	365	580	250	12	493	400	475	129	9	718	21.146	5	1579.5
5	383	766	1010	370	400	630	275	12	543	450	525	137	9	946	34.040	6	2014.5
6	493	986	920	400	430	700	305	12	587	490	560	141	9	1231	52.567	8	2376.8
7	660	1320	810	430	475	760	330	12	647	550	620	147	9	1718	87.832	10	2788.9
8	840	1680	720	475	525	825	355	12	712	610	685	151	9	2140	132.08	12	4427.2
9	990	1980	670	510	560	885	380	20	753	650	725	165	15	2690	188.07	18	6459.5
10	1195	2390	630	530	600	935	410	20	803	680	775	169	15	3090	244.05	21	7182.8
11	1555	3110	560	580	650	1010	430	20	878	750	850	177	15	3880	364.85	25	10328
12	1815	3630	530	610	690	1085	460	30	928	790	900	208	22	4685	498.50	38	12053
13	2510	5020	470	680	770	1185	510	30	1028	870	1000	216	22	6330	817.15	48	16167
14	3530	7060	400	780	870	1340	560	30	1163	1000	1130	228	22	8950	1487.4	60	24079
15	4440	8880	360	860	950	1440	610	40	1263	1100	1230	249	30	11500	2245.3	85	29315
16	5920	11840	320	950	1050	1575	660	40	1398	1220	1365	276	30	15220	3620.5	105	40272
17	7180	14360	300	1020	1120	1705	710	40	1498	1310	1455	284	30	18710	5097.2	120	49803
18	8500	17000	270	1090	1200	1805	760	40	1598	1400	1555	290	30	22750	7027.1	135	60398
19	10600	21200	250	1180	1300	1935	810	40	1728	1520	1685	300	30	28360	10219	160	76531

NOTE 1 - Values are calculated for solid hubs and refer to GO-FB gear couplings only.

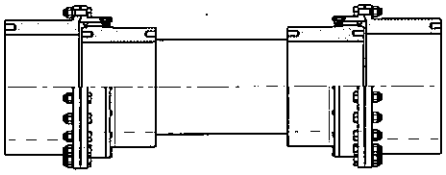

Fig. 56 - AO-FB.HT.C
Floating Shaft Coupling

Fig. 57 - AO-FB.HT.D
Floating Shaft Coupling

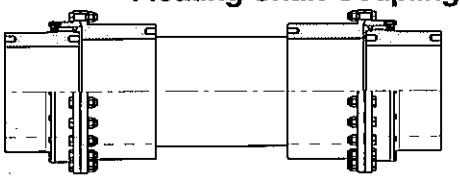

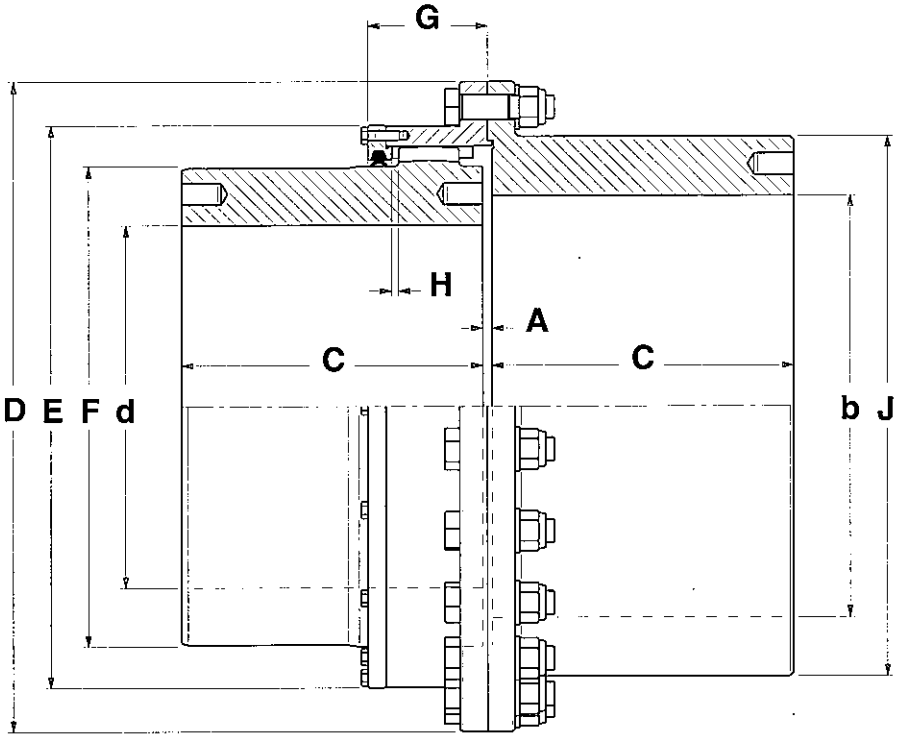

DENOMINATION EXAMPLE:
GO-FB.HT GEAR COUPLING SIZE 10

GO-10FB.HT Coupling

Fig. 55 - GO-FB.HT Coupling

TAB. 46

SIZE	NOMINAL TORQUE [kNm] Tk	MAX TORQUE [kNm] Tf	MAX SPEED [1/min] nk	MAX [mm] d	MAX [mm] b	DIMENSIONS [mm] D	C	A	E	F	J	G	H	MASS ① M [Kg]	MOMENT OF INERTIA ① J [Kgm²]	GREASE QUANTITY [Kg]	TORSIONAL STIFFNESS ① Kx10⁶ [Nm/rad]
4	417	834	1950	325	365	580	250	12	493	400	475	129	9	718	21.146	5	1579.5
5	563	1126	1730	370	400	630	275	12	543	450	525	137	9	946	34.040	6	2014.5
6	745	1490	1570	400	430	700	305	12	587	490	560	141	9	1231	52.567	8	2376.8
7	980	1960	1380	430	475	760	330	12	647	550	620	147	9	1718	87.832	10	2788.9
8	1235	2470	1230	475	525	825	355	12	712	610	685	151	9	2140	132.08	12	4427.2
9	1455	2910	1150	510	560	885	380	20	753	650	725	165	15	2690	188.07	18	6459.5
10	1785	3570	1080	530	600	935	410	20	803	680	775	169	15	3090	244.05	21	7182.8
11	2290	4580	960	580	650	1010	430	20	878	750	850	177	15	3880	364.85	25	10328
12	2670	5340	900	610	690	1085	460	30	928	790	900	208	22	4685	498.50	38	12053
13	3790	7580	800	680	770	1185	510	30	1028	870	1000	216	22	6330	817.15	48	16167
14	5260	10520	690	780	870	1340	560	30	1163	1000	1130	228	22	8950	1487.4	60	24079
15	6540	13080	620	860	950	1440	610	40	1263	1100	1230	249	30	11500	2245.3	85	29315
16	8750	17500	550	950	1050	1575	660	40	1398	1220	1365	276	30	15220	3620.5	105	40272
17	10580	21160	510	1020	1120	1705	710	40	1498	1310	1455	284	30	18710	5097.2	120	49803
18	12540	25080	470	1090	1200	1805	760	40	1598	1400	1555	290	30	22750	7027.1	135	60398
19	15630	31260	430	1180	1300	1935	810	40	1728	1520	1685	300	30	28360	10219	160	76531

NOTE 1 - Values are calculated for solid hubs and refer to GO-FB gear couplings only.

GO-MB COUPLINGS

TECHNICAL DATA

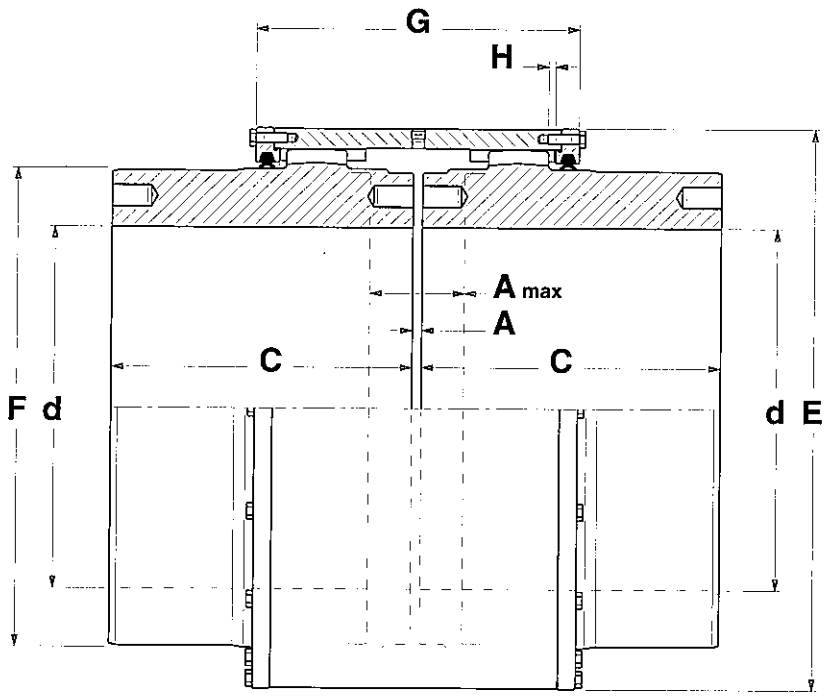

Fig. 58 - GO-MB Coupling

DENOMINATION EXAMPLE:
GO-MB GEAR COUPLING SIZE 10

GO-10MB Coupling

TAB. 47

SIZE	NOMINAL TORQUE [kNm] Tk	MAX TORQUE [kNm] Tf	MAX SPEED [1/min] nk	MAX [mm] d	DIMENSIONS [mm] E	C	A	max A	F	G	H	MASS ① M [Kg]	MOMENT OF INERTIA ① J [Kgm²]	GREASE QUANTITY [Kg]	TORSIONAL STIFFNESS ① Kx10⁶ [Nm/rad]
4	277	554	1140	325	493	250	12	72	400	318	9	612	16.225	5	920.4
5	383	766	1010	370	543	275	12	88	450	350	9	832	26.829	6	1042.2
6	493	986	920	400	587	305	12	102	490	372	9	1078	40.279	8	1277.4
7	660	1320	810	430	647	330	12	114	550	396	9	1437	65.727	10	1597.3
8	840	1680	720	475	712	355	12	122	610	412	9	1885	104.55	12	2234.0
9	990	1980	670	510	753	380	20	136	650	446	15	2276	142.17	18	2527.5
10	1195	2390	630	530	803	410	20	144	680	462	15	2721	189.82	21	3284.2
11	1555	3110	560	580	878	430	20	154	750	488	15	3451	290.10	25	4271.8
12	1815	3630	530	610	928	460	30	160	790	546	22	4114	385.88	38	5033.9
13	2510	5020	470	680	1028	510	30	166	870	568	22	5140	628.05	48	7191.8
14	3530	7060	400	780	1163	560	30	192	1000	618	22	7900	1163.3	60	10258
15	4440	8880	360	860	1263	610	40	216	1100	674	30	10300	1806.9	85	12697
16	5920	11840	320	950	1398	660	40	238	1220	750	30	13690	2950.1	105	17230
17	7180	14360	300	1020	1498	710	40	254	1310	782	30	16890	4167.4	120	21016
18	8500	17000	270	1090	1598	760	40	270	1400	810	30	20545	5759.7	135	25456
19	10600	21200	250	1180	1728	810	40	290	1520	850	30	25710	8450.7	160	30996

NOTE 1 - Values are calculated for solid hubs.

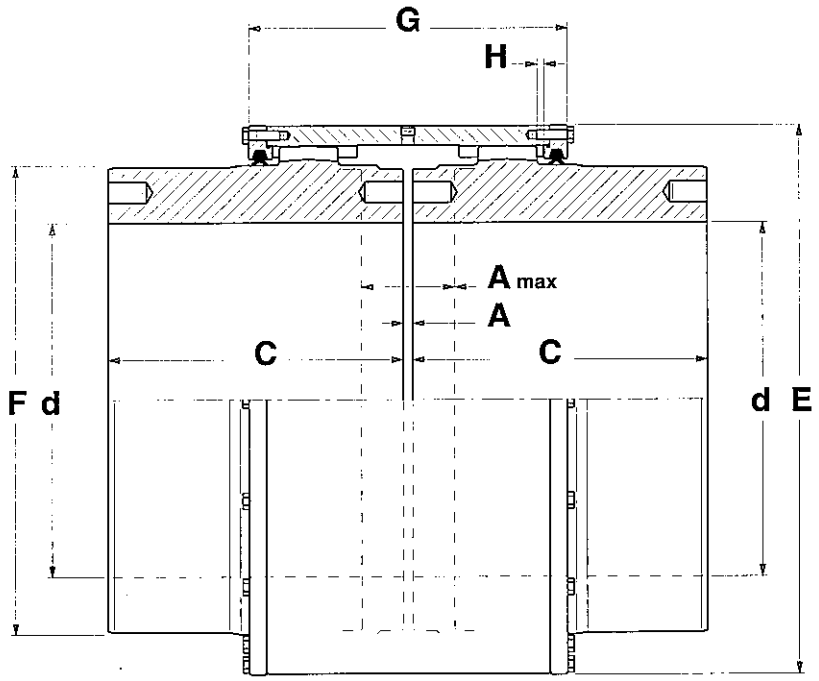

Fig. 59 - GO-MB.HT Coupling

DENOMINATION EXAMPLE:
GO-MB.HT GEAR COUPLING SIZE 10

GO-10MB.HT Coupling

TAB. 48

SIZE	NOMINAL TORQUE [kNm] **Tk**	MAX TORQUE [kNm] **Tf**	MAX SPEED [1/min] **nk**	MAX [mm] **d**	DIMENSIONS [mm] **E**	**C**	**A**	max **A**	**F**	**G**	**H**	MASS ① M [Kg]	MOMENT OF INERTIA ① J [Kgm²]	GREASE QUANTITY [Kg]	TORSIONAL STIFFNESS ① Kx10⁶ [Nm/rad]
4	417	834	1950	325	493	250	12	72	400	318	9	612	16.225	5	920.4
5	563	1126	1730	370	543	275	12	88	450	350	9	832	26.829	6	1042.2
6	745	1490	1570	400	587	305	12	102	490	372	9	1078	40.279	8	1277.4
7	980	1960	1380	430	647	330	12	114	550	396	9	1437	65.727	10	1597.3
8	1235	2470	1230	475	712	355	12	122	610	412	9	1885	104.55	12	2234.0
9	1455	2910	1150	510	753	380	20	136	650	446	15	2276	142.17	18	2527.5
10	1785	3570	1080	530	803	410	20	144	680	462	15	2721	189.82	21	3284.2
11	2290	4580	960	580	878	430	20	154	750	488	15	3451	290.10	25	4271.8
12	2670	5340	900	610	928	460	30	160	790	546	22	4114	385.88	38	5033.9
13	3790	7580	800	680	1028	510	30	166	870	568	22	5140	628.05	48	7191.8
14	5260	10520	690	780	1163	560	30	192	1000	618	22	7900	1163.3	60	10258
15	6540	13080	620	860	1263	610	40	216	1100	674	30	10300	1806.9	85	12697
16	8750	17500	550	950	1398	660	40	238	1220	750	30	13690	2950.1	105	17230
17	10580	21160	510	1020	1498	710	40	254	1310	782	30	16890	4167.4	120	21016
18	12540	25080	470	1090	1598	760	40	270	1400	810	30	20545	5759.7	135	25456
19	15630	31260	430	1180	1728	810	40	290	1520	850	30	25710	8450.7	160	30996

NOTE 1 - Values are calculated for solid hubs.

GO-B.W & AO-B.W COUPLINGS

TECHNICAL DATA

TAB. 49 - Hubs Shrinkfitting - MAX TORQUES

SHAFT	COUPLING SIZE	4	5	6	7	8	9	10	11	12	13	14	15	16	17	18	19
	Hub Lenght C	250	275	305	330	355	380	410	430	460	510	560	610	660	710	760	810
Ø200	Max Torque [kNm]	233.9															
	Min/Max Interference [µm]	367/425															
Ø225	Max Torque [kNm]	273.4															
	Min/Max Interference [µm]	417/475															
Ø250	Max Torque [kNm]	304.1	383.7														
	Min/Max Interference [µm]	467/525	472/530														
Ø275	Max Torque [kNm]	330.0	414.7	507.9													
	Min/Max Interference [µm]	531/595	511/557	516/580													
Ø300	Max Torque [kNm]	321.6	437.2	555.6	681.6												
	Min/Max Interference [µm]	571/635	556/620	566/360	571/635												
Ø325	Max Torque [kNm]	286.0	457.9	575.1	729.2	870.4											
	Min/Max Interference [µm]	603/675	623/695	603/675	608/680	613/685											
Ø350	Max Torque [kNm]		433.8	582.7	778.0	950.8	1077										
	Min/Max Interference [µm]		663/735	648/720	658/730	663/735	663/735										
Ø375	Max Torque [kNm]		381.5	586.1	801.7	1010	1167	1314									
	Min/Max Interference [µm]		703/775	718/790	703/775	708/780	713/785	713/785									
Ø400	Max Torque [kNm]			531.8	796.2	1058	1242	1411									
	Min/Max Interference [µm]			758/830	743/815	758/830	763/835	763/835									
Ø425	Max Torque [kNm]				789.6	1064	1276	1474	1734								
	Min/Max Interference [µm]				810/890	795/875	800/880	805/885	810/890								
Ø450	Max Torque [kNm]					1049	1299	1521	1839	2076							
	Min/Max Interference [µm]					835/915	845/925	850/930	860/940	860/940							
Ø475	Max Torque [kNm]					1003	1285	1541	1912	2193							
	Min/Max Interference [µm]					875/955	885/965	895/975	905/985	910/990							
Ø500	Max Torque [kNm]						1233	1497	1961	2275	2848						
	Min/Max Interference [µm]						920/1000	920/1000	950/1030	955/1035	965/1045						
Ø525	Max Torque [kNm]							1445	1964	2324	2964						
	Min/Max Interference [µm]							962/1050	987/1075	997/1085	1007/1095						
Ø550	Max Torque [kNm]								1941	2338	3064						
	Min/Max Interference [µm]								1027/1115	1037/1125	1052/1140						
Ø575	Max Torque [kNm]								1881	2328	3135	3960					
	Min/Max Interference [µm]								1067/1155	1082/1170	1097/1185	1062/1150					
Ø600	Max Torque [kNm]									2258	3158	4119					
	Min/Max Interference [µm]									1117/1205	1137/1225	1107/1195					
Ø625	Max Torque [kNm]										3157	4253					
	Min/Max Interference [µm]										1182/1270	1152/1240					
Ø650	Max Torque [kNm]										3068	4312	5316				
	Min/Max Interference [µm]										1210/1310	1185/1285	1190/1290				
Ø675	Max Torque [kNm]										2966	4365	5512				
	Min/Max Interference [µm]										1250/1350	1225/1325	1240/1340				
Ø700	Max Torque [kNm]											4380	5655	6925			
	Min/Max Interference [µm]											1265/1365	1285/1385	1290/1390			
Ø725	Max Torque [kNm]											4370	5764	7159			
	Min/Max Interference [µm]											1310/1410	1330/1430	1335/1435			
Ø750	Max Torque [kNm]											4298	5812	7391	8654		
	Min/Max Interference [µm]											1350/1450	1370/1470	1385/1485	1395/1495		
Ø775	Max Torque [kNm]											4144	5797	7562	8927		
	Min/Max Interference [µm]											1380/1480	1405/1505	1430/1530	1440/1540		
Ø800	Max Torque [kNm]												5757	7695	9169	10541	
	Min/Max Interference [µm]												1445/1545	1475/1575	1485/1585	1485/1585	
Ø850	Max Torque [kNm]												5497	7722	9469	11053	12989
	Min/Max Interference [µm]												1518/1630	1543/1655	1563/1675	1563/1675	1583/1695
Ø900	Max Torque [kNm]													7619	9613	11504	13736
	Min/Max Interference [µm]													1623/1735	1643/1755	1653/1765	1673/1785
Ø950	Max Torque [kNm]													7289	9583	11776	14339
	Min/Max Interference [µm]													1703/1815	1728/1840	1743/1855	1763/1875
Ø1000	Max Torque [kNm]														9264	11835	14767
	Min/Max Interference [µm]														1803/1915	1833/1945	1853/1965
Ø1050	Max Torque [kNm]															11433	14794
	Min/Max Interference [µm]															1888/2020	1918/2050
Ø1100	Max Torque [kNm]															10919	14708
	Min/Max Interference [µm]															1968/2100	1998/2130
Ø1150	Max Torque [kNm]																14287
	Min/Max Interference [µm]																2068/2200

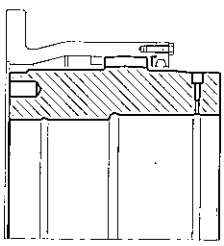

DENOMINATION EXAMPLE:
GO-B COUPLING SIZE 10 FOR
SHRINKFITTING AND OIL PRESSURE
REMOVAL

GO-10B.W Coupling

NOTE: The max torques are calculated with a friction coefficiunt µ=0.12, with the min and max interferences (in Micron) and a max hub stress equal to the 80% of the material yielding.

The max torques value vary linearly with the increasing of the hub lenght C and with the friction coefficient µ, which can be 0.15, 0.18 or 0.20 max.

TAB. 50 - Hubs Shrinkfitting - MAX TORQUES

SHAFT	COUPLING SIZE	4	5	6	7	8	9	10	11	12	13	14	15	16	17	18	19
	Hub Lenght C	250	275	305	330	355	380	410	430	460	510	560	610	660	710	760	810
Ø200	Max Torque [kNm]	351.8															
	Min/Max Interference [µm]	547/605															
Ø225	Max Torque [kNm]	407.8															
	Min/Max Interference [µm]	617/675															
Ø250	Max Torque [kNm]	450.5	566.4														
	Min/Max Interference [µm]	687/745	692/750														
Ø275	Max Torque [kNm]	494.7	613.4	753.9													
	Min/Max Interference [µm]	791/855	751/815	761/825													
Ø300	Max Torque [kNm]	485.0	649.4	815.5	1004												
	Min/Max Interference [µm]	856/920	821/885	826/890	838/900												
Ø325	Max Torque [kNm]	433.2	644.7	846.8	1083	1289											
	Min/Max Interference [µm]	908/980	873/945	883/955	898/970	903/975											
Ø350	Max Torque [kNm]		609.8	856.8	1144	1402	1597										
	Min/Max Interference [µm]		928/1000	948/1020	963/1035	973/1045	978/1050										
Ø375	Max Torque [kNm]		535.6	826.2	1178	1487	1724	1940									
	Min/Max Interference [µm]		983/1055	1008/1080	1028/1100	1038/1110	1048/1120	1048/1120									
Ø400	Max Torque [kNm]			748.7	1171	1553	1820	2076									
	Min/Max Interference [µm]			1063/1135	1088/1160	1108/1180	1113/1185	1118/1190									
Ø425	Max Torque [kNm]				1115	1560	1874	2161	2547								
	Min/Max Interference [µm]				1140/1220	1160/1240	1170/1250	1175/1255	1185/1265								
Ø450	Max Torque [kNm]					1539	1905	2237	2693	3053							
	Min/Max Interference [µm]					1220/1300	1235/1315	1245/1325	1255/1335	1260/1340							
Ø475	Max Torque [kNm]					1473	1888	2256	2799	3217							
	Min/Max Interference [µm]					1280/1360	1295/1375	1305/1385	1320/1400	1330/1410							
Ø500	Max Torque [kNm]						1822	2229	2869	3335	4176						
	Min/Max Interference [µm]						1355/1435	1365/1445	1385/1465	1395/1475	1410/1490						
Ø525	Max Torque [kNm]							2129	2880	3396	4333						
	Min/Max Interference [µm]							1412/1500	1442/1530	1452/1540	1467/1555						
Ø550	Max Torque [kNm]								2849	3432	4477						
	Min/Max Interference [µm]								1502/1590	1517/1605	1532/1620						
Ø575	Max Torque [kNm]								2754	3404	4592	5297					
	Min/Max Interference [µm]								1557/1645	1577/1665	1602/1690	1417/1505					
Ø600	Max Torque [kNm]									3309	4630	5509					
	Min/Max Interference [µm]									1632/1720	1662/1750	1477/1565					
Ø625	Max Torque [kNm]										4612	5688					
	Min/Max Interference [µm]										1722/1810	1537/1625					
Ø650	Max Torque [kNm]										4502	5763	7143				
	Min/Max Interference [µm]										1770/1870	1580/1680	1595/1695				
Ø675	Max Torque [kNm]										4355	5857	7374				
	Min/Max Interference [µm]										1830/1930	1640/1740	1655/1755				
Ø700	Max Torque [kNm]											5882	7564	9308			
	Min/Max Interference [µm]											1695/1795	1715/1815	1730/1830			
Ø725	Max Torque [kNm]											5834	7687	9620			
	Min/Max Interference [µm]											1745/1845	1770/1870	1790/1890			
Ø750	Max Torque [kNm]											5743	7779	9892	11562		
	Min/Max Interference [µm]											1800/1900	1830/1930	1850/1950	1860/1960		
Ø775	Max Torque [kNm]											5568	7794	10120	11927		
	Min/Max Interference [µm]											1850/1950	1885/1985	1910/2010	1920/2020		
Ø800	Max Torque [kNm]												7725	10272	12249	14154	
	Min/Max Interference [µm]												1935/2035	1965/2065	1980/2080	1990/2090	
Ø850	Max Torque [kNm]												7358	10345	12644	14866	17330
	Min/Max Interference [µm]												2028/2140	2063/2175	2083/2195	2098/2210	2108/2220
Ø900	Max Torque [kNm]													10221	12884	15431	18327
	Min/Max Interference [µm]													2173/2285	2198/2310	2213/2325	2228/2340
Ø950	Max Torque [kNm]													9747	12796	15758	19133
	Min/Max Interference [µm]													2273/2385	2303/2415	2328/2440	2348/2460
Ø1000	Max Torque [kNm]														12396	15770	19664
	Min/Max Interference [µm]														2408/2520	2438/2550	2463/2575
Ø1050	Max Torque [kNm]															15276	19727
	Min/Max Interference [µm]															2518/2650	2553/2685
Ø1100	Max Torque [kNm]															14553	19639
	Min/Max Interference [µm]															2618/2750	2663/2795
Ø1150	Max Torque [kNm]																19124
	Min/Max Interference [µm]																2763/2895

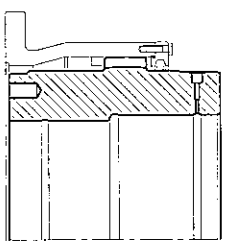

DENOMINATION EXAMPLE:
GO-B.HT COUPLING SIZE 10 FOR SHRINKFITTING AND OIL PRESSURE REMOVAL

GO-10B.HT.W Coupling

NOTE: The max torques are calculated with a friction coefficient µ=0.12, with the min and max interferences (in Micron) and a max hub stress equal to the 80% of the material yielding.

The max torques value vary linearly with the increasing of the hub lenght C and with the friction coefficient µ, which can be 0.15, 0.18 or 0.20 max.

GO-B, AO-B, GO-B.HT & AO-B.HT COUPLINGS

TECHNICAL DATA

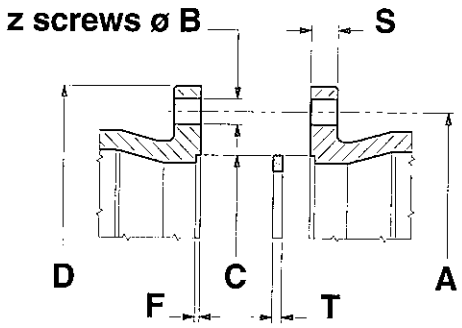

Female sleeves + centering ring
for GO-4B÷9B & GO-4B.HT÷9B.HT

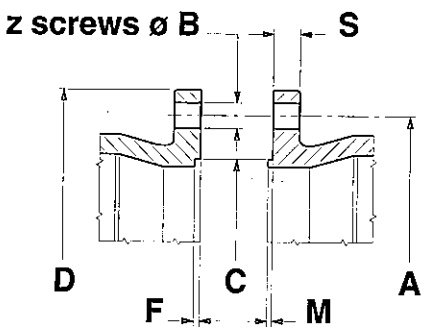

Male sleeve & Female sleeve
for GO-10B÷19B & GO-10.B.HT÷19B.HT

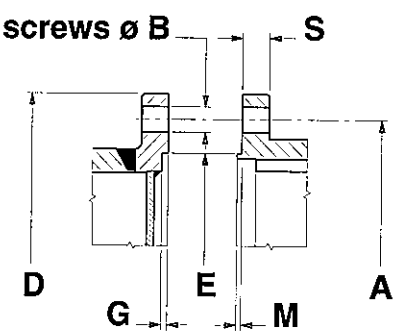

Male sleeve & Female tubular spacer
for AO-4B÷19B & AO-4B.HT÷19B.HT

TAB. 51

SIZE	Flange Dimensions [mm] D	S	H7-f7 C	H7-f7 E	F	T	G	M	A	z	H8-d8 B	Tightening Torque [Nm]
4	580	25	432	462	5	10	7	5	530	18	25/M24	670
5	630	25	480	508	5	10	7	5	580	22	25/M24	670
6	700	35	520	555	5	10	7	5	635	16	32/M30	1250
7	760	35	580	615	5	10	7	5	695	20	32/M30	1250
8	825	35	640	675	5	10	7	5	760	22	32/M30	1250
9	885	40	680	715	8	16	10	8	810	18	38/M36	2170
10	935	40	730	760	10	–	10	8	860	20	38/M36	2170
11	1010	40	810	835	10	–	10	8	935	24	38/M36	2170
12	1085	45	860	885	14	–	14	12	995	20	44/M42	3480
13	1185	45	940	985	14	–	14	12	1095	24	44/M42	3480
14	1340	55	1070	1115	14	–	14	12	1240	24	50/M48	5230
15	1440	55	1170	1215	17	–	17	15	1340	28	50/M48	5230
16	1575	55	1300	1345	17	–	17	15	1475	32	50/M48	5230
17	1705	60	1390	1440	17	–	17	15	1585	28	58/M56	8300
18	1805	60	1490	1535	17	–	17	15	1685	32	58/M56	8300
19	1935	60	1620	1665	17	–	17	15	1815	36	58/M56	8300

TAB. 52

SIZE	Hub Dia. F	Max bore with 1 keyway max d	Key bxh	max k	Max bore with 2 keyway max d	Key bxh	max k
4	400	310	70x45	328.5	325	56x36	356
5	450	340	80x55	363	370	63x40	404
6	490	380	80x55	403.5	400	70x45	439
7	550	400	90x70	430	430	70x45	469
8	610	430	90x70	460.5	475	80x55	523
9	650	450	100x75	482	510	80x55	558
10	680	–	–	–	530	90x70	592
11	750	–	–	–	580	90x70	643
12	790	–	–	–	610	100x75	676
13	870	–	–	–	680	110x80	751
14	1000	–	–	–	780	120x90	860
15	1100	–	–	–	860	130x90	940
16	1220	–	–	–	950	140x100	1040
17	1310	–	–	–	1020	150x110	1120
18	1400	–	–	–	1090	150x110	1190
19	1520	–	–	–	1180	150x110	1280

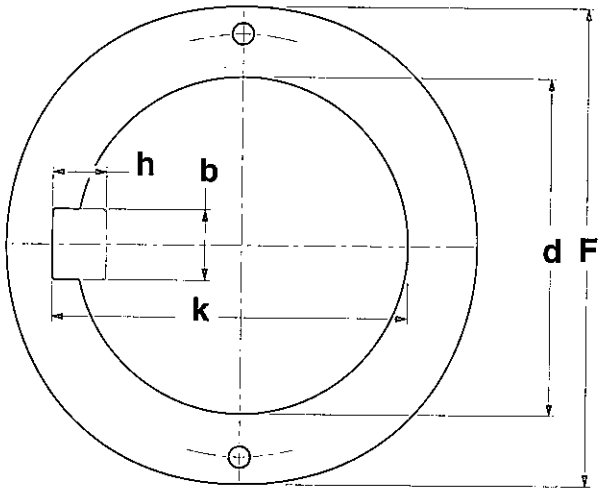

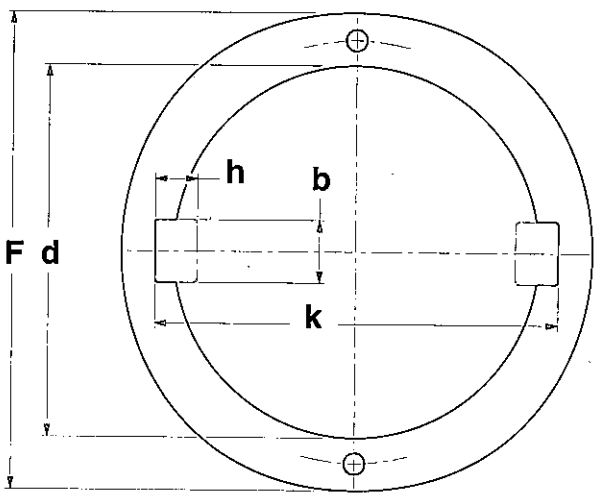

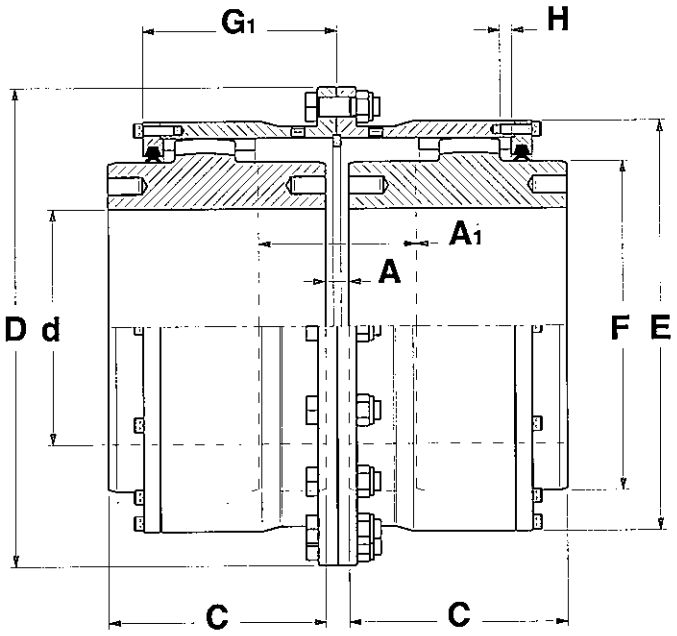

Fig. 60 - G20-F Coupling

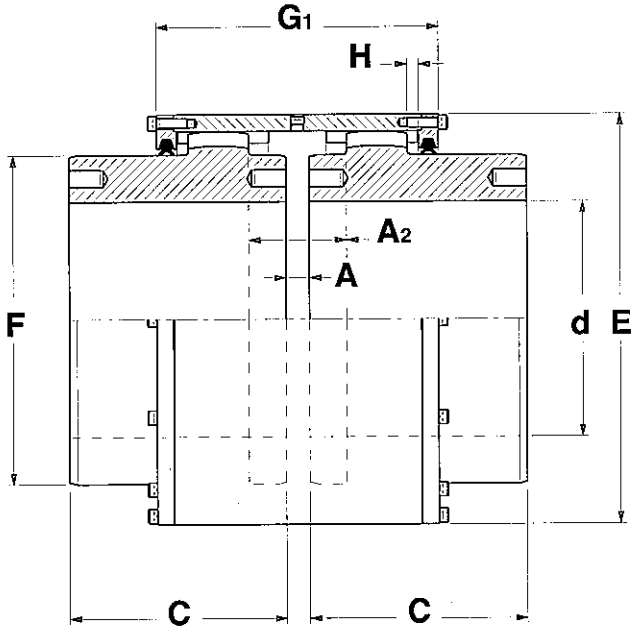

Fig. 61 - G20-M Coupling

G20 SERIES For angular misalignment up to **2°00'**

DENOMINATION EXAMPLE:
G20-F GEAR COUPLING SIZE 30

G20-30F Coupling

DENOMINATION EXAMPLE:
G20-M GEAR COUPLING SIZE 30

G20-30M Coupling

TAB. 53

SIZE	NOMINAL TORQUE [kNm] Tk	MAX TORQUE [kNm] Tf	MAX SPEED [1/min] nk	MAX [mm] d	DIMENSIONS [mm] D	C	A	max A1	max A2	E	F	G1	G2	H	MASS ① M [Kg]	MOMENT OF INERTIA ① J [Kgm²]	GREASE QUANTITY [Kg]	TORSIONAL STIFFNESS ① Kx10⁶ [Nm/rad]
12	14.2	21.3	6980	75	192	90	10	64	40	152	105	88	132	6	24.5	0.0754	0.4	35.229
14	22.3	33.5	5650	90	216	105	10	82	50	176	128	101	150	6	35.5	0.1319	0.7	45.757
17	33	49.5	4720	105	240	120	10	98	58	200	152	113	166	6	52.5	0.2673	0.9	58.975
19	55	82.5	4030	120	274	135	10	110	64	230	170	126	186	9	76.0	0.4932	1.6	88.475
23	84	126	3300	145	312	155	10	130	72	268	206	142	206	9	111	1.0028	2.2	134.42
26	123	184.5	2790	170	364	180	10	148	82	307	242	157	228	9	189	2.1107	2.9	204.24
30	197	295.5	2360	195	410	200	20	150	92	353	274	187	276	12	270	3.9339	5.0	296.27
35	284	426	1990	230	460	230	20	172	102	403	322	206	302	12	403	7.6788	6.5	452.51
40	408	612	1710	260	544	250	20	194	112	453	370	225	328	12	583	14.816	8.2	638.89
46	615	922	1460	300	610	280	30	202	126	523	420	250	364	15	843	27.534	14	937.91
52	850	1275	1260	340	672	310	30	228	138	585	480	271	392	15	1171	47.437	17	1320.4
58	1145	1718	1110	380	734	340	30	252	150	647	540	291	420	15	1754	77.596	21	1758.1

NOTE 1 - Values are calculated for solid hubs and refer to G20-F gear couplings only.

G20-FS SPACER COUPLINGS

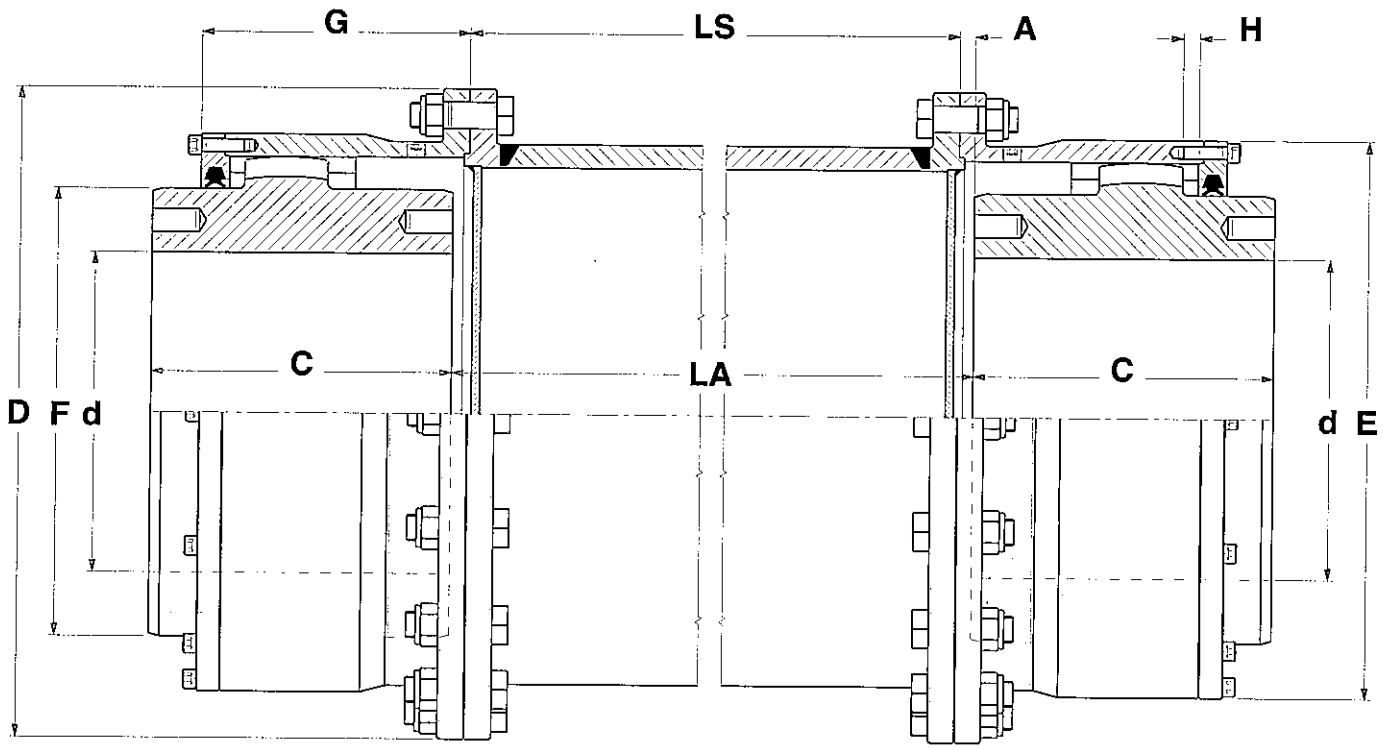

G20 SERIES For angular misalignment up to **2°00'**

Fig. 62 - G20-FS Spacer Coupling

DENOMINATION EXAMPLE:
G20-FS GEAR COUPLING SIZE 30
G20-30FS Coupling

TAB. 54

SIZE	NOMINAL TORQUE [kNm] Tk	MAX TORQUE [kNm] Tf	MAX SPEED [1/min] nk	MAX [mm] d	DIMENSIONS [mm] D	C	A	min LA	E	F	G	H	MASS ① M [Kg]	MOMENT OF INERTIA ① J [Kgm²]	GREASE QUANTITY [Kg]	TORSIONAL STIFFNESS ① Kx10⁶ [Nm/rad]
12	14.2	21.3	6980	75	192	90	5	100	152	105	88	6	31	0.1102	0.4	14.510
14	22.3	33.5	5650	90	216	105	5	110	176	128	101	6	43	0.1890	0.7	19.660
17	33	49.5	4720	105	240	120	5	120	200	152	113	6	63	0.3637	0.9	28.273
19	55	82.5	4030	120	274	135	5	140	230	170	126	9	92	0.6816	1.6	40.310
23	84	126	3300	145	312	155	5	160	268	206	142	9	131	1.3498	2.2	62.265
26	123	184.5	2790	170	364	180	5	180	307	242	157	9	223	2.8525	2.9	95.225
30	197	295.5	2360	195	410	200	10	200	353	274	187	12	312	5.1391	5.0	139.05
35	284	426	1990	230	460	230	10	230	403	322	206	12	465	9.9772	6.5	214.59
40	408	612	1710	260	544	250	10	250	453	370	225	12	688	19.892	8.2	306.00
46	615	922	1460	300	610	280	15	280	523	420	250	15	970	35.799	14	454.22
52	850	1275	1260	340	672	310	15	310	585	480	271	15	1333	60.193	17	605.93
58	1145	1718	1110	380	734	340	15	340	647	540	291	15	1948	96.823	21	801.72

NOTE 1 - Values are calculated for solid hubs and spacer with min LA.

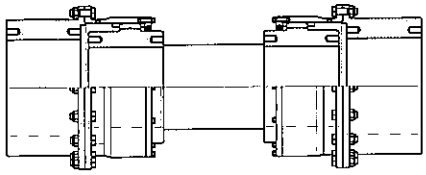

Fig. 64 - G20-FR.C
Floating Shaft Coupling

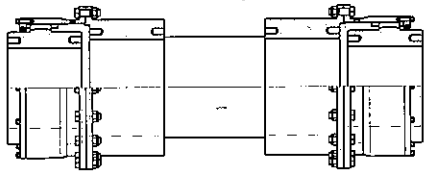

Fig. 65 - G20-FR.D
Floating Shaft Coupling

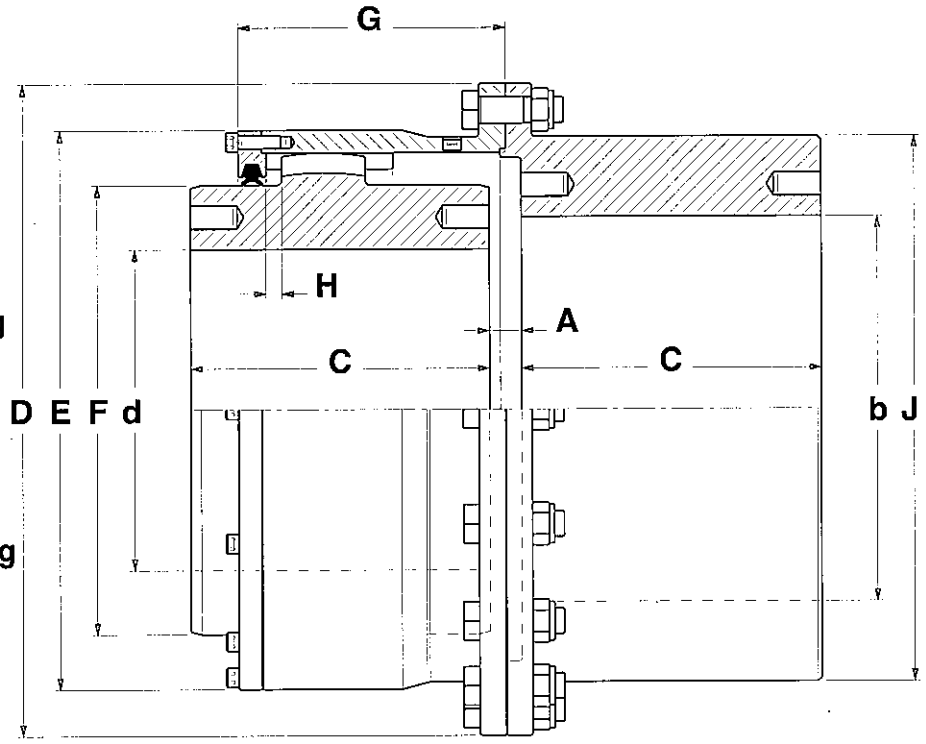

G20 SERIES For angular misalignment up to **2°00'**

Fig. 63 - G20-FR Coupling

DENOMINATION EXAMPLE:
G20-FR GEAR COUPLING SIZE 30
G20-30FR Coupling

TAB. 55

SIZE	NOMINAL TORQUE [kNm] Tk	MAX TORQUE [kNm] Tf	MAX SPEED [1/min] nk	MAX [mm] d	MAX [mm] b	DIMENSIONS [mm] D	C	A	min E	F	J	G	H	MASS ① M [Kg]	MOMENT OF INERTIA ① J [Kgm²]	GREASE QUANTITY [Kg]	TORSIONAL STIFFNESS ① Kx10⁶ [Nm/rad]
12	14.2	21.3	6980	75	100	192	90	10	152	105	145	88	6	25.5	0.0779	0.2	32.580
14	22.3	33.5	5650	90	120	216	105	10	176	128	168	101	6	38	0.1453	0.4	46.375
17	33	49.5	4720	105	135	240	120	10	200	152	192	113	6	55.5	0.2808	0.5	63.911
19	55	82.5	4030	120	155	274	135	10	230	170	222	126	9	81.5	0.5408	0.8	97.053
23	84	126	3300	145	185	312	155	10	268	206	260	142	9	123	1.1130	1.1	151.71
26	123	184.5	2790	170	210	364	180	10	307	242	298	157	9	198	2.3016	1.5	228.50
30	197	295.5	2360	195	240	410	200	20	353	274	344	187	12	288	4.3767	2.5	343.30
35	284	426	1990	230	280	460	230	20	403	322	394	206	12	430	8.4861	3.3	518.99
40	408	612	1710	260	320	544	250	20	453	370	444	225	12	615	16.107	4.1	743.38
46	615	922	1460	300	360	610	280	30	523	420	510	250	15	895	30.246	7	1111.4
52	850	1275	1260	340	410	672	310	30	585	480	572	271	15	1239	51.954	8.5	1569.0
58	1145	1718	1110	380	450	734	340	30	647	540	634	291	15	1751	84.762	10.5	2111.3

NOTE 1 - Values are calculated for solid hubs and refer to G20-FR Couplings only.

G20-F.W, G20-FS.W & G20-FR.W COUPLINGS

TAB. 56 - Hubs Shrinkfitting - MAX TORQUES

SHAFT	COUPLING SIZE	12	14	17	19	23	26	30	35	40	46	52	58
	Hub Lenght C	90	105	120	135	155	180	200	230	250	280	310	340
Ø40	Max Torque [kNm]	5.055											
	Min/Max Interference [µm]	104/136											
Ø50	Max Torque [kNm]	7.600	9.795										
	Min/Max Interference [µm]	135/167	136/168										
Ø60	Max Torque [kNm]	9.468	12.97										
	Min/Max Interference [µm]	159/197	161/199										
Ø70	Max Torque [kNm]	10.88	16.29	21.16									
	Min/Max Interference [µm]	188/226	191/229	193/231									
Ø80	Max Torque [kNm]	10.71	18.78	25.83	31.44								
	Min/Max Interference [µm]	213/251	220/258	223/261	224/262								
Ø90	Max Torque [kNm]		19.29	29.05	36.52								
	Min/Max Interference [µm]		241/285	247/291	249/293								
Ø100	Max Torque [kNm]		18.30	31.40	41.34	52.37							
	Min/Max Interference [µm]		266/310	274/318	278/322	263/307							
Ø110	Max Torque [kNm]			31.97	44.65	60.06							
	Min/Max Interference [µm]			301/345	306/350	292/336							
Ø120	Max Torque [kNm]			29.86	45.87	66.56							
	Min/Max Interference [µm]			325/369	333/377	320/364							
Ø130	Max Torque [kNm]				43.55	69.92	97.45						
	Min/Max Interference [µm]				352/402	340/390	345/395						
Ø140	Max Torque [kNm]					72.64	106.0						
	Min/Max Interference [µm]					366/416	372/422						
Ø150	Max Torque [kNm]					72.52	113.3	144.6					
	Min/Max Interference [µm]					390/440	400/450	404/454					
Ø160	Max Torque [kNm]					69.46	117.5	155.1					
	Min/Max Interference [µm]					414/464	425/475	431/481					
Ø170	Max Torque [kNm]						119.1	163.7					
	Min/Max Interference [µm]						450/500	458/508					
Ø180	Max Torque [kNm]						117.6	169.8	239.7				
	Min/Max Interference [µm]						475/525	485/535	492/542				
Ø190	Max Torque [kNm]						110.0	169.6	249.4				
	Min/Max Interference [µm]						490/548	502/560	511/569				
Ø200	Max Torque [kNm]							168.5	260.7				
	Min/Max Interference [µm]							526/584	538/596				
Ø210	Max Torque [kNm]							163.2	268.7				
	Min/Max Interference [µm]							549/607	564/622				
Ø220	Max Torque [kNm]								272.9	366.5			
	Min/Max Interference [µm]								589/647	600/658			
Ø230	Max Torque [kNm]								273.4	379.7			
	Min/Max Interference [µm]								614/672	626/684			
Ø240	Max Torque [kNm]								269.2	389.9	514.0		
	Min/Max Interference [µm]								638/696	652/710	660/718		
Ø250	Max Torque [kNm]								259.8	395.9	534.7		
	Min/Max Interference [µm]								661/719	677/735	687/745		
Ø260	Max Torque [kNm]									394.4	547.6	611.0	
	Min/Max Interference [µm]									696/760	708/772	624/688	
Ø270	Max Torque [kNm]									392.0	561.1	637.8	
	Min/Max Interference [µm]									721/785	734/798	648/712	
Ø280	Max Torque [kNm]									384.1	570.8	662.4	812.4
	Min/Max Interference [µm]									745/809	760/824	672/736	678/742
Ø290	Max Torque [kNm]									369.8	576.1	684.2	849.6
	Min/Max Interference [µm]									767/831	786/850	696/760	703/767
Ø300	Max Torque [kNm]										575.8	703.1	883.5
	Min/Max Interference [µm]										811/875	720/784	727/791
Ø320	Max Torque [kNm]										550.3	720.3	935.0
	Min/Max Interference [µm]										848/920	758/830	768/840
Ø340	Max Torque [kNm]											726.7	981.4
	Min/Max Interference [µm]											802/874	815/887
Ø360	Max Torque [kNm]											711.5	1010
	Min/Max Interference [µm]											844/916	860/932
Ø380	Max Torque [kNm]												1019
	Min/Max Interference [µm]												904/976
Ø400	Max Torque [kNm]												1004
	Min/Max Interference [µm]												946/1018

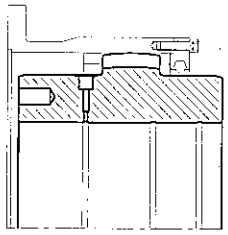

DENOMINATION EXAMPLE:
G20-F COUPLING SIZE 30 FOR SHRINKFITTING AND OIL PRESSURE REMOVAL

G20-30F.W Coupling

NOTE: The max torques are calculated with a friction coefficient µ=0.12, with the min and max interferences (in Micron) and a max hub stress equal to the 80% of the material yielding.

The max torques value vary linearly with the increasing of the hub lenght C and with the friction coefficient µ, which can be 0.15, 0.18 or 0.20 max.

TECHNICAL DATA

G20-F, G20-FS, G20-FR & G20-M COUPLINGS

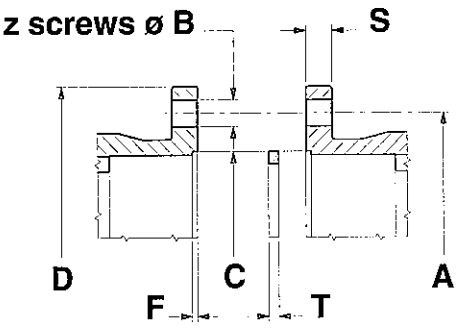

Female Sleeve + Centering Ring
for G20-12F ÷ G20-58F

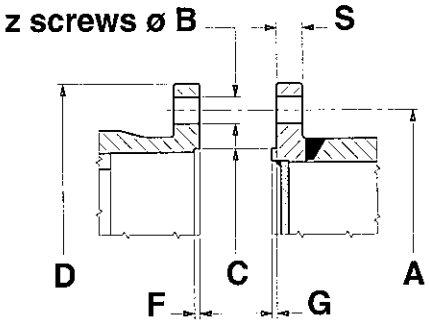

Female Sleeve & Male Spacer
for G20-12FS ÷ G20-58FS

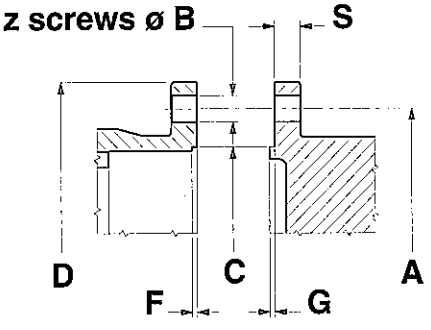

Female Sleeve & Male Rigid Hub
for G20-12FR ÷ G20-58FR

TAB. 57

SIZE	Flange Dimensions [mm] D	S	H7-f7 C	F	T	G	A	z	H8-d8 B	Tightening Torque [Nm]
12	192	11	134	3	6	2	170	8	11/M10	38
14	216	11	158	3	6	2	194	10	11/M10	38
17	240	11	182	3	6	2	218	12	11/M10	38
19	274	13	210	4	8	3	250	12	13/M12	65
23	312	13	246	4	8	3	288	16	13/M12	65
26	364	16	282	4	8	3	332	12	17/M16	155
30	410	16	328	5	10	4	378	18	17/M16	155
35	460	16	376	5	10	4	428	22	17/M16	155
40	544	25	424	5	10	4	494	12	25/M24	520
46	610	25	488	6	12	5	560	16	25/M24	520
52	672	25	548	6	12	5	622	20	25/M24	520
58	734	25	608	6	12	5	684	24	25/M24	520

TAB. 58

SIZE	Hub Dia. F	Max bore with 1 keyway max d	Key bxh	max k	Max bore with 2 keyway max d	Key bxh	max k
12	105	75	20x12	79.9	85	18x11	93.8
14	128	90	25x14	95.4	100	22x14	110.8
17	152	105	28x16	111.4	120	25x14	130.8
19	170	120	32x18	127.4	135	28x16	147.8
23	206	145	36x20	153.4	160	32x18	174.8
26	242	170	40x22	179.4	190	36x20	206.8
30	274	195	45x25	205.4	215	40x22	233.8
35	322	230	50x28	241.4	250	45x25	270.8
40	370	260	56x32	272.4	290	50x28	312.8
46	420	300	70x36	314.4	330	56x32	354.8
52	480	340	80x40	355.4	375	63x32	399.8
58	540	380	80x40	395.4	420	70x36	448.8

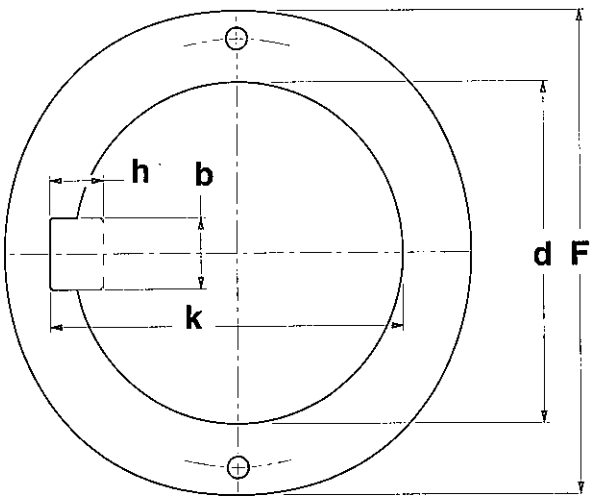

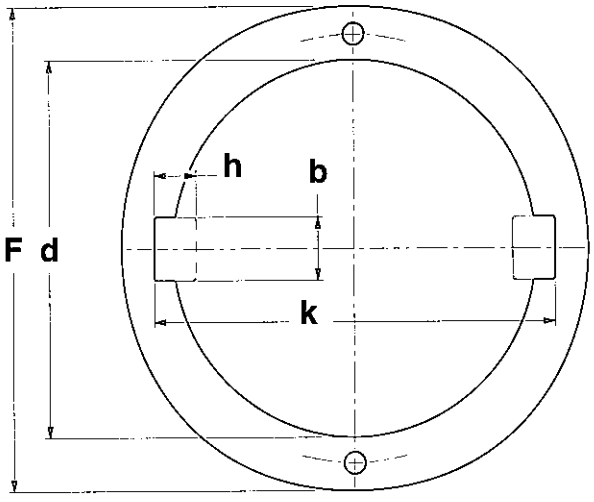

G35 & G60 COUPLINGS

TECHNICAL DATA

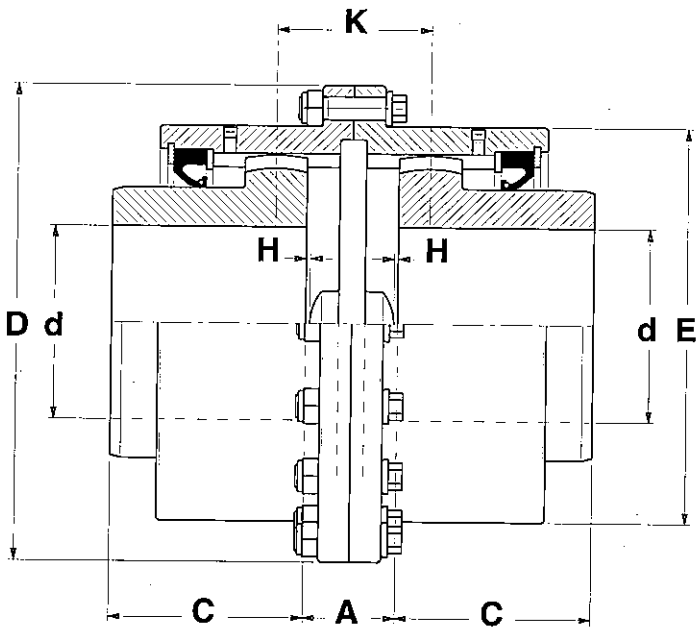

Fig. 66 - G35-F & G60-F Couplings

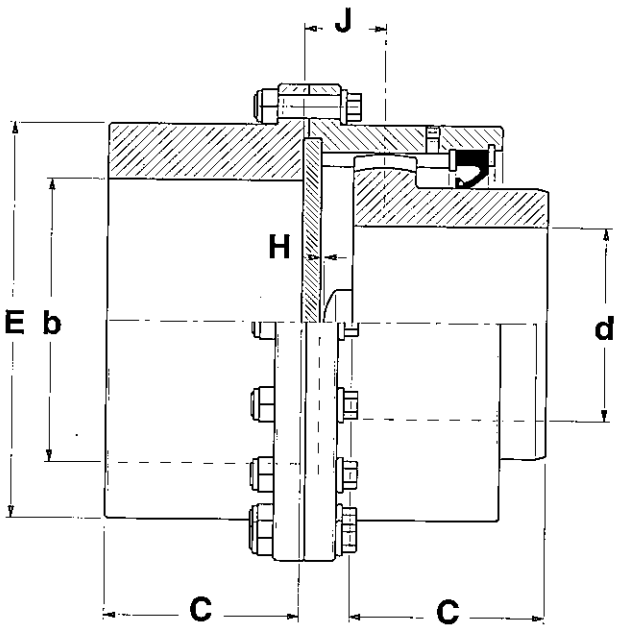

Fig. 67 - G35-FR & G60-FR Couplings

G35 SERIES For angular misalignment up to **3°30'**

G60 SERIES For angular misalignment up to **6°00'**

DENOMINATION EXAMPLE:
G35-F GEAR COUPLING SIZE 60

G35-F60 Coupling

DENOMINATION EXAMPLE:
G60-FR GEAR COUPLING SIZE 60

G60-FR60 Coupling

TAB. 59

SIZE	G35 SERIES NOMINAL TORQUE [kNm] Tk	G35 SERIES MAX TORQUE [kNm] Tf	G60 SERIES NOMINAL TORQUE [kNm] Tk	G60 SERIES MAX TORQUE [kNm] Tf	MAX SPEED [1/min] nk	MAX [mm] d	MAX [mm] b	MAX [mm] f	DIMENSIONS [mm] D	C	A	E	H	J	K	M
10	4.05	8.10	2.40	4.80	3250	44	75	50	142	55	45	104	1	32	61	105
20	10.3	20.6	5.95	11.9	2360	55	90	60	168	70	49	130	1	37	71	130
30	16.4	32.8	9.40	18.8	1810	70	110	75	200	80	55	158	2	41	77	160
40	29.5	59.0	17.0	34.0	1530	90	130	110	225	90	59	183	2	47	89	185
50	39.5	79.0	23.0	46.0	1290	100	150	130	265	105	68	211	3	52	98	215
60	72.0	144.0	43.0	86.0	1090	125	175	150	300	120	74	245	3	61	116	245
70	102.0	204.0	61.0	122.0	950	135	195	170	330	135	80	275	3	67	126	275
80	134.0	268.0	76.0	152.0	850	150	220	190	370	150	84	307	3	70	132	310
90	168.0	336.0	90.0	180.0	760	170	240	210	406	175	104	335	3	81	154	335
100	230.0	460.0	140.0	280.0	680	190	260	230	439	190	104	367	4	86	164	370
110	275.0	550.0	155.0	310.0	560	230	300	275	505	220	106	423	4	89	168	425

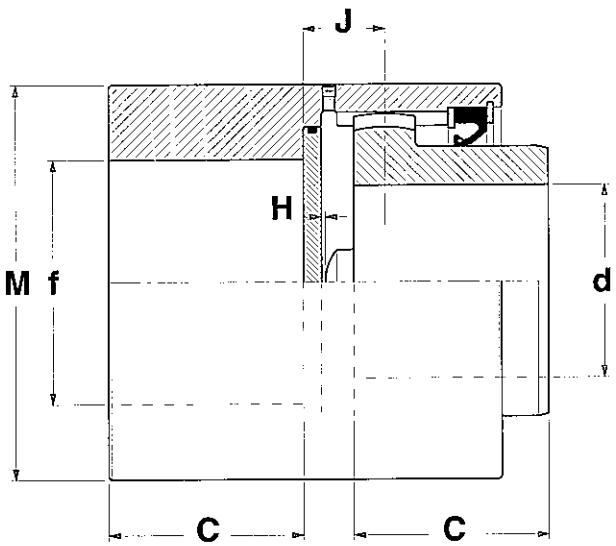

Fig. 68 - G35-M.F. & G60-M.F Couplings

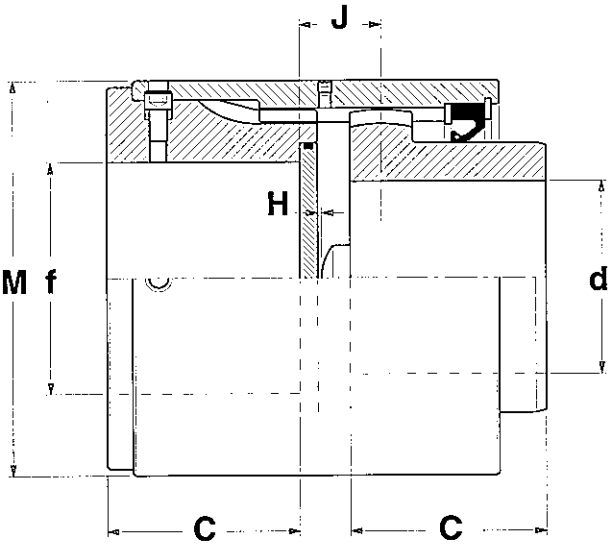

Fig. 69 - G35-M.S & G60-M.S Couplings

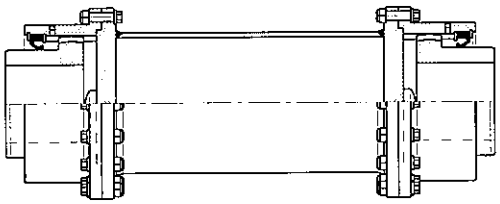

Es. G35-FS SPACER COUPLING SIZE 60

Fig. 70 - G35-FS60
Spacer Coupling

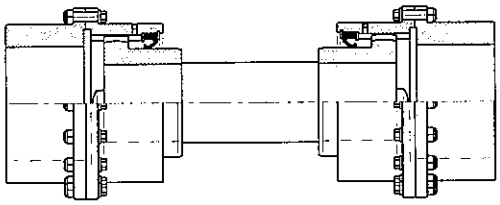

Es. G35-FR FLOATING SHAFT COUPLING SIZE 60

Fig. 71 - G35-FR60
Floating Shaft Coupling

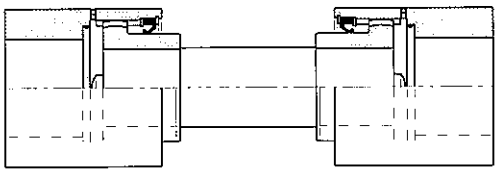

Es. G35-M.FF FLOATING SHAFT COUPLING SIZE 60

Fig. 72 - G35-M60.FF
Floating Shaft Coupling

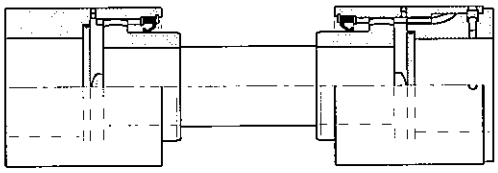

Es. G35-M.SF FLOATING SHAFT COUPLING SIZE 60

Fig. 73 - G35-M60.SF
Floating Shaft Coupling

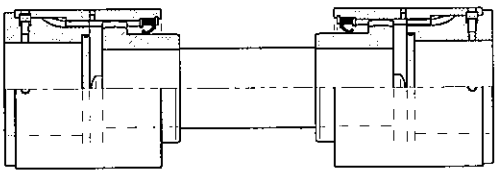

Es. G35-M.SS FLOATING SHAFT COUPLING SIZE 60

Fig. 74 - G35-M60.SS
Floating Shaft Coupling

GTS COUPLINGS

TECHNICAL DATA

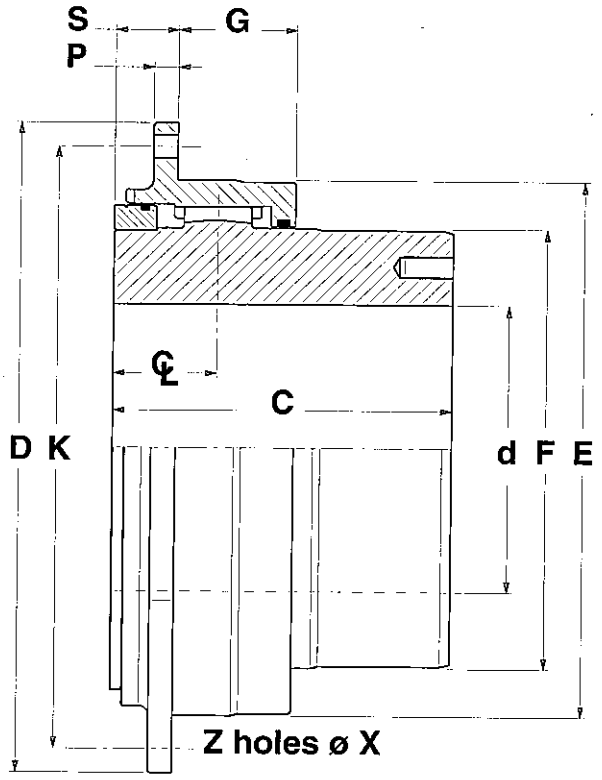

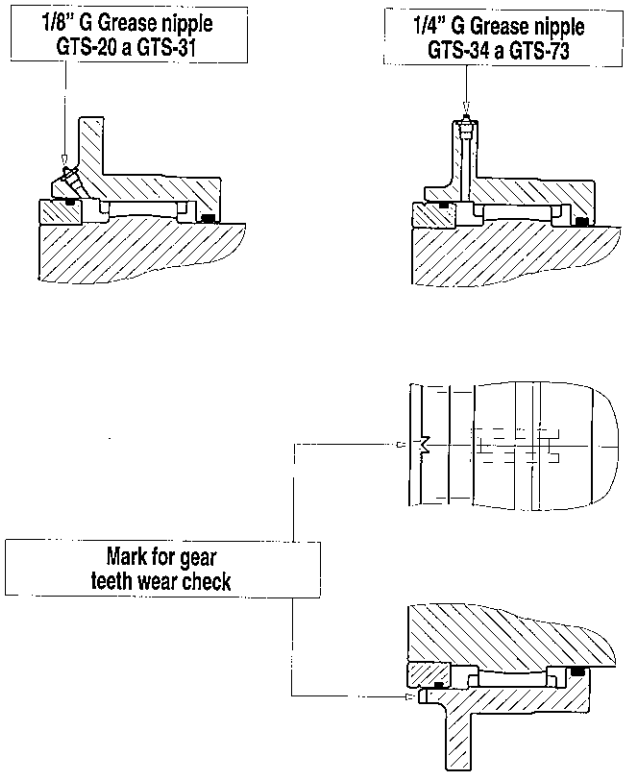

DENOMINATION EXAMPLE:
GTS GEAR COUPLING SIZE 42

GTS-42 Coupling

Fig. 75 - GTS Coupling

TAB. 60

SIZE	NOMINAL TORQUE [kNm] Tk	MAX TORQUE [kNm] Tf	MAX LOAD [Kg] Qk	MAX [mm] d	DIMENSIONS [mm] D	K	Z	X	Y	S	P	G	℄	C	F	f8-H7 E	h9-F8 H	min M	min N	MASS ① M [Kg]	GREASE QUANTITY [Kg]
20	21.5	32.3	3600	100	320	280	6	18	M16	45	15	47	53	110	149	200	280	10	25	28	0.15
22	26.7	40.1	4050	110	340	300	6	18	M16	45	15	54	55	125	165	220	300	10	25	36	0.17
24	32.5	48.8	4500	120	360	320	6	18	M16	45	15	54	55	130	184	240	320	10	25	44	0.18
26	44.5	66.8	5500	130	380	340	6	18	M16	45	15	58	57	145	196	260	340	10	25	53	0.20
28	58.5	87.8	6750	150	400	360	6	18	M16	45	15	65	62	170	222	280	360	10	25	73	0.26
31	79.0	119	8300	165	420	380	6	18	M16	45	15	67	62	175	253	310	380	10	25	96	0.28
34	93.0	140	11300	175	450	400	6	23	M20	60	20	73	77	185	266	340	400	10	25	120	0.32
40	139	209	14600	210	510	460	6	23	M20	60	20	75	77	220	317	400	460	10	25	158	0.48
42	158	237	16000	220	550	500	6	23	M20	60	20	82	82	240	330	420	500	10	25	223	0.58
45	196	294	18200	245	580	530	8	23	M20	60	20	92	87	260	368	450	530	20	40	284	0.70
53	305	458	22500	290	650	600	8	23	M20	65	25	107	97	315	435	530	580	25	50	466	1.10
56	362	543	25400	305	680	630	24	23	M20	65	25	122	107	350	460	560	600	25	50	574	1.40
60	450	675	29400	330	710	670	24	28	M24	81	35	125	123	380	500	600	640	35	60	718	1.80
67	568	852	35800	375	780	730	24	28	M24	81	35	127	123	410	560	670	700	35	60	956	2.20
73	685	1028	42000	410	850	800	24	28	M24	81	35	130	123	450	610	730	760	35	60	1230	2.60

NOTE 1 - Values are calculated for solid hubs.

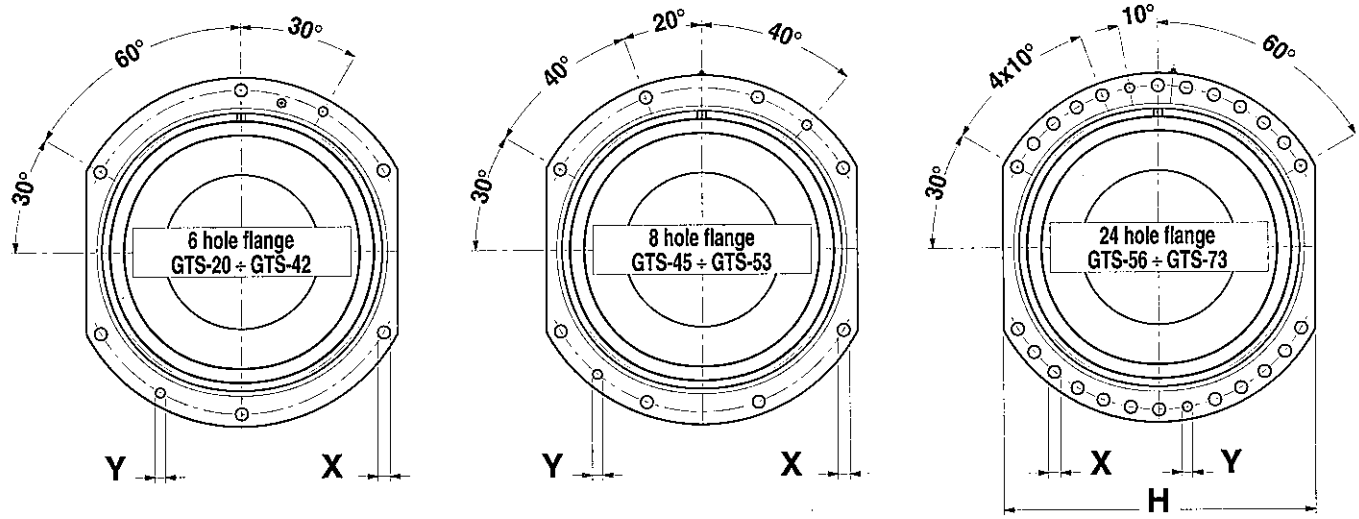

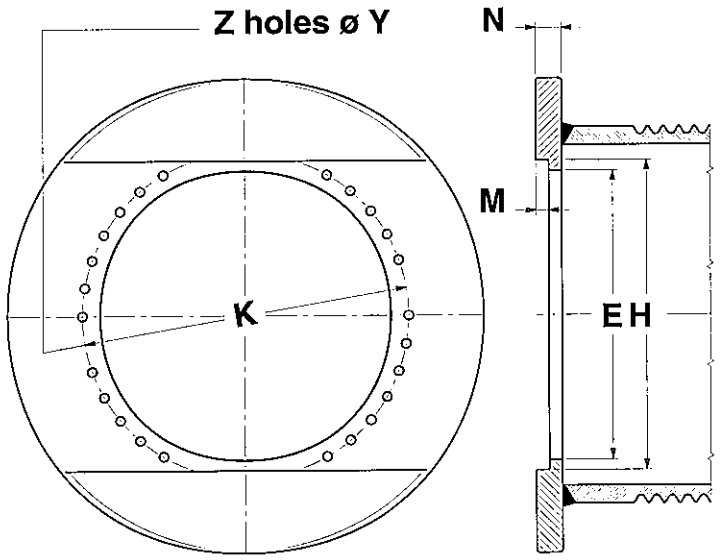

Fig. 76 - Drum Flange

TAB. 61

Max Theoretic Total Working life [h]	400	800	1600	3200	6300	12500	25000	50000
SAFETY CLASS (UNI 7670)	1 mC	1 mB	1 mA	2 m	3 m	4 m	5 m	5 m
SERVICE FACTOR **FS**	1.00	1.12	1.25	1.40	1.60	1.80	2.00	2.50

GEAR COUPLING SELECTION

LOAD DATA:	**Tn**	= MAX TORQUE ON THE DRUM	[kNm]
	Q	= MAX RADIAL LOAD ON THE GEAR COUPLING	[kg]
	D	= SHAFT DIAMETER	[mm]
	FS	= SERVICE FACTOR (TAB. 61)	[-]
VERIFY THAT:	GEAR COUPLING NOMINAL TORQUE	**Tk**	[kNm] ≥ **Tn x FS**
	MAX GEAR COUPLING RADIAL TORQUE	**Qk**	[kg] ≥ **Q**
	MAX GEAR COUPLING BORE	**d**	[mm] ≥ **D**

INSTALLATION, USE & MAINTENANCE

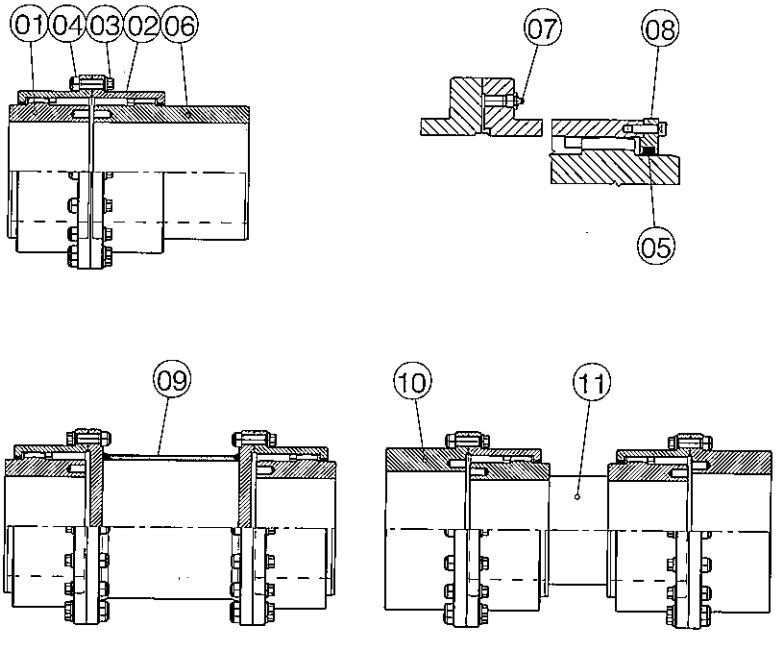

LIST OF COMPONENTS

01	Standard Hub
02	Flanged Sleeve
03	Set Screw
04	Hexagonal Self-locking Nut
05	Seal Gasket
06	Longer Hub
07	Lube Fitting or Lube Plug
08	Removable Side Flange
09	Tubular Spacer
10	Rigid Hub
11	Floating Shaft

THESE INSTRUCTIONS ARE NECESSARY TO ENSURE A LONG LIFETIME OF OUR GEAR COUPLINGS

These general instructions are applicable to all our gear couplings. More specific and detailed instructions are provided with the goods. To perform all the required operations, use the necessary time and check carefully the work done. Please remember that all the mechanical machinings, like bore and keyway finishing and the operations of lifting, handling, assembly, hub shrinkfitting, installation, alignment, lubrication and maintenance, must be performed by qualified, well trained and expert personnel only.

INSTALLATION

1 - Keep the gear couplings in a proper non-corrosive environment, protected from dust, humidity and bad weather. Every 6 months, repeat the anticorrosive protection treatment on the machined surfaces.

2 - Before use, remove the gear coupling from the package and check its condition.

3 - Before installation, disassemble the gear coupling in its main components, remove the anti-corrosive coat from the machined surfaces and clean the bore surfaces carefully. If toxic chemicals are used for the cleaning operations, follow prescribed safety measures. NEVER USE CORROSIVE PRODUCTS.

4 - If the finish bore operations are to be performed, verify that they conform to the dimensional and geometrical tolerances, defined in the specifications and in the drawings (see also AGMA 9002-A26).

5 - When working next to a rotating device, always follow safety procedures: verify that the unit is off and that it can not restart until the work is finished. Carefully check the safety conditions.The personnel must wear proper clothing, which can not get caught on the mechanical components.

6 - In order to facilitate the handling and lifting of the gear couplings and their components, screw the eyebolts in their bores, employing the required tools and operating in the max safety conditions. Before handling and lifting, verify the weights of the units and the position of their barycenter, checking with the catalogue and/or the drawings. During the handling operations, avoid any impact which may damage the machined components. Use procedures and handling and lifting devices which do not damage the gear couplings and their components.

7 - The gear couplings, when operating under load, offer a resistance to the axial slide (translation). An axial force proportional to the transmitted torque contrasts this movement, and its entity is directly related to the primitive diameter of the gear teeth and to the value of the dynamic friction coefficient.

The reaction force is obtained as follows:

$$Fa = Tn \times 2\,\mu / Dp$$

Where:
- Fa = Axial force [KN]
- Tn = Drive Nominal Torque [KNm]
- Dp = Primitive Diameter of the gear teeth [m]
- μ = Friction Coefficient(from 0.01 to 0.15), depending on the lubrication condition. In particular emergency condition the value μ = 0.30 can be taken.

INSTALLATION, USE & MAINTENANCE

8 - A slight interference of approx. the 0.5/1000 of the diameter is recommended for the hub key shrinkfitting operations. The following tolerances are suggested: H7 for the hole and m6-r6 for the shaft. Furthermore, after shrinkfitting, the keys must remain fixed in position on their flanks, using the tolerance P9 for the keyways. For standard keys in standard hubs, with the nominal load condition and heavy, unidirectional duty, it is preferable not to exceed a specific pressure on the flanks of 160 [N/mm²].

9 - For keyless shrinkfittings, interferences from the 1/1000 to the 2.5/1000 of the diameter are employed, using a tolerance of H7 for the hole and s6-x6 for the shaft, or special fits. In this case always contact MAINA engineering staff who, in accordance with the type of shrinkfitting and the technical agreements, will evaluate the torque transmittable at the slipping as well as the stress generated in the hub, according to AGMA 9003-A91.
In case of shrinkfittings with high interference on the flex hubs with working gear teeth, the external diameter of the gear teeth must always be reduced by a suitable dimension. The threaded holes, for fitting the oil pressure removal devices, and the shape of filling holes and grooves are usually performed in accordance with SKF prescriptions. Shrinkfittings can be cylindrical, cylindrical with double diameter, conical, conical with interposed bush. Conical shrinkfittings are suitable for hydraulic assembly.

10 - Uniformly heat the hubs, placing them either in an air furnace or in an oil bath, both with thermostatic control. It is also possible to heat the hubs by a free flame, carefully verifying not to generate overheatings and frequently checking the temperature with suitable and precise devices. Employing the flame, heat the outer side of the hubs, carefully avoiding to direct it on the gear teeth; work in max safety condition, far from flammable materials or substancies.

11 - The heating temperatures must be evaluated considering an expansion which generates a clearance between hole and shaft of the 1÷1.5/1000 of the diameter. The heating temperatures, depending on the shrinkfitting interference, are 110-130°C for key shrinkfittings and 180-250°C for keyless shrinkfittings. Never exceed 320°C.

12 - After the hub heating, wearing suitable thermal insulated clothing, clear the hole seat of the carbon residual, using a proper cleaning paper instead of common rags.After cleaning, measure the entity of the expansions. Afterwards, lubricate holes and hub surfaces with pure mineral oil without additives. In case of shrinkfittings with a friction coefficient $\mu \geq 0.15$, follow our specifications (PFB 1202).

13 - Before shrinkfitting the hub, check that the flanged sleeves or the removable side flanges are correctly positioned on the shafts. Verify the seal integrity of these components and check that the seals are correctly inserted in their seats.

14 - During the shrinkfitting operations, avoid any contact between the hot hub surfaces and the rubber seals. Position the gear sleeves or the side flanges on the hubs only when the hub temperature goes below 60°C.

15 - Position the machines to be connected so that the axial distance between the hubs (or between the heads of the shafts) complies and is in tolerance with the dimension A shown in the catalogue or on the drawings. Obviously, this dimension has to be in accordance with any possible expansion or axial movements/strokes of the connected shafts or to the axial clearance limiting devices. Moreover, to allow the half coupling additional alignment operations, the gear hubs must have the capability to move back as to show a part of the hub; the minimum necessary movement is called "cA" in TAB I. To make both the assembly and alignment operations and the additional gear teeth checks easier, it should be possible to move the gear sleeves back as far as they withdraw from the gear teeth. If there is not enough space, we recommend requesting gear couplings equipped with removable side flanges. To remove the gear couplings without moving the connected units, request couplings equipped with intermediate spacer.

16 - Perform the angular and parallel alignment of the half couplings and of the connected machines. To assure long coupling gear teeth lifetime it is better that, after the machines alignment operation and in dynamic working conditions, the initial residual misalignment between the two half couplings is very close to the 1/1000 of the coupling gear teeth distance $\mathcal{C}$. The max admissible limit is defined for every kind of gear couplings as the max dynamic angle value. This must be always lower than the allowed angle depending on the max working speed (see Kv diagrams).Secure the machines to their foundations and frames, tightening all the locking bolts and nuts. After this operation, check the half coupling alignment again.

17 - Assemble the gear sleeves and the side flanges on the hubs, carefully avoiding any seal damage, then fill the half coupling with grease by a spatula.

18 - Close the gear couplings, assembling all their components and devices. To assure a perfect fitting, spread a slight mastic film on the flanges before closing them. During the assembly operations, respect the mutual position of the components; follow the assembly marks showing the right alignment and orientation of the hubs.

19 - Screw the main flange connection bolts, carefully tightening them at the torques shown in TAB IV. Carefully screw and tighten all the remaining bolts.

20 - For high-speed gear couplings dynamically balanced, in order to maintain the balancing condition with a reduced residual inbalance, besides observing the assembly marks used during the balancing operations, it is also recommended to respect the position of the bolts which, in this case, must not be replaced or mixed.

21 - Complete the lubrication through the grease nipples or the conical plugs. Do not exceed 15÷20 bar of pressure. Verify that the floating part of the gear coupling (gear hubs and spacers) is able to move axially of the dimension H (see TAB 1).

22 - Check the tightening of all bolts and screws, grease nipples and/or plugs.

23 - Before starting the machines, place proper safety protections around the gear coupling.

24 - After the start-up, the foundation settling and a suitable period of working at the max torques, speed and different temperatures (for a period of about 6 months), check the wear, verify and revise, if necessary, the alignment condition.

GEAR COUPLINGS ARE POTENTIALLY DANGEROUS DEVICES, WHEN ROTATING, AND MAY CAUSE INJURY OR DAMAGE THEREFORE THEY MUST BE PROPERLY SHIELDED. SAFETY REGULATIONS PROVIDE THAT THE ROTATING PARTS OF THE MACHINES ARE PROTECTED BY FIXED SHIELDS. AVOID ANY UNINTENTIONAL CONTACT AND PROTECT FROM THE OBJECTS OR LUBRICANT SPATTERING. SHIELDS MUST BE MANUFACTURED BY THE USER, CAREFULLY ACCORDING TO APPLICABLE GOVERNMENT REGULATIONS.

INSTALLATION, USE & MAINTENANCE

A CORRECT ALIGNMENT IS ESSENTIAL FOR A LONG LIFETIME.

The initial static no-load alignment condition (machines off) must consider what will happen under load (dynamic condition). This means that it shall be also able to compensate the misalignments generated by load and temperatures (see pt. 16 of INSTALLATION INSTRUCTIONS).

Check the alignment condition of the half couplings, using for this purpose a modern laser equipment. In this case, to perform the alignment operations, the instructions for use of the equipment have to be followed. Should you not have this equipment, use a thickness gauge or an inside micrometer with extension and a centesimal test indicator (with proper support elements). In this case, depending on the gear coupling type, proceed as indicated below.

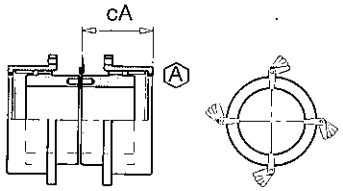

Fig. 01

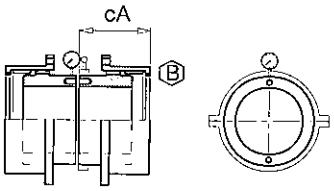

Fig. 02

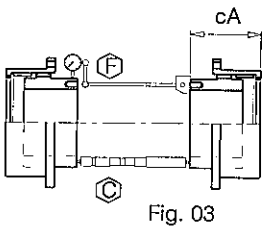

Fig. 03

① - Determine the angular misalignment value processing, in accordance with the tables, the measurements of the head parallelism between the reference frontal surfaces of the two hubs. For this purpose, by inserting the thickness gauge between the heads of the two hubs, perform a first 360° test to identify the position and the min and max entity of the distance between the hubs. After defining the extreme positions, perform a precise measurement of 4 points at 90°, like Ⓐ in FIG 01.
The max difference between two values at 180° is ΔA.
Determine the parallel misalignment value processing, according to the tables, the mutual eccentricity between the reference diameter of the two hubs. For this purpose, rigidly fasten the test indicator on a band in two halfs to the reference diameter of a hub, like Ⓑ in FIG 02.
Verify that the whole unit, during a 360° rotation, does not have any clearance, afterwards measure the min and max eccentricity. The max difference is ΔP.

② - For gear couplings with tubular spacer or with floating shaft, check the head parallelism between the hubs reference surfaces, using an inside micrometer positioned like Ⓒ in FIG 03 or a comparator positioned like Ⓓ in FIG 04 or Ⓔ in FIG 05. The max difference between two values at 180° is ΔA. The hub eccentricity is measured by a comparator, positioned like Ⓕ in FIG 03, Ⓖ in FIG 04 or Ⓗ in FIG 05. The max difference is ΔP.
Gear couplings with spacer, having a long distance between the gear teeth, require an aligment accuracy lower than the normal gear couplings do.

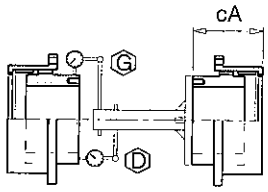

Fig. 04

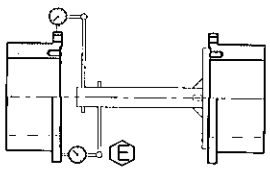

Fig. 05

According to the parallelism and coaxiality values, ΔA and ΔP verify the alignment as follows.

See TAB. I for the values of: distance between the gear mesh ℄, hub diameter F, alignment lenght cA and hub axial slide H

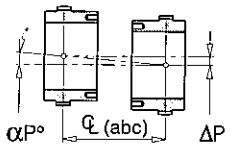

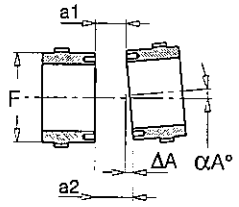

$\Delta A = a2 - a1$

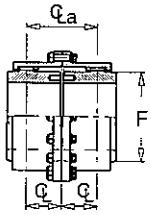

℄ a = 2 ℄
$\alpha P° = \text{arc tg } (\frac{\Delta P}{℄ a})$
$\alpha A° = \text{arc tg } (\frac{\Delta A}{F})$

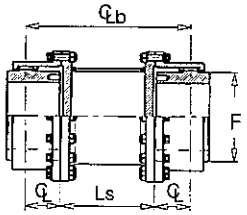

℄ b = Ls + 2 ℄
$\alpha P° = \text{arc tg } (\frac{\Delta P}{℄ b})$
$\alpha A° = \text{arc tg } (\frac{\Delta A}{F})$

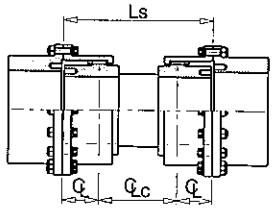

℄ c = Ls - 2 ℄
$\alpha P° = \text{arc tg } (\frac{\Delta P}{℄ c})$
$\alpha A° = \text{arc tg } (\frac{\Delta A}{F})$

$\alpha T° = \text{arc tg } \sqrt{(\text{tg } \alpha A)^2 + (\text{tg } \alpha P)^2}$

$\alpha T° \leq \alpha D°$ (Max Dynamic Angle)

αD° = 0°10' - Standard **GO-A** Couplings
αD° = 0°15' - **GO-A** Coupling with N.O.
αD° = 0°15' - **GO-B** & **GO-B.HT** Coupling
αD° = 0°30' - **G20** Coupling

INSTALLATION, USE & MAINTENANCE

TAB. I

ALIGNMENT DIMENSIONS

GO-A SIZE	℄	F	cA	H
0	24	69	55	1.5 ± 0.5
1	29	85	62	1.5 ± 0.5
2	30	107	74	1.5 ± 0.5
3	44	133	86	2.5 ± 0.5
4	57	152	100	2.5 ± 0.5
5	66	178	115	3 ± 0.5
6	76	209	130	3 ± 0.5
7	86	234	145	4 ± 0.5
8	100	254	160	4 ± 0.5
9	114	279	175	4 ± 0.5
10	124	305	190	4 ± 0.5
11	146	355	220	5 ± 0.5

GO-B SIZE	GO-B ℄	F	cA	H	AO-B ℄
4	155	400	251	9 ± 1	63
5	175	450	275	9 ± 1	67
6	190	490	292	9 ± 1	69
7	205	550	310	9 ± 1	72
8	215	610	322	9 ± 1	74
9	230	650	345	15 ± 1.5	80
10	240	680	357	15 ± 1.5	82
11	255	750	376	15 ± 1.5	86
12	270	790	415	22 ± 2	93
13	295	870	444	22 ± 2	97
14	335	1000	490	22 ± 2	103
15	370	1100	537	30 ± 3	112
16	410	1220	598	30 ± 3	118
17	440	1310	632	30 ± 3	122
18	470	1400	665	30 ± 3	125
19	510	1520	710	30 ± 3	130

G20 SIZE	℄	F	cA	H
12	54	105	108	6 ± 1
14	65	128	121	6 ± 1
17	75	152	133	6 ± 1
19	83	170	146	9 ± 1
23	96	206	162	9 ± 1
26	108	242	177	9 ± 1
30	122	274	207	12 ± 1
35	137	322	226	12 ± 1
40	152	370	255	12 ± 1
46	170	420	280	15 ± 1.5
52	187	480	301	15 ± 1.5
58	203	540	321	15 ± 1.5

A CORRECT LUBRICATION IS ESSENTIAL FOR A LONG GEAR COUPLING LIFETIME

1 - After the hub shrinkfitting and the positioning of the gear sleeves and side flanges, fill with grease all the spaces between hubs and sleeves using a spatula. After closing the gear coupling, spread a slight mastic film on the flange connection surfaces.

2 - Tighten all the screws at the required torques (see TAB IV) then complete lubrication using all the grease nipples and/or plugs (2 for each half coupling).

3 - When lubricating through the grease nipples, verify that the grease is really filling the gear coupling; should the grease enter the coupling with difficulty, open a breather by removing a plug or a grease nipple.

4 - At the end of the lubrication, check that the gear coupling is completely filled with grease, then insert the plugs and/or the grease nipples checking their tightening.

5 - Regularly, every 3-4 months, relubricate the gear couplings. We suggest this initial time interval in case of integral seals, industrial applications, non corrosive environment, medium and heavy duty, room temperatures from 0 to 70°C. After the first working and observation year and after checking the results, time intervals can be extended up to 6 months. For different conditions, the time intervals between lubrications can still be extended, but they must never be longer than 12 months.
When lubricating, totally replace grease. To let all the old grease out, remove a plug or a grease nipple at 180° from the new grease filling point and pump the new grease until this comes out from the breather. At the and of this operation, insert the plugs and/or grease nipples, checking that they are properly tightened.

6 - Always check that the floating part is axially free. If no movement is possible, open the gear coupling and check the gear teeth.

7 - Every 8000 working hours or at max every two years, completely replace the grease. When doing this operation, you must open the gear coupling, clean the flange surfaces, remove the old grease, clean the interstices, check the gear teeth condition and then perform the operations shown in steps 1 to 4. Never use contaminated grease, or grease which is not suitable to the working conditions.

To separate the two flanges of the gear hubs never use tools which may damage the integrity of the seal surfaces.

To lubricate the gear couplings and their gear teeth, you must employ lithium soap greases, with EP additives, centrifugation resistant, non hygroscopic and antioxidant, with minimum features comparable to what shown in TAB II. Further details are contained in AGMA 9001-A86 instructions.

For all the conditions below, select the proper grease directly contacting the lubricant producer and submit the choosen grease features to MAINA Technical Department for acceptance.

- Extreme duty condition
- Very heavy and/or reversible duty
- Extreme rotation speed
- Extreme working temperature
- High humidity environment
- "LONG-LIFE" lubrication

For information only, TAB III shows some brands and names of grease suitable to lubricate gear couplings operating in condition of medium speeds, loads and duties, and temperatures from -20 to +70°C.

TAB. II

LUBRICANT FEATURES

Working Temperature	ASTM Penetration Index	NLGI Grade
≥ –20°C ≤30°C	350 ÷380	0
≥ 30°C ≤70°C	300 ÷350	1
≤ –20°C	Please contact	
≥ 70°C	our technical department	

TAB. III

RECOMMENDED LUBRICANTS

AGIP	GR-MU EP	**IP**	ATHESIA EP
CHEVRON	DURA-LIGHT EP	**MOBIL**	MOBILTEMP 78
MONTESHELL	ALVANIA EP	**ESSO**	BEACON EP

NEVER MIX DIFFERENT KINDS AND/OR DIFFERENT BRANDS OF GREASE. THEY MAY BE INCOMPATIBLE AND MAY LOSE THE LUBRICATION FEATURES. UNLESS OTHERWISE INSTRUCTED, NEVER USE OIL TO LUBRICATE GEAR COUPLINGS.

INSTALLATION, USE & MAINTENANCE

TAB. IV

SEAL GASKETS & TIGHTENING TORQUES

GO-A SIZE	Seals OR. TN414	Tightening Torque (Nm)
0	OR 68	18
1	OR 85	36
2	OR 107	36
3	OR 133	65
4	OR 152	65
5	OR 177	150
6	OR 209	150
7	OR 234	150
8	OR 253	220
9	OR 279	400
10	OR 304	400
11	OR 355	520

GO-A.HT SIZE	Seals GDL. TN559	Tightening Torque (Nm)
3	12.136	38
4	12.160	38
5	12.200	38
6	12.220	65
7	12.254	65
8	12.278	155
9	20.314	155
10	20.346	155
11	20.378	520

GO-B SIZE	Seals GDL. TN559	Tightening Torque (Nm)
4	20.440	670
5	20.490	670
6	20.530	1250
7	20.590	1250
8	20.650	1250
9	20.690	2170
10	20.720	2170
11	20.790	2170
12	30.850	3480
13	30.930	3480
14	30.1060	5230
15	30.1160	5230
16	40.1300	5230
17	40.1390	8300
18	40.1480	8300
19	40.1600	8300

G20 SIZE	Seals GDL. TN559	Tightening Torque (Nm)
12	12.129	38
14	12.152	38
17	12.176	38
19	12.194	65
23	12.230	65
26	12.266	155
30	20.314	155
35	20.362	155
40	20.410	520
46	20.460	520
52	20.520	520
58	20.580	520

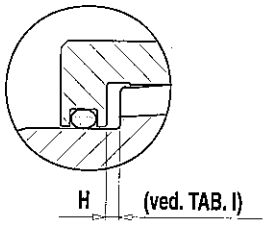

OR seal type TN414

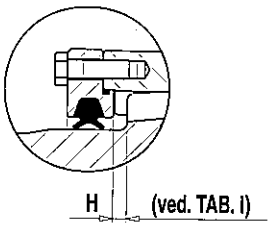

GDL seal type TN559

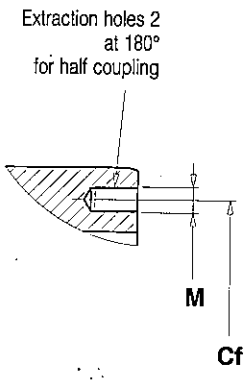

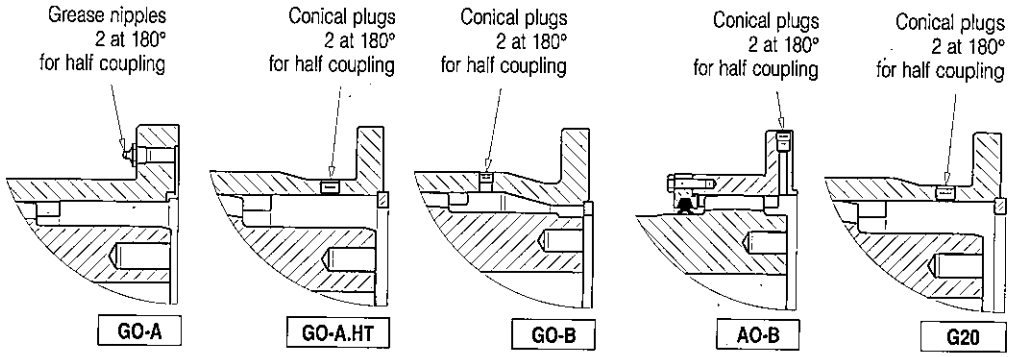

TAB. V

EXTRACTION HOLES, 2 AT 180° FOR HALF COUPLING

GO-A SIZE	Holes M	Dia. Cf
* 0	M5	61
* 1	M6	73
* 2	M8	91
* 3	M10	115
* 4	M12	132
* 5	M12	154
6	M16	180
7	M16	204
8	M20	220
9	M20	240
10	M24	268
11	M24	316

* Only on demand

GO-A.HT SIZE	Holes M	Dia. Cf
3	M10	98
4	M10	118
5	M10	154
6	M12	170
7	M12	200
8	M16	220
9	M16	237
10	M16	266
11	M24	294

GO-B SIZE	Holes M	Dia. Cf
4	M24	350
5	M24	400
6	M30	430
7	M30	490
8	M30	550
9	M36	580
10	M36	600
11	M36	670
12	M42	710
13	M42	790
14	M48	900
15	M48	1000
16	M48	1120
17	M56	1190
18	M56	1280
19	M56	1400

G20 SIZE	Holes M	Dia. Cf
12	M10	90
14	M10	110
17	M10	130
19	M12	145
23	M12	175
26	M16	205
30	M16	235
35	M16	280
40	M24	320
46	M24	360
52	M24	410
58	M24	460

BORE DESIGNS



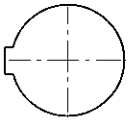

F01
Cylindrical Bore,
1 Keyway

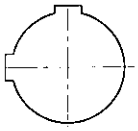

F02
Cylindrical Bore,
2 Keyways at 90°

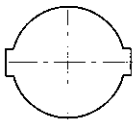

F03
Cylindrical Bore,
2 Keyways at 180°

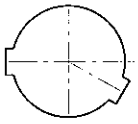

F04
Cylindrical Bore,
2 Keyways at 120°

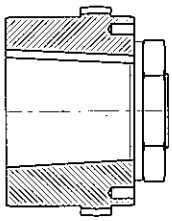

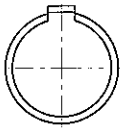

F05
Tapered Bore,
1 tapered Keyway

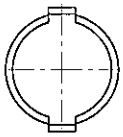

F06
Tapered Bore,
2 tapered Keyways at 180°

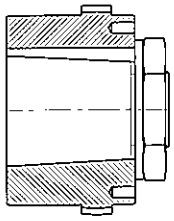

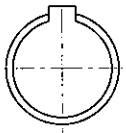

F07
Tapered Bore,
1 straight Keyway

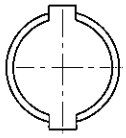

F08
Tapered Bore,
2 straight Keyways at 180°

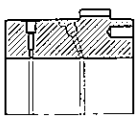

F09
Cylindrical bore for keyless fitting and oil pressure removal

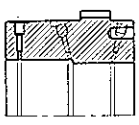

F10
Cylindrical bore with 2 diameter, for keyless fitting and oil pressure removal

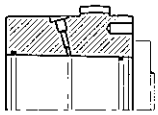

F11
Tapered bore for fitting and oil pressure removal

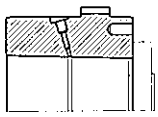

F12
Tapered bore for keyless fitting and oil pressure removal

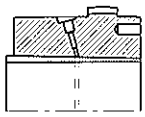

F13
Tapered bore with tapered bush for fitting and oil pressure removal

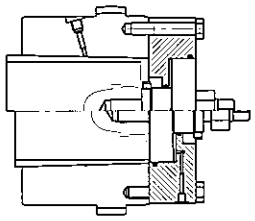

F14
Hydraulic device for fitting and oil pressure removal

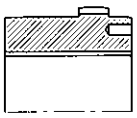

F15
DIN 5480 splined bore without centerings

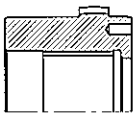

F16
DIN 5480 splined bore without centerings diameters

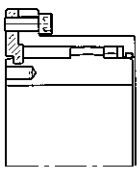

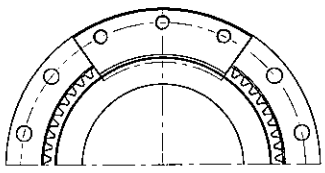

F17
Rotating hub centering device with disconnected machines

SPECIAL DESIGNS

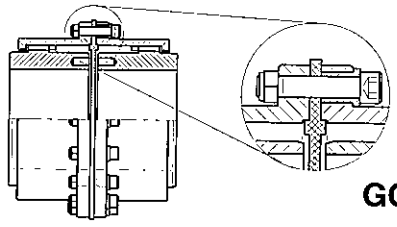

GO-A.IE Couplings
insulated couplings

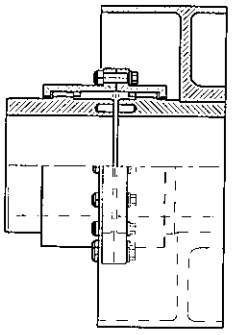

GO-A.FFX Couplings
with brake pulley or brake disc

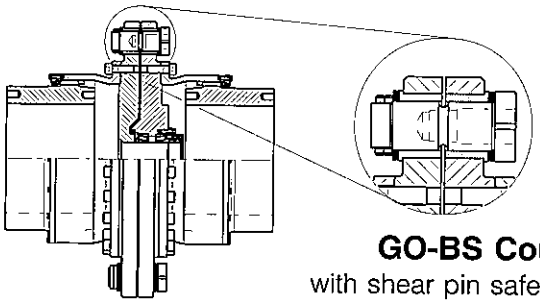

GO-BS Couplings
with shear pin safety device

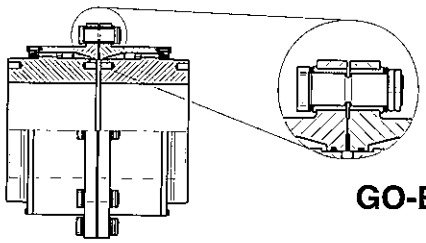

GO-BPR Couplings
with breaking pins

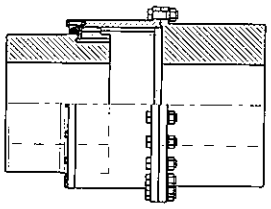

GO-BSC Couplings
for axial slide

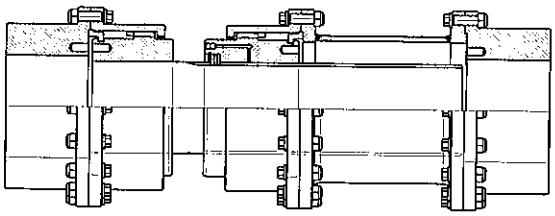

AO-FASC.X Spacer Couplings
telescopic for high axial slide

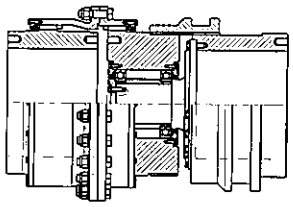

GO-BH.RO Couplings
disengageable with idle part running on bearings

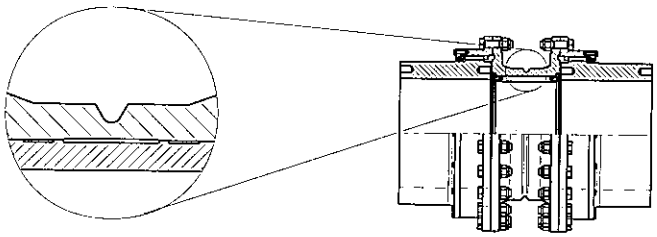

GO-B.BS Couplings
with breaking spacer

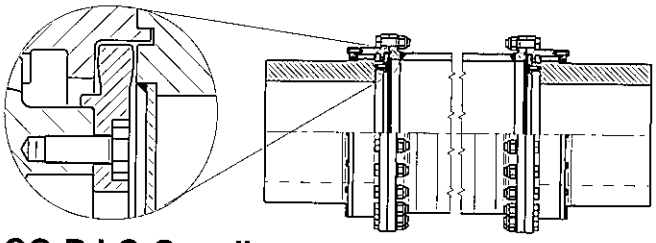

GO-B.LG Couplings
with spacer and limited end float

MAINA S.p.A. reserves the right to change, without any notice, the technical indications contained in this catalogue. Every reproduction, even partial, of this catalogue, violating the copyright, will be legally prosecuted.

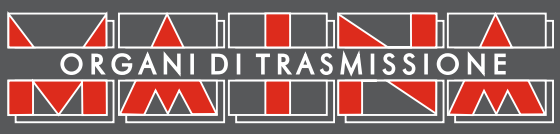

HEAD OFFICE: MAINA ORGANI DI TRASMISSIONE S.p.A. - CORSO ALESSANDRIA 160 - 14100 ASTI
PHONE: +39.0141.492811 - FAX +39.0141.492860 - E-mail: info@maina.it - www.maina.it