MAKING MODERN LIVING POSSIBLE

Technical Information

Orbital Motors

General

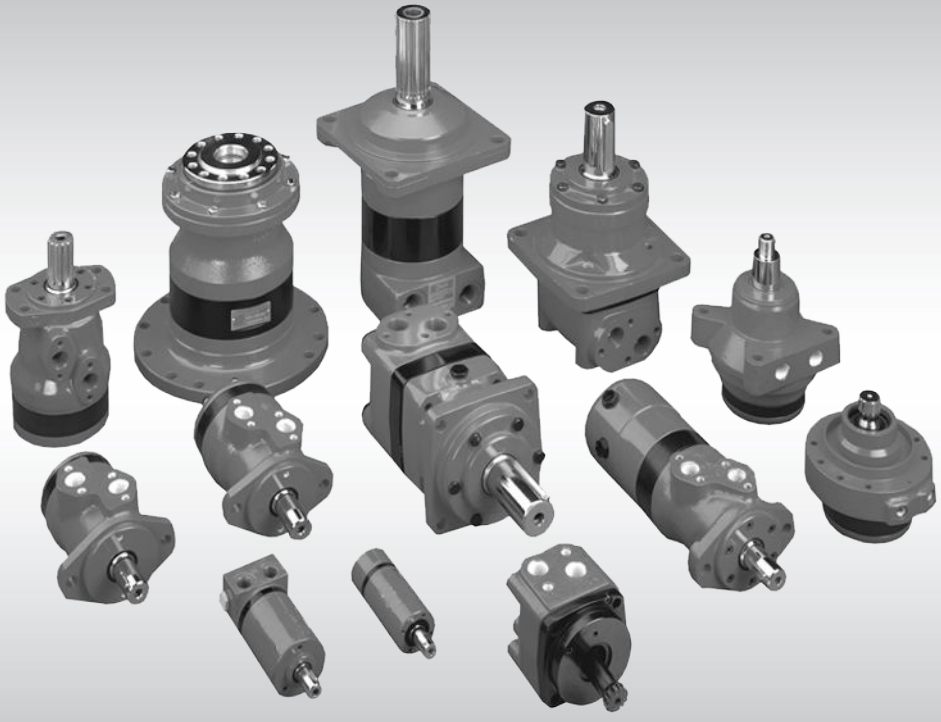

powersolutions.danfoss.com

Revision history

Table of revisions

Date	Changed	Rev
November 2014	Converted to Danfoss layout - DITA CMS	CA
Jun 2005		BA

Contents

A wide range of Orbital Motors

Characteristic, features and application areas of Orbital Motors....5
Characteristic features of Danfoss Orbital Motors....5
Technical features of Danfoss Orbital Motor....5
The Danfoss Orbital Motors are used in the following application areas:....6
Survey of literature with technical data on Danfoss Orbital Motors....6

Conversion Factors

Orbital Motors, General

Operating Principle....8
Gearwheel set....8
Distributor valve....8
Spool valve....8
Disc valve with valve drive....9
Disc valve on the output shaft....9

Selection of Motor Type

OML, OMM, OMP, OMPW, DH....10
OMPW N....10
OMR, OMH, DS....11
OMRW N....11
OMEW....11
OMS, OMT, OMV....11
TMT....11
Features of main types....11
OML, OMM, OMP, OMPW, DH....11
OMPW N....11
OMR, OMH, DS....11
OMRW N....12
OMEW....12
OMS, OMT, OMV....12
TMT....12
Motor Variants....12
Motors with corrosion resistant parts....12
OMP/OMR with dust seal cap....12
Wheel motor....13
OMP/OMR with needle bearing....13
Super low leakage motor....13
Short motors....14
Ultrashort motor....14
Motors with integrated positive holding brake....14
Motors with integrated negative holding brake....14
Motors with integrated flushing valve....15
Motors with tacho connection....16
Motors with speed sensor....16
OMT N motor....16

Selection of Motor Size

Build-up of the Function Diagram....17
Continuous operation/intermittent operation/peak load....17
Efficiency....18
Volumetric efficiency....18
Example....18
Hydraulic mechanical efficiency....19
Example:....19
Total efficiency....20
Use of the Function Diagram....20
Minimum Speed....21

Bearing Dimensioning

Contents

Shaft load and bearing life time ... 22
Relationship between Bearing Life Time and Speed ... 22
Relationship between Shaft Load and Bearing Life Time ... 23
Relationship between permissible shaft load and speed ... 23
Maximum Radial Shaft Load ... 23

Hydraulic Systems

Max. Pressure on the Shaft Seal ... 24
- Standard shaft seal (NBR) ... 24
- High-pressure shaft seal (NBR) ... 24
- Viton shaft seal (FPM) ... 24
- Characteristics of sealing materials ... 24
  - Motors with check valve ... 24
  - Motors with drain line ... 24
  - Motors without check valve and drain line ... 25
- OMEW ... 25
  - OMEW with high pressure shaft seal ... 25
  - CCW version (counter clockwise rotation) ... 25
  - Short/ultra-short motors ... 25

Drain Line ... 26
- Application ... 26
- Oil flow in the drain line ... 26

Braking ... 26
- Braking torque ... 26
- Opening pressure for the dual shock valve ... 27
- Replenishment ... 27
- Seeping ... 29

Brake Motors ... 29
- OMS B ... 30
- OMR F, OMT FX, OMT FL and TMT FL ... 30
- OMR F and OMT FH ... 30

Installation, Starting Up, Maintenance and Oil Types ... 31
- Design in brief ... 31
- Combination in brief ... 31
- Starting up and running in the hydraulic system ... 31
- Signs of air in the hydraulic system ... 32
- If there is air in the system ... 32
- During operation ... 32
- Maintenance ... 32
- Oil Types ... 32
  - Mineral oils ... 32
  - Non-flammable or biodegradable fluids ... 32

Temperature, Viscosity and Filtering ... 33
- Temperature ... 33
- Viscosity ... 33
- Filtering ... 34

A wide range of Orbital Motors

Characteristic, features and application areas of Orbital Motors

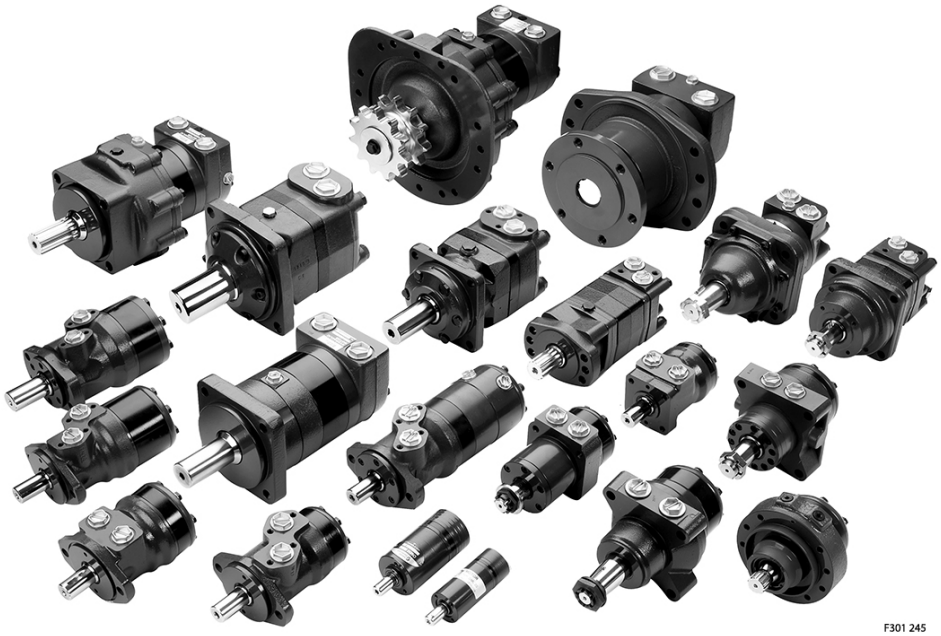

Danfoss is a world leader within production of low speed orbital motors with high torque. We can offer more than 3,000 different orbital motors, categorised in types, variants and sizes (including different shaft versions).

The motors vary in size (rated displacement) from 8 cm^3 [0.50 in^3] to 800 cm^3 [48.9 in^3] per revolution.

Speeds range up to approximate 2,500 min^{-1} (rpm) for the smallest type and up to approximate 600 min^{-1} (rpm) for the largest type.

Maximum operating torques vary from 13 N•m [115 lbf•in] to 2,700 N•m [24,000 lbf•in] (peak) and maximum outputs are from 2.0 kW [2.7 hp] to 70 kW [95 hp].

Characteristic features of Danfoss Orbital Motors

- Smooth running over the entire speed range
- Constant operating torque over a wide speed range
- High starting torque
- High return pressure without the use of drain line (High pressure shaft seal)
- High efficiency
- Long life under extreme operating conditions
- Robust and compact design
- High radial and axial bearing capacity
- For applications in both open and closed loop hydraulic systems
- Suitable for a wide variety of hydraulics fluids

Technical features of Danfoss Orbital Motor

The programme is characterised by technical features appealing to a large number of applications and a part of the programme is characterised by motors that can be adapted to a given application. Adaptions comprise the following variants among others:

A wide range of Orbital Motors

- Motors with corrosion resistant parts
- Wheel motors with recessed mounting flange
- OMP, OMR- motors with needle bearing
- OMR motor in low leakage version
- OMR motors in a super low leakage version
- Short motors without bearings
- Ultra short motors
- Motors with integrated positive holding brake
- Motors with integrated negative holding brake
- Motors with integrated flushing valve
- Motors with speed sensor
- Motors with tacho connection
- All motors are available with black finish paint

The Danfoss Orbital Motors are used in the following application areas:

- Construction equipment
- Agricultural equipment
- Material handling & Lifting equipment
- Forestry equipment
- Lawn and turf equipment
- Special purpose
- Machine tools and stationary equipment
- Marine equipment

Survey of literature with technical data on Danfoss Orbital Motors

Detailed data on all Danfoss Orbital Motors can be found in our motor catalogue, which is divided into more individual subcatalogues:

- General information on Danfoss Orbital Motors: function, use, selection of orbital motor, hydraulic systems, etc.
- Technical data on small motors: OML and OMM
- Technical data on medium sized motors: OMP, OMR, OMH
- Technical data on medium sized motors: DH and DS
- Technical data on medium sized motors: OMEW
- Technical data on medium sized motors: VMP
- Technical data on medium sized motors: VMR
- Technical data on large motors: OMS, OMT and OMV
- Technical data on large motors: TMT
- Technical data on large motors: TMV

A general survey brochure on Danfoss Orbital Motors gives a quick motor reference based on power, torque, speed and capabilities.

Conversion Factors

1 Nm = [8.851 lbf.in]

1 cm^3 = [0.061 in3]

1 N = [0.2248 lbf]

1 l = [0.22 UK gal]

1 bar = [14.50 psi]

1 l = [0.264 US gal]

1 mm = [0.0394 in]

°F = [1.8 °C + 32]

Orbital Motors, General

Operating Principle

Orbital motors convert hydraulic energy (pressure, oil flow) into mechanical energy (torque and speed).

Danfoss orbital motors are of fixed displacement high-torque design. For a given oil flow and given pressure the displacement (size of motor) determines the speed and torque. For a given displacement (size of motor) the speed is determined by the oil flow rate and the torque is determined by the pressure differential.

Gearwheel set

The operating principle of the motors is based on an internal gear design, consisting of a fixed external gear reaching against an internal gear through which the output torque and speed are transmitted. There are two forms of external gear: the OML, OMM, OMP and DH have plain teeth, whereas the OMR, DS, OMH, OMEW, OMS, OMT, OMV and TMT have teeth fitted with rollers.

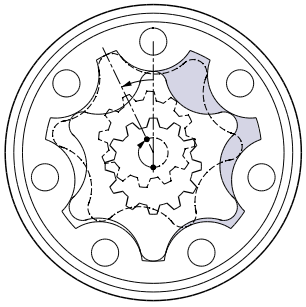

151-1028.10

Distributor valve

The distributor valve is driven synchronously by the internal gear through a cardan shaft ensuring that the individual chambers of the motor are filled and emptied precisely - without losses. There are two forms of distributor valve:

Spool valve

OML, OMM, OMP, OMR, DH, DS and OMH motors have a spool valve: the distributor valve has been integrated with the output shaft. The cardan shaft must therefore rotate the distributor valve as well as transfer mechanical energy from the gear-wheel set to the output shaft.

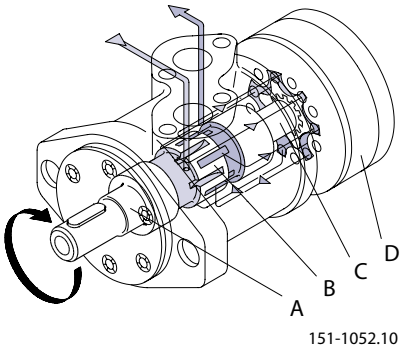

151-1052.10

A: Output shaft C: Cardan shaft

B: Spool valve D: Gearwheel set

Orbital Motors, General

Disc valve with valve drive

OMS, OMT, OMV and TMT motors have a disc valve: The distributor valve has been separated from the output shaft and it is driven by a short cardan shaft [valve drive]. A balance plate counterbal-ances the hydraulic forces around the distributor valve.

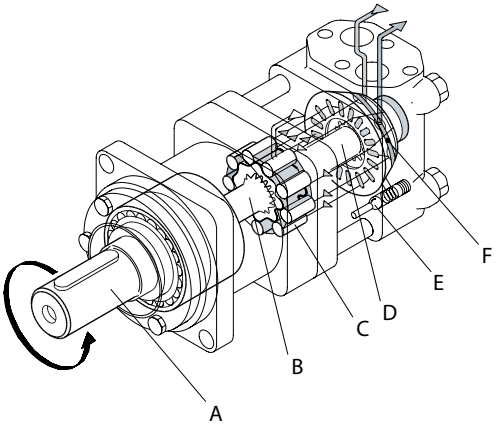

151-1053.10

A: Output shaft D: Valve drive

B: Cardan shaft E: Check valve

C: Gearwheel set F: Disc valve

Disc valve on the output shaft

OMEW motors have a disc valvemounted on the output shaft. The cardan shaft rotates the disc valve and transfers mechanical energy from the gearwheel to the output shaft. The hydraulic forces are equalised by the balance plate.

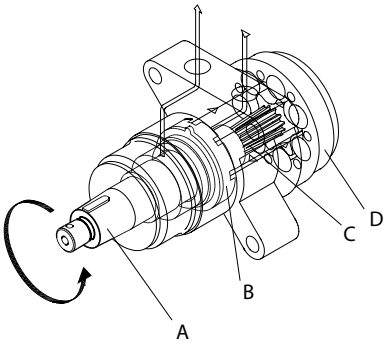

151-1808.10

A: Output shaft C: Cardan shaft

B: Disc valve D: Gearwheel set

Selection of Motor Type

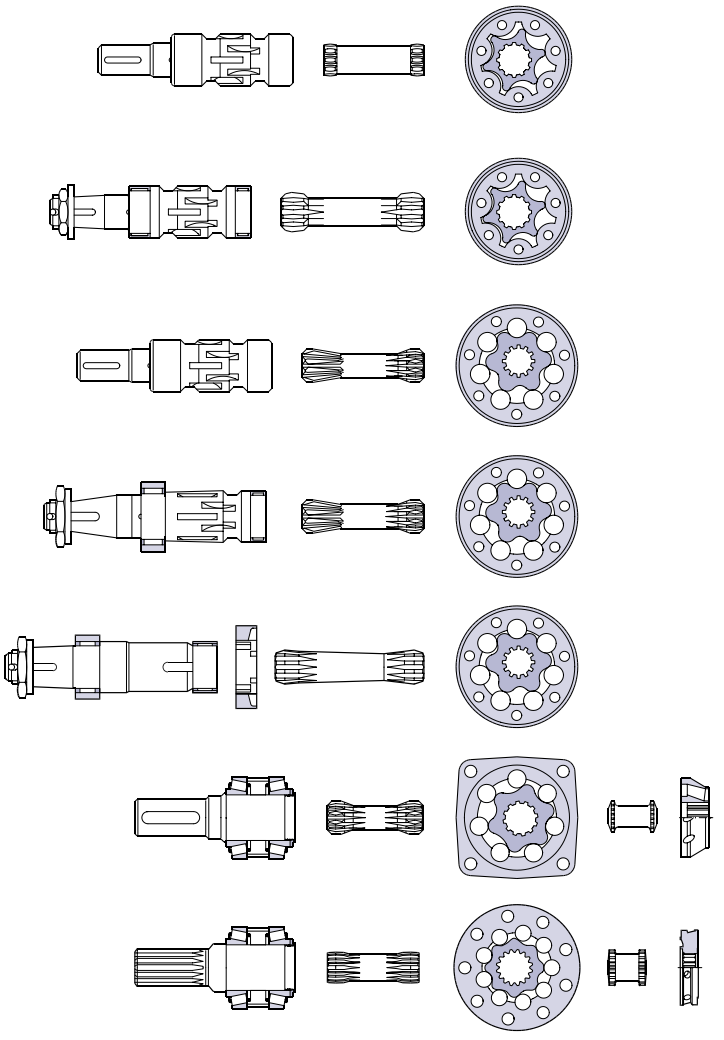

151-1374.10

OML, OMM, OMP, OMPW, DH

- Rollerless gear rim
- Spool valve integrated with output shaft
- Output shaft supported in slide bearings

OMPW N

- Rollerless gear rim
- Spool valve integrated with output shaft
- Output shaft supported in needle bearings

Selection of Motor Type

OMR, OMH, DS

- Gear rim with rollers
- Spool valve integrated with output shaft
- Output shaft supported in slide bearings

OMRW N

- Gear rim with rollers
- Spool valve integrated with output shaft
- Output shaft supported in needle bearings

OMEW

- Gear rim with rollers
- Disc valve on output shaft
- Output shaft supported in needle bearings

OMS, OMT, OMV

- Gear rim with rollers
- Disc valve with separate valve drive
- Output shaft supported in tapered roller bearings

TMT

- Gear rim with rollers
- Disc valve with separate valve drive
- Output shaft supported in tapered roller bearings

Features of main types

OML, OMM, OMP, OMPW, DH

Compact design. The rollerless gear rim makes these types suitable for long operating periods at moderate pressures, or short operating periods at high pressures.

OMPW N

Compact motor suitable for long operating periods at moderate pressures or short operating periods at high pressures. The needle bearings on the output shaft make OMPW N suitable for applications with static and dynamic radial loads.

OMR, OMH, DS

The rollers in the gear rim reduce local stress, spread the tooth load over their projected area and reduce the tangential reaction forces on the inner gear reducing friction to a minimum. This gives long operating life and better efficiency even at continuous high pressures. Gearwheel sets with rollers are recommended for operation with thin oil and for applications having continually reversing loads.

Selection of Motor Type

OMRW N

Because of the rollers in the gear rim OMRW N is suitable for continuous operation under demanding operating conditions: e.g. high pressures, thin oil, or frequent reversals. The needle bearings of the output shaft make OMRW N suitable for absorbing static and dynamic radial loads.

OMEW

OMEW motors have a disc valve mounted on the output shaft, i.e. hydraulic and mechanical losses are reduced to a minimum and the gearwheel set is fitted with rollers. OMEW is therefore ideal for continuous operation in demanding conditions. The output shaft runs in needle bearings capable of absorbing static and dynamic radial loads. OMEW motors are fitted with a high-pressure seal; therefore the drain line can be omitted.

OMS, OMT, OMV

OMS, OMT, and OMV are suitable for continuous operation under rough operating conditions: e.g. high pressures, thin oil, or frequent reversals. The tapered roller bearings make the motors suitable for absorbing static and dynamic radial loads. Besides the separately driven and hydraulically balanced disc valve, hydraulic and mechanical losses are reduced to a minimum. This gives the motors high efficiency - even at high pressures, and good starting characteristics.

TMT

The marked for hydraulic motors has developed generally increasing expectations of the motor performance, and espacially of a higher pressure level. On some applications the present motor program no longer fulfils the marked demand. The TMT motors comply with these expectations providing the same good characteristics as the OMS, OMT and OMV motors.

If the application requires very smooth running at low speeds the choice of OMS, OMT, OMV or TMT is recommended.

Motor Variants

Motors with corrosion resistant parts

OMP and OMR motors are available in a version with corrosion resistant parts: OMP C and OMR C. The corrosion resistant parts are: output shaft (1), key (2), front cover (3), and front cover screws (4). The dust seal (5) is of nitrile rubber with stainless steel cap.

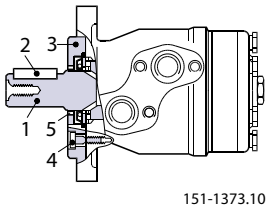

151-1373.10

OMP/OMR with dust seal cap

OMP and OMR motors are also available with a dust seal cap. These motors are particularly suitable for sweepers, etc. where resistance to high dust concentrations is a requirement.

Selection of Motor Type

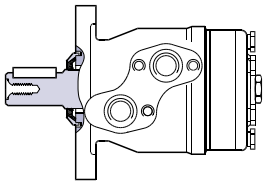

151-1893.10

Wheel motor

OMP, OMR, OMS, OMT and OMV motors are available in wheel motor versions. The recessed mounting flange makes it possible to fit a wheel hub or a winch drum so that the radial load acts midway between the two motor bearings. This gives the best utilisation of the bearing capacity and is a very compact solution. Type designations of wheel motors are OMPW, OMPW N, OMRW N, OMEW, OMSW, OMTW, and OMVW.

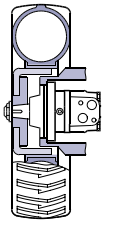

151-887.10

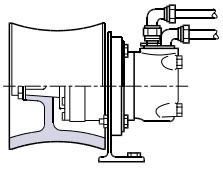

151-1056.10

OMP/OMR with needle bearing

For applications that want to use the OMP/OMR but must also consider other operating conditions such as high static radial load, frequent starts/stops and vibration on the shaft, we can offer OMP/OMR with an output shaft running in needle bearings.

Type designation: OMP N, OMR N.

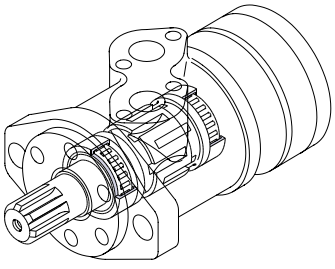

151-1464.10

Super low leakage motor

The OMR motor is available in a special version that keeps spool valve and output shaft apart and supports the output shaft in needle bearings. This motor is particularly suitable for applications with demands for exceptionally low leakage.

Type designation: OMR NA.

Selection of Motor Type

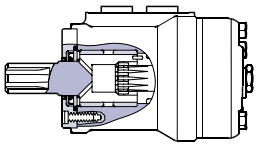

151-1624.10

Short motors

OMS, OMT and OMV motors are available in short versions. It can be an advantage to use a short motor for gears that already have the capacity to absorb radial and axial forces.

Type designations are OMSS, OMTS and OMVS.

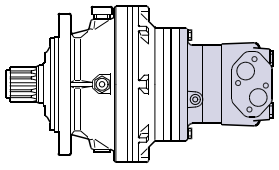

151-977.10

Ultrashort motor

OMS, OMT, OMV and TMT are available with ultrashort installation dimensions, i.e. without bearings and output shaft. The ultrashort design allows an opti-mised integration of the motor in the counterpart. Special installation conditions please contact the Danfoss Sales Organisation.

Type designations: OMSU, OMTU, OMVU and TMTU.

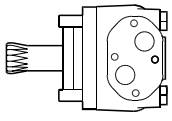

151-1691.10

Motors with integrated positive holding brake

OMS is available in a version with integral holding brake. This is a drum brake activated mechanically (positive brake). Type designation for OMS with integral holding brake is OMS B.

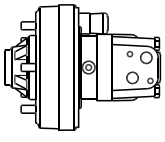

151-1188.10

Motors with integrated negative holding brake

OMR motors are available with integrated multi-disc brake that is released by hydraulic pressure. The brake motor can be used in closed loop or open loop systems.

Type designation: OMR F

Selection of Motor Type

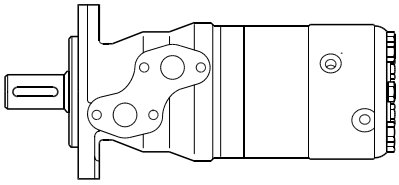

151-1797.10

OMT and TMT with integrated multi-disc brake is available in four versions:

OMT FH, OMT FL, OMT FX and TMT FL. The brake is a spring activated multi-disc type that is released by a hydraulic pressure. OMT FH can work with high drop pressure [e.g. piloted from a shuttle valve in open loop systems], whereas OMT FL, OMT FX and TMT FL release the brake at low pressure [e.g. piloted from the charge pump in closed loop systems]. OMT FX are particularly well-suited for applications that require very short installation dimensions, - for example in road rollers and wheels.

The design of the OMT F and TMT F motors allows the brake to be used as dynamic emergency brake as well.

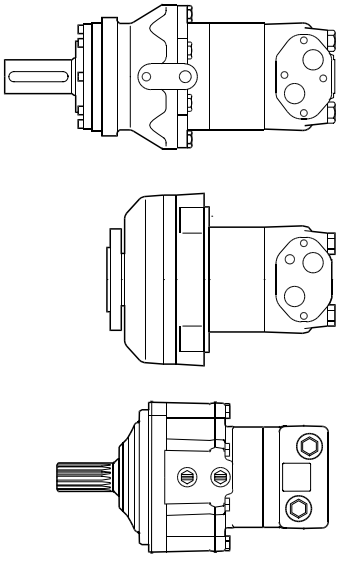

151-1425.10

Motors with integrated flushing valve

Without any change to their outer dimensions, OMS, OMT, OMV and TMT are available with an integrated flushing valve.

The integrated flushing valve ensures continuous renewal and cooling of the oil in the closed circuit. The flushing valve is activated by the high pressure side of the motor and allows the flushing flow to pass to the drain line and the tank.

Type designation: OMS V, OMT V, OMV V and TMT V .

Selection of Motor Type

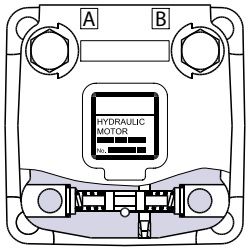

151-1627.10

Motors with tacho connection

OMS, OMT and OMV motors are available in a version with tacho drive shaft. With a tacho connection the speed of the motor can be registered.

Type designations are OMS T, OMT T and OMV T.

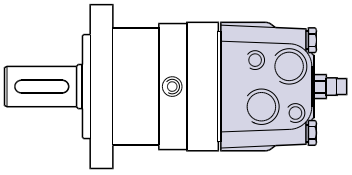

151-1372.10

Motors with speed sensor

OMM, OMP, OMR, OMS, OMSW, OMT and OMV are available with integrated speed sensor. The electric output signal is a standardized voltage signal that may for example be used with Danfoss' electronic module type EHSC to control the speed of the motor. The speed is registered by an inductive sensor.

Signal processing and amplification are integrated in the housing of the sensor.

Type designation: OM - EM.

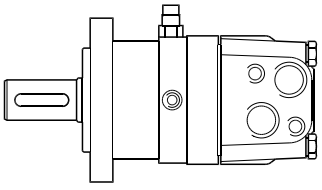

151-1569.10

OMT N motor

OMT is available in a short version with high bearing capacity. The motor is very suitable for the propulsion of road rollers and similar equipment.

Type designation: OMT N

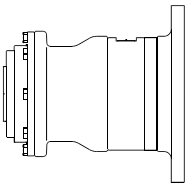

151-1796.10

Selection of Motor Size

When a certain motor type has been selected in accordance with the requirements of the individual application, the size of the motor is determined according to the torque and speed required for the application.

For this purpose use the bar chart on the first pages of the subcatalogues and the function diagram for the individual motor.

Build-up of the Function Diagram

The function diagram for a hydraulic motor shows the relation between operating torque M (vertical axis) and speed n (horizontal axis) at different pressure drops Δp and oil flows Q.

The curves for constant pressure drop and constant oil flow form a network superimposed on the coordinate system grid. The curves for constant power output N (hyperbolas] and constant total efficiency ηt are also plotted. The latter curves have a ring form, to as on mussel shells. For this reason function diagrams are often called shell diagrams.

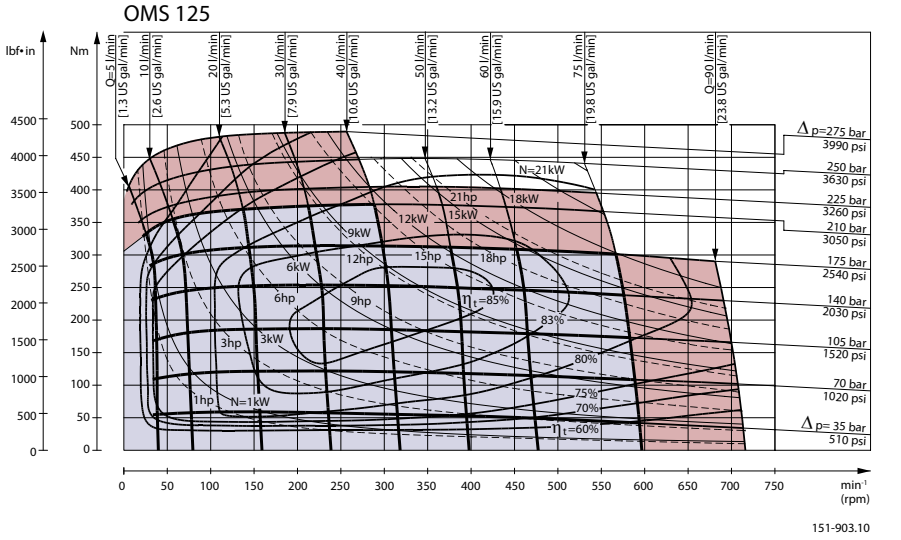

Continuous operation/intermittent operation/peak load

The function diagrams are divided up into a dark area A and two light areas B.

The dark area A represents the continuous range of the motor. Within this range the motor is able to run continuously with optimum efficiency and operating life.

The two light areas B represent the intermittent range of the motor. It is advantageous to make use of the intermittent range when the motor works with varying loads, but also to allow for braking torques when reversing direction.

It is permissible to subject the motor to intermittent speed or intermittent pressure drop for max. 10% of every minute. The motor should not be subjected to intermittend speed and intermitend pressure drop at the same time.

The upper limits for intermittent pressure drop and torque must not be exceeded for more than 1% of every minute (peak load). The max. peak load value is stated in the technical data for each type of motor. High pressure peaks occur, for example, when a pressure relief valve opens or a directional valve is opened or closed. Pressure relief valves and dual shock valves should be set so that pressure peaks do not exceed the max. peak values. In systems with large pressure oscillations the pressure and torque peaks should be measured with electronic equipment.

To give problem-free operation the motor size should be selected using the permissible continuous and intermittent values while making sure that pressure peaks do not exceed the max. peak values.

Selection of Motor Size

Efficiency

The total efficiency η_t is the product of the volumetric efficiency (η_v) and the hydraulic-mechanical efficiency (η_{hm}). Thus $\eta_t = \eta_v \times \eta_{hm}$.

Volumetric efficiency

The volumetric efficiency is an expression for the proportion of the applied quantity of oil [as a percentage] that is converted to output shaft revolutions (speed). The remaining quantity of oil (leakage) is led across clearances and sealing surfaces to act as a lubricant/coolant.

When the load (pressure drop) increases, leakage also increases.

The quantity of oil supplied to the gearwheel set thus diminishes, and the number of revolution (speed) falls.

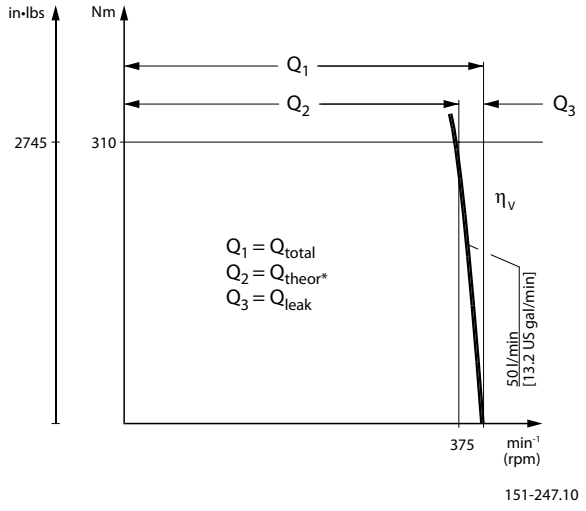

The slope of the Q-curve expresses the magnitude of the efficiency

Example

An OMS 125 is to drive a shaft at a speed of 375 min^{-1} (rpm) with an applied torque of 310 Nm [2745 lbf•in].

If the volumetric efficiency was 100% the oil quantity would be the geometric displacement times the number of revolutions.

Theoretical supplied oil quantity:

Metric

$$Q_{theor} = \frac{\text{Displ. (cm}^3\text{)} \cdot \text{speed (min}^{-1}\text{)}}{1000} \text{ (l/min)} = \frac{125.7 \cdot 375}{1000} \sim 47 \text{ l/min}$$

US units

$$Q_{theor} = \frac{\text{Displ. [in}^3\text{]} \cdot \text{speed [rpm]}}{231} \text{ [US gal/min]} = \frac{7.67 \cdot 375}{231} \sim 12.45 \text{ US gal/min}$$

However, the actual supplied oil quantity is 50 l/min [13.2 US gal]. The volumetric efficiency can be calculated as follows:

Metric

$$\eta_v = \frac{47 \cdot 100}{50} \sim 94\%$$

US units

$$\eta_v = \frac{12.45 \cdot 100}{13.2} \sim 94\%$$

Selection of Motor Size

Hydraulic mechanical efficiency

The hydraulic mechanical efficiency is an expression for the proportion of applied pressure (as a percentage) that is converted to output shaft torque.

The remaining pressure is loss; either mechanical loss at low speeds or hydraulic loss at high speeds, as can be seen on the torque graph (pressure-drop curve). Mechanical loss is greatest at motor start-up because a film of lubricant has not yet been built up on moving parts. After a few revolutions the film is established and friction is reduced (the curve steepens). Hydraulic loss is greatest at high speeds because of the high pressure losses in ports and oil channels when oil flow is high. Therefore the pressure drop across the gearwheel set becomes less and the motor yields less torque.

OMS 125 has a minimum starting torque of 260 Nm [2300 lbf•in] at a pressure drop of 175 bar [2540 psi], as given in the OMS technical data table. When the lubricant film is established, the motor yields 310 daNm [2745 lbf•in] with the same pressure drop.

On the function diagram the pressure drop curve does not intersect the torque axis, but min. starting torque at max. continuous and max. intermittent pressure drop is given in the technical data for each motor type.

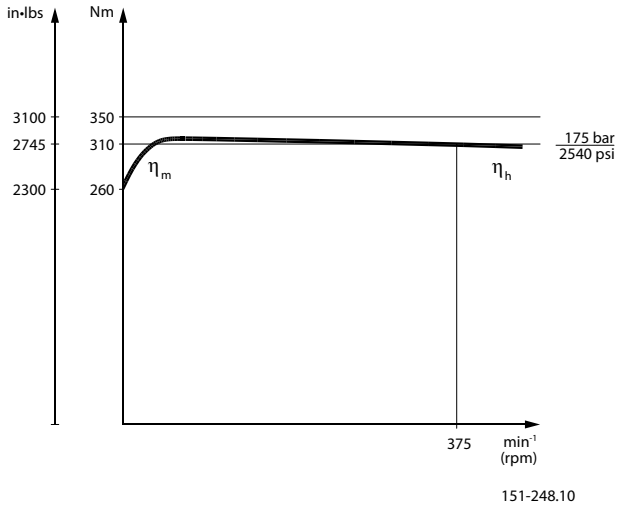

Example:

To calculate the hydraulic-mechanical efficiency ηhm, it is necessary to first read off (measure) the motor torque Tmot eff for a given oil flow and given pressure drop. The *function diagram efficiency graphs* show that an OMS 125 gives a torque of 310 Nm [2745 lbf•in] for a pressure drop of 175 bar [2540 psi] and an oil flow of 50 l/min [13.20 US gal/min].

The theoretical motor torque for the same pressure drop can be calculated as follows:

Metric

$$T_{theo} = \frac{\text{Displ. (cm}^3\text{)} \cdot \text{pressure drop (bar)}}{62.8} \text{ (Nm)}$$

US unit

$$T_{theo} = \frac{\text{Displ. (in}^3\text{)} \cdot \text{pressure drop (psi)}}{6.28} \text{ [lbf•in]}$$

Metric

$$T_{theo} = \frac{125.7 \cdot 175}{62.8} \sim 350 \text{ Nm}$$

US units

$$T_{theo} = \frac{7.67 \cdot 2540}{6.28} \sim 3102 \text{ lbf-in}$$

Dividing the read-off (measured) torque by the theoretical torque gives the hydraulic-mechanical efficiency:

$$\eta_{hm} = \frac{310 \cdot 100}{350} \sim 89\%$$

$$\eta_{hm} = \frac{2745 \cdot 100}{3102} \sim 89\%$$

Selection of Motor Size

Total efficiency

It is now possible to calculate the total efficiency of OMS 125 at Δp = 175 bar [2540 psi] and Q = 50 l/min [13.2 US gal/min]:

$$\eta_t = \frac{\eta_v \cdot \eta_{hm}}{100} = \frac{94 \cdot 89}{100} \sim 84\,\%$$

With an acceptable degree of accuracy the same total efficiency can be read from the *function diagram efficiency graphs*.

Use of the Function Diagram

The function diagram is for use when the right Danfoss motor (and pumps, etc.) has to be selected for an application.

For example, a motor is required with an output:

Max. cont. speed: 425 min^{-1} (rpm)

Max. cont. torque: 260 Nm [2300 lbf•in]

In the subcatalogues and in the survey brochure the maximum speed and torque of the different motors can be compared. The smallest motor able to meet the requirements is to be found in the OMR or OMS series. But only OMR 125, OMS 125, and OMS 160 can meet both the required speed and torque.

The function diagrams for OMR 125, OMS 125 and OMS 160 can now be used. Find the operating point concerned, i.e. the torque on the vertical axis T = 260 Nm [2300 lbf•in], speed on the horizontal axis n = 425 min^{-1} (rpm).

The position of the operating point (T,n) in relation to the curves for constant pressure drop Δp, constant oil flow Q, and constant total efficiency η_t, gives the following associated values:

Motor	Pressure (Δp)		Oil flow (Q)		Efficiecy
	bar	[psi]	l/min	[US gal/min]	ηt (%)
OMR 125	158	[2292]	59	[15.59]	73
OMS 125	145	[2103]	56	[14.79]	83
OMS 160	119	[1726]	70	[18.49]	81

Which is now the most important factor in an overall economic and technical assessment: the initial price of the hydraulic system, its efficiency or its operating life?

If the answer is the price of the motor, the choice is an OMR 125. The choice between OMR 125 and OMRW 125 N is made according to the required bearing load.

If the efficiency of the motor is all-important, the choice is an OMS 125. The slightly higher initial price of OMS 125 compared with OMR 125 will often be compensated for by a better system design with associated savings in running costs and reduced heat generation. As an additional advantage OMS 125 also requires the least oil flow.

When it comes to operating life being the most important factor, the choice is an OMS 160. It has the least working pressure and thereby gives the longest system operating life.

When the size of motor has been decided, the capacity of the pump can be determined. If, for example, the choice had been an OMS160 , the pump would have had to be able to deliver 70 l/min[18.49 US gal/min] at 119 bar [1726 psi].

If a hydraulic motor is to be installed in an existing system with a given pump, then the choice of motor is largely predetermined.

Selection of Motor Size

Minimum Speed

At very low speeds, the motors may run less smoothly. This is why a min. speed is stated for each type of motor. In borderline cases a motor of the desired type should be tested under the required operating conditions in the system concerned before finally selecting the motor size and type.

To obtain smooth running at very low speed the motor leakage must be constant. Therefore it is recommended that a motor with disc valve (OMS, OMT, OMV or TMT) be chosen, but avoid choosing motors with the smaller displacements. The best results are achieved with a constant load, a return pressure of 3-5 bar [45-70 psi] and an oil viscosity of min. 35 mm^2/s [164 SUS].

Bearing Dimensioning

Shaft load and bearing life time

In many applications the hydraulic motors must absorb both

- external radial and axial forces acting directly on the output shaft of the motor (e.g. from the weight of a vehicle)
- radial forces produced by torque transfer from gearwheels, chainwheels, V-belts or winch drums.

For such applications hydraulic motors with built-in rolling bearings are particularly suitable. Two different types of bearing are used in Danfoss hydraulic motors:

1. Needle bearings in OMPW N, OMRW N and OMEW. The needle bearings are capable of absorbing large radial forces. As the motors have separate axial bearings, the operating life of the needle bearings is not affected by the size of the axial load.
2. Tapered roller bearings in OMS, OMSW, OMT, OMTW, OMV, OMVW and TMT. The tapered roller bearings can absorb large radial and axial forces.

The largest possible bearing capacity for the individual motor type is obtained by using OMPW N, OMRW N, OMEW, OMSW, OMTW, or OMVW because the recessed mounting flange makes it possible to fit for example wheel hubs and winch drums so that the radial load is applied centrally to the two bearings.

Motor with needle bearings

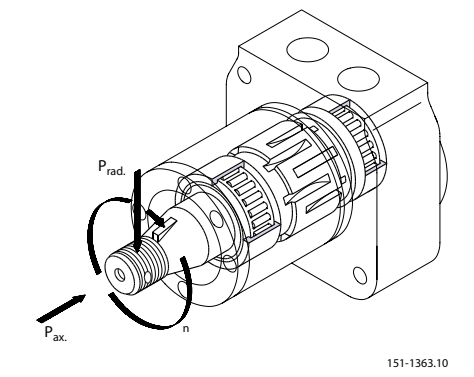

Motor with tapered roller bearings

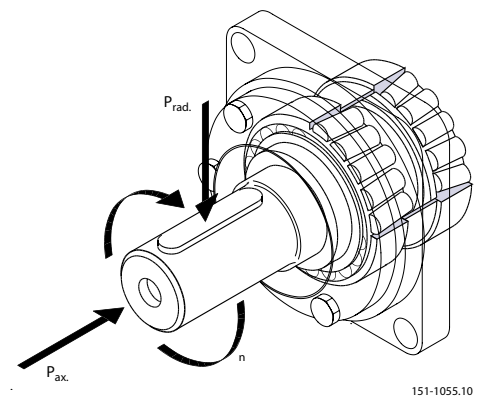

Relationship between Bearing Life Time and Speed

It is a general rule that life time and speed are inversely proportional: life is doubled when speed is halved. So life can easily be calculated for other speeds than those given in the sections on shaft load in the individual subcatalogues.

The relation is expressed by the formula:

Bearing Dimensioning

$L_{new} = L_{ref} \times (n_{ref} / n_{new})$

where L_{new} is the life time at speed n_{new}, and L_{ref} and n_{ref} are the data for the given motor type found in the subcatalogue.

Relationship between Shaft Load and Bearing Life Time

Lower shaft loads result in longer life time of the bearings. The exact relationship is shown by the following formula:

$$\frac{L_{new}}{L_{ref}} = \left(\frac{P_{ref}}{P_{new}}\right)^{3.3}$$

L_{new} is the bearing life at a shaft load of P_{new}, and L_{ref} and n_{ref} are data from the subcatalogue.

- The formula applies to OMPW N, OMEW and OMRW N regardless of the relation between the axial and radial loads.
- With the other motors the formula only applies if there is a constant relation between the axial and radial loads.

Relationship between permissible shaft load and speed

In certain applications the motor must run at low speeds while the bearings must absorb high loads. This is the case for example when the motors are vehicle support elements. In such cases the following relationship between speed and bearing load (with unchanged bearing life time) must be taken into account:

$$\frac{P_{new}}{P_{ref}} = \sqrt[3.3]{\frac{n_{ref}}{n_{new}}}$$

P_{new} is the shaft load at n_{new}. P_{ref} and n_{ref} are data from the subcatalogue.

For $n_{ref} = 200$ min^{-1} [rpm] we have the following table for

P_{new} / P_{ref}:

n_{new} / min^{-1} (rpm)	25	50	100	200	300	400	500	600	700
P_{new} / P_{ref}	1.88	1.52	1.23	1.00	0.88	0.81	0.75	0.72	0.68

Maximum Radial Shaft Load

The calculations above are solely for bearing life time and load capacity. But there is also a limit to how much load the other parts of the motor (bearing housing, mounting flange and output shaft) can carry. For this reason the maximum shaft load is limited to avoid the risk of mechanical breakdown.

The maximum shaft load is shown in the shaft load diagrams for OMPW N, OMRW N, OMEW, OMS, OMT, OMV and TMT motors.

Please contact the Danfoss sales organisation for hydraulics if motors are to be subjected to shaft loads higher than the maximum, or where there are particularly high dynamic effects (shock factor > 3).

Hydraulic Systems

Max. Pressure on the Shaft Seal

Danfoss hydraulic motors can be supplied fitted with one of three different shaft seals:

Standard shaft seal (NBR)

The standard shaft seal in Danfoss hydraulic motors has a long operating life and even under extreme conditions retains its sealing capability. With optimal lip design, the shaft seal withstands both high pressures and high speeds.

High-pressure shaft seal (NBR)

The high-pressure shaft seal (HPS) is a development of our standard shaft seal and the integrated backing ring makes an external drain line superfluous in most operating conditions.

Viton shaft seal (FPM)

If a synthetic fluid is to be used in our hydraulic motors we recommend a Viton shaft seal.

Characteristics of sealing materials

Material	Temperature ˚C [˚F]	Remarks
NBR	-30 to + 100 [-22 to 212]	Swells up on contact with most syntetic fluids Can be used with Emulsions and Mineral oils
FPM	-30 to + 150 [-22 to 302]	Ideal for mineral oil, synthetic fluids and emulsions

All Danfoss motors, except the OMEW, are 3-cham-ber type of motors, i.e. this type og motor isolates the high pressure from the case, which allows the use of an external drain when return line pressure is excessive. These motors are offered with the following option:

Motors with check valve

The check valve means that the pressure on the shaft seal never exceeds the pressure in the return line. If the motor contains check valves and there is no drain line, the motor return pressure must always be less than or equal to the maximum permissible pressure on the shaft seal graph in the subcatalogue.

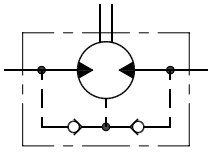

151-1803.10

Motors with drain line

The drain line relieves the pressure on the shaft seal to tank. That is to say, the tank pressure must be less than or equal to the max. permissible pressure on the shaft seal graph in the subcatalogue.

Hydraulic Systems

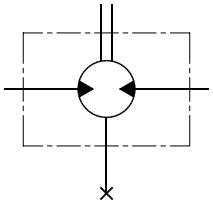

151-1807.10

Motors without check valve and drain line

The pressure on the shaft seal is equal to the average of the inlet pressure and return pressure:

$P_{seal} = (P_{inlet} + P_{return}) / 2$

P_{seal} must be less than or equal to the max. permissible pressure on the shaft seal graph in the subcatalogue.

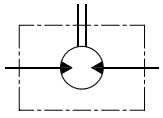

151-1743.10

OMEW

The OMEW is a 2-chamber rotor with a high-pressure shaft seal. The OMEW motor is available in CW version (clockwise rotation) and CCW version (counter clockwise rotation).

Depending on the motor rotation the pressure on the shaft seals is as follows:

OMEW with high pressure shaft seal

CW version (clockwise rotation)

1. By clockwise rotation: The shaft seal pressure equals the return pressure.
2. By counter clockwise rotation: The shaft seal pressure equals the input pressure.

CCW version (counter clockwise rotation)

1. By counter clockwise rotation: The shaft seal pressure equals the return pressure.
2. By clockwise rotation: The shaft seal pressure equals the input pressure.

Short/ultra-short motors

For these motors it is the values of the pressure on the shaft seal in connected component (e.g. a gear) that applies.

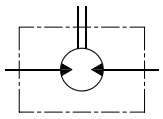

151-1743.10

Hydraulic Systems

Drain Line

Application

The drain line relieves pressure on the shaft seal to tank. The following main rules apply to drain lines fitted to Danfoss hydraulic motors:

- We recommend a drain line when the maximum pressure on the shaft seal is exceeded, i.e. the life of the shaft seal can otherwise be significantly reduced.
- We always recommend a drain line when
  - a short motor is built together with a gear.
  - the motor is used in hydrostatic transmissions that do not have a separate flushing valve.

Oil flow in the drain line

When the size of the supply pump in a closed hydraulic circuit is to be calculated, it is necessary to know the maximum oil flow in the drain line. The maximum oil flow in the drain line for Danfoss hydraulic motors is given in the technical data in the catalogue for each motor type.

Braking

Danfoss hydraulic motors are often used to brake a load. Here the motors operate as pumps that convert the kinetic energy of the load (mass, speed) to hydraulic energy (oil flow, pressure). Examples of these types of applications are:

- Crane winches on vehicles
- Net winches on fishing vessels
- Top jib slewing on cranes and excavators
- Hydrostatic transmissions

The speed at which the load is braked is determined by the motor braking torque and the opening pressure of the dual shock valve.

Braking torque

With a motor, the hydraulic-mechanical efficiency means that the effective torque is lower than the theoretical torque.

$T_{motor\ eff} = T_{theor} \times \eta_{hm}$ (1)

With a pump, the hydraulic-mechanical efficiency means that the effective torque that must be applied to the pump to create a given pressure drop is greater than the theoretical pressure drop.

$T_{pump\ eff} = T_{theor} / \eta_{hm}$ (2)

When a hydraulic motor is used as a pump (for braking) the ratio between braking torque and effective motor output for a given pressure drop is as follows:

$T_{brake} = T_{theor} / \eta_{hm}$ (see 2) where

$T_{theor} = T_{motor\ eff} / \eta_{hm}$ (see 1)

$T_{brake} = T_{motor\ eff} / (\eta_{hm})^2$

We recommend the use of the following braking torques for Danfoss hydraulic motors:

- OMS, OMT, OMV,TMT : $T_{brake} \sim 1.2 \cdot T_{motor\ eff}$.
- Other motors : $T_{brake} \sim 1.3 \cdot T_{motor\ eff}$.

$T_{motor\ eff}$ can be read from the function diagram for the individual motor sizes.

The braking torque must not be greater than the maximum motor operating torque.

The maximum torque is given in the technical data for each motor type.

Hydraulic Systems

Opening pressure for the dual shock valve

The braking torque can be regulated by setting the opening pressure of the dual shock valve. The opening pressure should be set at max. oil flow, in that a 20-30% increase in opening pressure can be expected when the oil flow is changed from minimum to maximum.

To avoid excessive pressure peaks, the dual shock valve should be rapid acting and be installed as close to the hydraulic motor as possible.

Replenishment

When Danfoss hydraulic motors are used to brake a load, effective replenishment is necessary. Inadequate replenishment can give rise to:

- cavitation in the gearwheel set
- insufficient braking capacity

There must therefore be positive charge pressure in the motor "suction" port.

The charge pressure (p_s) must therefore be greater than the pressure drop in the motor oil channels feeding the gearwheel set.

The pressure drop in the oil channels depends on the motor type, oil flow and oil viscosity. The pressure drop graphs for each motor type are given in the respective catalogues.

The supply pressure should constitute half the pressure drop (pd) given on the graph:

$p_s = p_d / 2$

The charge pressure is always measured at the motor "suction" port.

In closed circuits the supply pressure will always be positive when the system is fitted with a charge pump (p_s ~ 10-15 bar [145-217 psi]).

In open systems where the hydraulic motor drives a load with high inertia, it is necessary to establish replenishment as shown in fig. 1.

The opening pressure of the check valve must be greater than the sum of the charge pressure (p_s) and the pressure drop between check valve and motor "suction" port.

Hydraulic Systems

Fig. 1

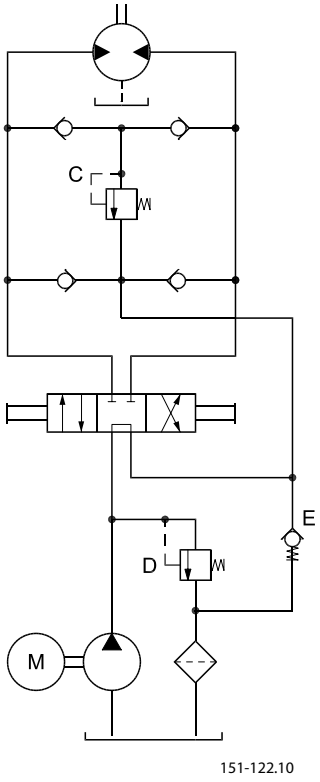

C: Shock valve

D: Pressure relief valve

E: Spring-loaded
check valve

Special conditions apply to open circuits where the hydraulic motor drives a load with high inertia. When the directional valve changes from I to II, the oil flow from pump to motor is shut off.

Load inertia will continue to drive the pump and for the same reasons as above a check valve should be installed to ensure replenishment, otherwise oil will be emptied from the motor see fig. 2.

Hydraulic Systems

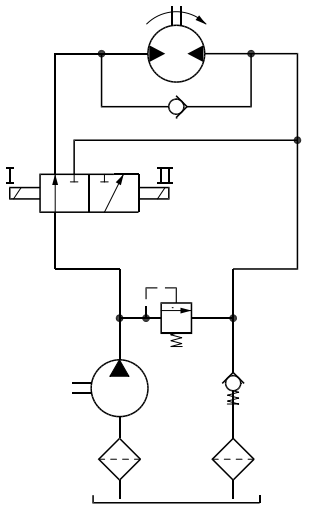

151-1142.10

Seeping

To prevent the load from moving during long periods, two precautions must be taken:

1. If the motor has a drain line it is necessary to ensure replenishment, otherwise oil will be gradually emptied from the gearwheel set and the load will fall freely. The best method is shown in fig.
2. A orbital motor cannot retain a load in a given position without movement. Internal leakage [seeping] in the motor will result in the load moving. Therefore, with hydrostatic transmissions, with crane slewing and with winches and hanging loads, Danfoss motors with integral holding brakes should be used.

   Alternatively, the drive shaft should be equipped with an external holding brake see fig. 3.

Fig. 3

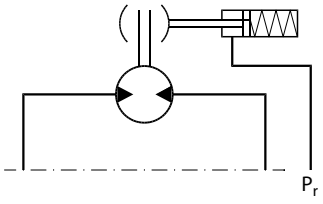

151-1143.10

Brake Motors

Danfoss OMR, OMS, OMT and TMT motors are available with integrated brake:

- OMS B with drum brake activated by a mechanical operating lever.
- OMR F, OMT FX, OMT FL, TMT FL and OMT FH with spring-activated multidisc brake released by hydraulic pressure.

Hydraulic Systems

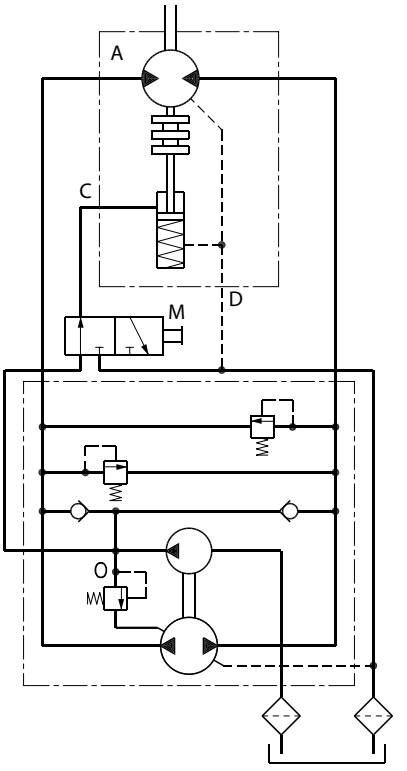

A: Brake motor

C: Brake release port

D: Drain connection

M: Directional valve

O: Charge pump

OMS B

OMS B has a built-in mechanically activated drum brake. The motor can be braked by operating the brake lever. The brake function is therefore not an integrated part of the hydraulic system.

OMR F, OMT FX, OMT FL and TMT FL

These motors are suitable for hydrostatic transmissions and other closed circuits.

- the supply charge pump pressure is sufficient to release the brake.

The directional valve (M) can be coupled to the vehicle controls so that the brake pressure is automatically released to tank when the vehicle stops.

OMR F and OMT FH

These motors are designed for open circuits and withstands max. system pressure in the brake release line, even when the brake is released at low pressure. Brake release can be controlled by connecting the release port to the pump line.

In addition, either a changeover valve can be installed to give automatic brake release or a directional valve to control brake release.

Hydraulic Systems

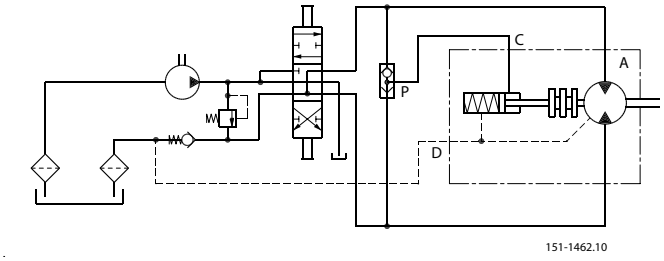

A: Brake motor

C: Brake release port

D: Drain connection

P: Shuttle valve

Brake motors must always have a drain line

Installation, Starting Up, Maintenance and Oil Types

Design in brief

- To ensure optimum operation all hydraulic components must be installed in accordance with their individual instructions.
- The pump line must contain a pressure gauge connection.
- To ensure correct joint contact and minimise material stress, all mounting flanges must be plane. Hydraulic lines must be installed correctly to avoid air pockets inside them.

Combination in brief

- Hydraulic components must be installed in accordance with their individual instructions.
- To avoid contamination, plastic plugs in connection ports must not be removed until just before connections are made.
- There must be full contact between motor mounting flange and connecting part.
- Avoid pressing the motor into place by tightening the fixing bolts.
- Avoid unsuitable seal materials, e.g. twine, teflon, etc., on threaded unions. Use only the seals supplied, such as O-rings, steel washers, etc.
- When tightening unions, never use more torque than the max. values given in instructions.
- Check to make sure the purity of the oil is better than 20/16 (ISO 4406) and always use a filter when replenishing the system.

Starting up and running in the hydraulic system

- Pour the oil through a fine-mesh filter and fill up the tank to the top level mark.
- Start the drive motor and allow it to run at its lowest speed, if possible. If the motor has bleed screws, allow them to remain open until the oil no longer foams.
- Check to make sure that all components are correctly connected (and that the pump runs in the correct direction, etc.).
- If a load-sensing system is involved, make sure there is no air in the signal lines.

Hydraulic Systems

Signs of air in the hydraulic system

- Foam in the tank
- Jerky movements of motor and cylinder
- Noise

If there is air in the system

- Replenish the oil.
- Connect the system to a separate tank with filter (filter mesh max. 10 µm). The tank capacity must be twice the max. oil flow. Allow the system to run without load [no pressure] for around 30 minutes.
- Do not load the system until it has been completely bled and is clean.
- Check for system leakage and make sure it operates satisfactory.
- Replace the oil filter and, if necessary, replenish the oil.

During operation

- Do not subject the motor to pressure, pressure drop or speeds exceeding the maximum values stated in the appropriate catalogues.
- Filter the oil to maintain the grade of contamination at 20/16 (ISO 4406) or better.

Maintenance

- With hydraulic systems the main criterion for reliability and operating life is very thorough maintenance.
- Replenish and change the oil, the oil and air filters as stated in the respective
- instructions.
- Regularly check the condition of the oil, system leakage and the oil level.

Oil Types

In a hydraulic system the most important task of the oil is to transfer energy. At the same time the oil must lubricate moving parts in hydraulic components, protect them from corrosion, and conduct dirt particles and heat out of the system. To ensure that the hydraulic components operate without problems and have a long operating life it is therefore vital to select the correct oil type with the necessary additives.

Mineral oils

For systems containing Danfoss hydraulic motors, we recommend mineral hydraulic oil with anti-wear additives, type HLP [DIN 51524] or HM (ISO 6743/4). Mineral oils without anti-wear additives or engine oils can also be used, provided operating conditions are suitable.

If oil types that have not been classified are being considered, please contact the Danfoss Sales Organisation.

Non-flammable or biodegradable fluids

Danfoss hydraulic motors can also be used in systems with non-flammable or biodegradable fluids. However, the function and life of the motor will depend on the type and condition of the fluid used. To achieve satisfactory operation and life it is therefore necessary to match the operating conditions to the properties of the fluid used.

Before using non-flammable or biodegradable fluids we recommend contact with the Danfoss Sales Organisation.

Hydraulic Systems

Temperature, Viscosity and Filtering

Temperature

Ambient temperature should lie between -30°C [-22 °F] and +90°C [+210°F] to ensure that the shaft seal retains its sealing capacity.

Oil temperature should lie between +30°C [+85°F] and +60°C [+140°F] during normal operation. Oil life is greatly reduced if its temperature exceeds +60°C [+140°F]. As a general rule, oil life is halved for each 8°C [15°F] its temperature exceeds 60°C [+140°F].

Viscosity

The viscosity of the oil should lie between 20 mm^2/s and 75 mm^2/s [100 and 370 SUS] when the operating temperature of the system has become stabilised. We recommend the use of an oil type having a viscosity of 35 mm^2/s [165 SUS] at the actual operating temperature.

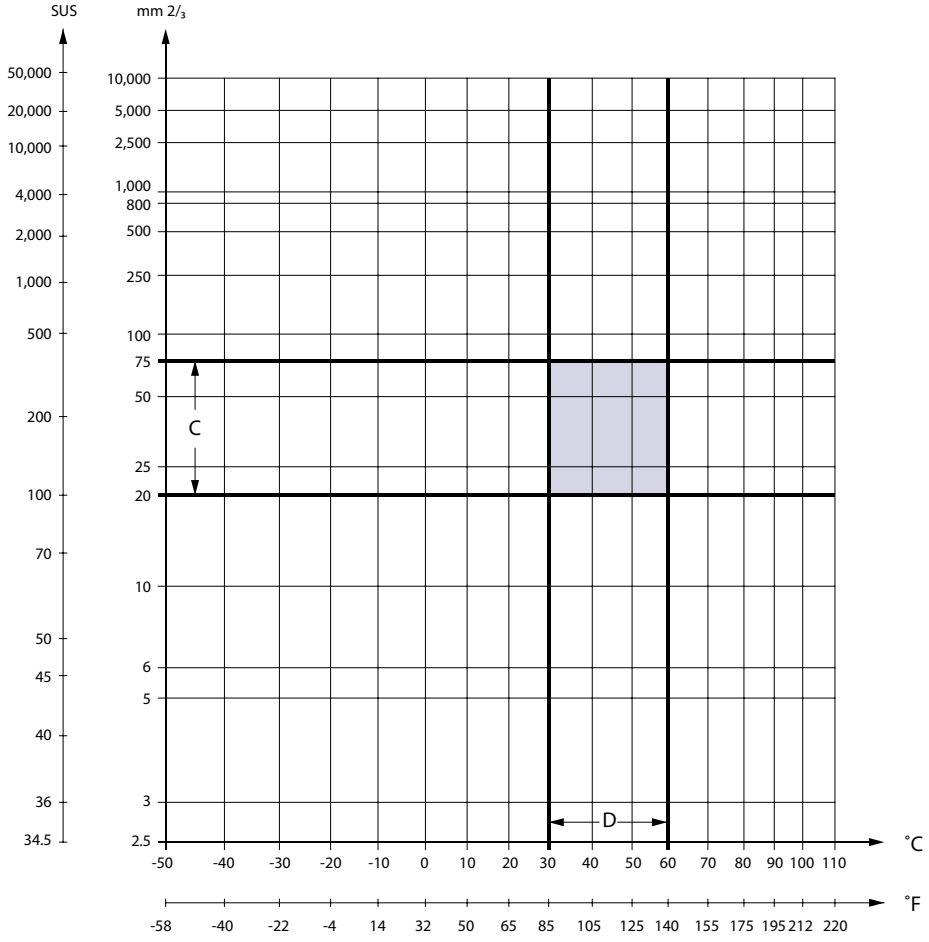

151-1321.10

C: Recommended viscosity range

D: Recommendatu temperatu range

Hydraulic Systems

Filtering

It is necessary to keep the level of oil contamination at an acceptable level to ensure problem-free operation. The recommended maximum level of contamination in systems with Danfoss hydraulic motors is 20/16 (see ISO 4406*). In our experience the 20/16 contamination level can be met by using a return filter finer than 40 µm absolute or 25 µm nominal. In very dirty environments, in complex systems, and in closed circuits, the recommended filtration level is 20 µm absolute or 10 µm nominal.

(In systems with quick release couplings a pressure filter having a fineness of 40 µm absolute should be inserted just ahead of the motor).

Products we offer:

- Bent Axis Motors
- Closed Circuit Axial Piston Pumps and Motors
- Displays
- Electrohydraulic Power Steering
- Electrohydraulics
- Hydraulic Power Steering
- Integrated Systems
- Joysticks and Control Handles
- Microcontrollers and Software
- Open Circuit Axial Piston Pumps
- Orbital Motors
- PLUS+1® GUIDE
- Proportional Valves
- Sensors
- Steering
- Transit Mixer Drives

Danfoss Power Solutions is a global manufacturer and supplier of high-quality hydraulic and electronic components. We specialize in providing state-of-the-art technology and solutions that excel in the harsh operating conditions of the mobile off-highway market. Building on our extensive applications expertise, we work closely with our customers to ensure exceptional performance for a broad range of off-highway vehicles.

We help OEMs around the world speed up system development, reduce costs and bring vehicles to market faster.

Danfoss – Your Strongest Partner in Mobile Hydraulics.

Go to www.powersolutions.danfoss.com for further product information.

Wherever off-highway vehicles are at work, so is Danfoss. We offer expert worldwide support for our customers, ensuring the best possible solutions for outstanding performance. And with an extensive network of Global Service Partners, we also provide comprehensive global service for all of our components.

Please contact the Danfoss Power Solution representative nearest you.

Comatrol
www.comatrol.com

Schwarzmüller-Inverter
www.schwarzmueller-inverter.com

Turolla
www.turollaocg.com

Valmova
www.valmova.com

Hydro-Gear
www.hydro-gear.com

Daikin-Sauer-Danfoss
www.daikin-sauer-danfoss.com

Local address:

Danfoss
Power Solutions (US) Company
2800 East 13th Street
Ames, IA 50010, USA
Phone: +1 515 239 6000

Danfoss
Power Solutions GmbH & Co. OHG
Krokamp 35
D-24539 Neumünster, Germany
Phone: +49 4321 871 0

Danfoss
Power Solutions ApS
Nordborgvej 81
DK-6430 Nordborg, Denmark
Phone: +45 7488 2222

Danfoss
Power Solutions
(Shanghai) Co., Ltd.
Building #22, No. 1000 Jin Hai Rd
Jin Qiao, Pudong New District
Shanghai, China 201206
Phone: +86 21 3418 5200

Danfoss can accept no responsibility for possible errors in catalogues, brochures and other printed material. Danfoss reserves the right to alter its products without notice. This also applies to products already on order provided that such alterations can be made without changes being necessary in specifications already agreed.
All trademarks in this material are property of the respective companies. Danfoss and the Danfoss logotype are trademarks of Danfoss A/S. All rights reserved.