SETTIMA®
research & innovation, always

GO SILENTLY AT HIGH PRESSURE & HIGH SPEED





INDUSTRIAL



MOBILE



MARINE

CONTINUUM® Series

Helical rotor pumps for high pressure and no noise application

The new generation of gear pumps for NO PULSATION & NO NOISE

QUALITY SYSTEM CERTIFICATION DNV·GL ISO 9001

Grampelhuber GmbH | www.grampelhuber.at
A-4810 Gmunden/Österreich
T: +43 (0)7612-64902-0 office@grampelhuber.at

www.settima.it

Continuum® pump / pompa Continuum®

Achieves better efficiency, lower production cost, better life quality for the industrial world.
Ottiene alti livelli di efficienza, ridotti costi di produzione ed una migliore qualità del lavoro.

Reducing noise in the workplace has become a necessity for many companies. By now most companies have recognized noise as a cost weighting on the economics of their businesses. Noise pollution remains a serious problem to be solved for both stationary and mobile machinery. Hydraulic pumps, above all those for high pressure, entail unacceptable noise and/or vibration levels in many different applications. Up to now the noise problem has always been approached in the only possible way: with secondary and expensive activities such as using pulsation dampers, hoses, damping rails and rings, encapsulating the hydraulic components or the entire system and so on. **SETTIMA** decided to start to design a new gear pumps generation capable to reduce as much as possible the acoustic emissions and the consequent vibration level. Some years ago the result was the **Continuum® pump series,** able to reduce down to 52 dB(A) the normal operation noise. Today **SETTIMA** presents the new generation of **Continuum® pumps**, silent as always, but much more efficient and with longer lifetime even at heavy duty, at all pressure and speed ranges.

The most important economic benefits of using **Continuum® pumps** are:
- very low pump pulsations reduce dramatically also vibrations with no dispersion of energy,
- saving money respect to the more expensive traditional pumps such as piston pumps and internal gear pumps,
- high volumetric efficiency, also at very low speed, contributes to cost reduction and also enables the pump to be driven by motor at a variable velocity with consequent energy saving,
- cost saving by eliminating second noise reduction measures,
- keeping the same external dimensions of gear pump, with no necessity to redesign the system in case of replacement.

COMPETITIVE ANALYSIS / *ANALISI COMPETITIVA*



Continuum® pump is a valid alternative to silently replace different traditional solutions of noisy high pressure pump.
Continuum® pump can replace the following types of high pressure pumps:
- External gear pumps
- Internal gear pumps
- Fixed displacement vane pumps
- Fixed displacement piston pumps

Please contact Settima for all information about any possible replacement.

ORIGIN OF NOISE AND VIBRATIONS KNOCKED DOWN BY CONTINUUM® PUMP / *LA POMPA CONTINUUM® HA ELIMINATO LE ORIGINI DEL RUMORE E DELLE VIBRAZIONI*

The typical sound emissions of gear pumps have two distinct origins: mechanical noise and hydraulic noise. The mechanical noise is what can be expected from any pair of gears. The hydraulic noise, however, is generated by the perturbations of fluid pressure through the pump. This noise and/or vibration comes from three basic components:
- cavitation, that can cause serious noise in addition to structural damage to mechanical components
- the peak pressure that arises from trapping of fluid between the top and the bottom of the tooth,
- the "ripple" or the flow pulsation during meshing that causes pressure pulsation.

The continuous contact helical rotor **Continuum® pump** has solved these problems with sophisticated and efficient systems.

THINK DIFFERENT: THE SILENT AND UNIQUE REVOLUTION OF CONTINUUM® PUMP / *UNA RIVOLUZIONE SILENZIOSA: LA POMPA CONTINUUM®*

As for classic gear pumps, the transport flow is perpendicular to the axes, but the rotors profile, specially developed and internationally patented, does not trap any volume since the helical design of the profile plays the role of completing an overlap, making a gentle transmission of fluid resulting in a dramatic reduction of pulsation. There is just a single point of contact between the profiles during rotation, which eliminates the pockets acting on the axial thrust washer and the noise associated with this problem.
The Continuum® core and its technological innovation is based on three patented breakthroughs:
- The rotor profile
- The screw step
- The inner force balancing.

SETTIMA® research & innovation, always
Grampelhuber GmbH | www.grampelhuber.at
A-4810 Gmunden/Österreich
T: +43 (0)7612-64902-0 office@grampelhuber.at

MANUFACTURING ACCURACY IN ANY DETAILS / *MASSIMA ACCURATEZZA NEI DETTAGLI*

SETTIMA produces hydraulic no noise pumps since over thirty years, achieving a high level of competence and accuracy in the manufacture of high-precision hydraulic pump drives.

Together with top production machineries, efficient test environments, 3D drawing capability and special materials for rotors and bushings, **SETTIMA** constantly achieves products of high quality that is the industry standard.

CONTINUUM® PUMP ADVANTAGES / *VANTAGGI DELLA POMPA CONTINUUM®*

- Low noise also at high speed (up to 6.500 RPM).
- Average of 15dB(A) less noisy than standard external gear pumps.
- Reduced noise level for the machine operator and surroundings.
- Cost saving by eliminating second noise reduction measures.
- Easy to replace - compatibile with all external gear pumps.
- Helps meet legal noise requirements.
- Continuous variable flow rate (0% to 100%).
- Intermittent operation at high pressure & low speed.
- High volumetrical efficiency.

PULSATIONS LEVEL GRAPH / *GRAFICO PULSAZIONI* (100 bar - 40 cSt - 1.500 rpm)

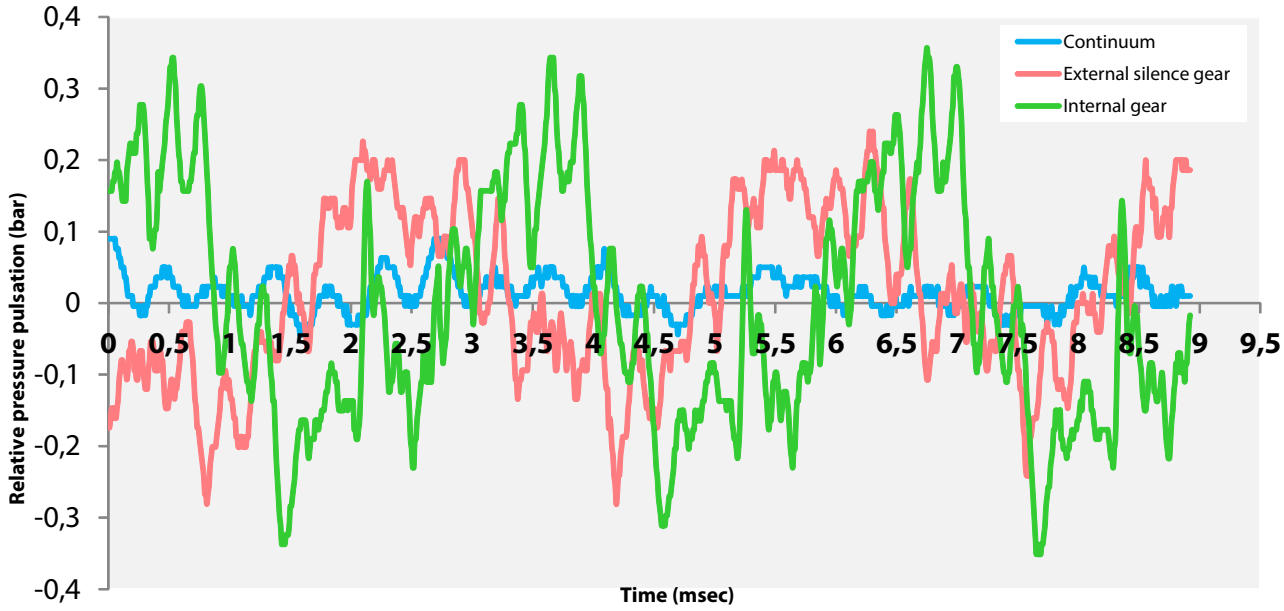

NOISE LEVEL GRAPH / *GRAFICO EMISSIONI ACUSTICHE* (150 bar)

GR 28

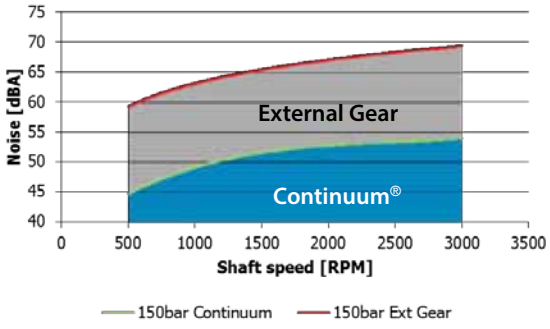

GR 33 - 38

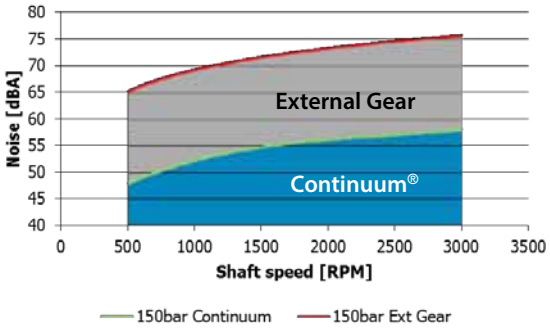

GR 47 - 55

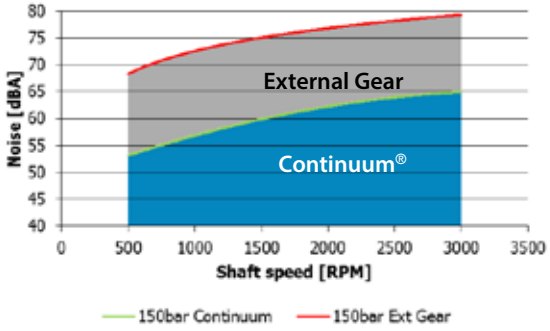

GR 72

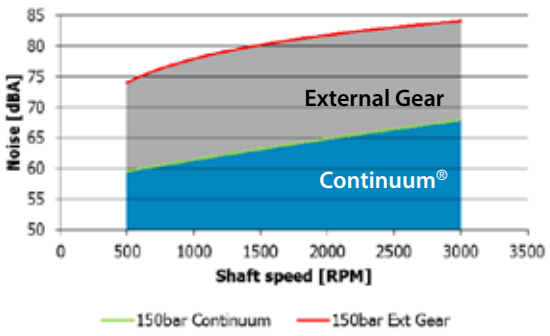

Pump displacements / Cilindrate

Group 1

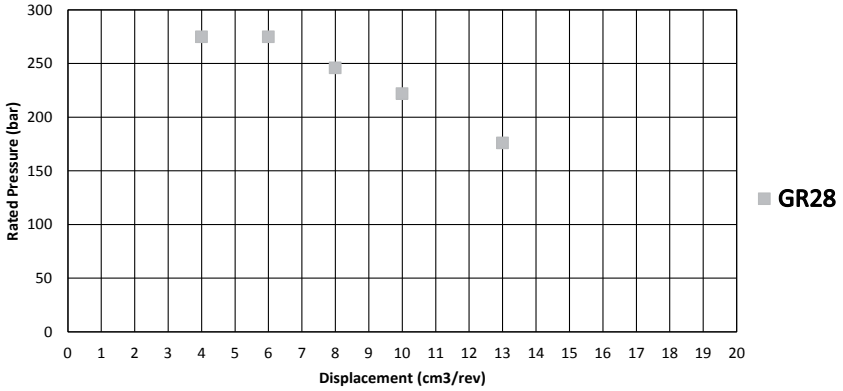

Group 2

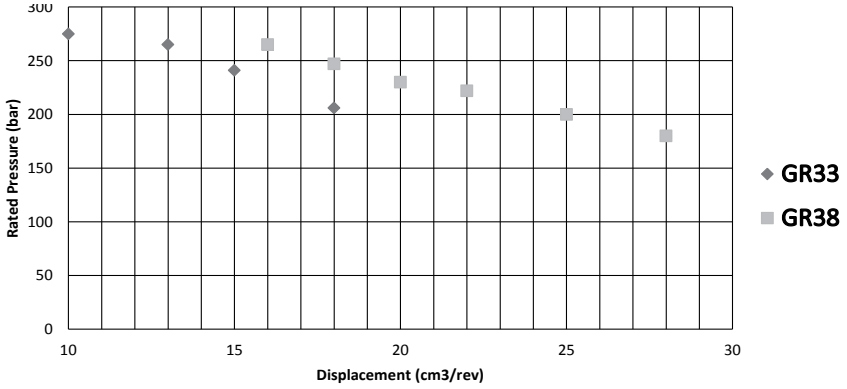

Group 3

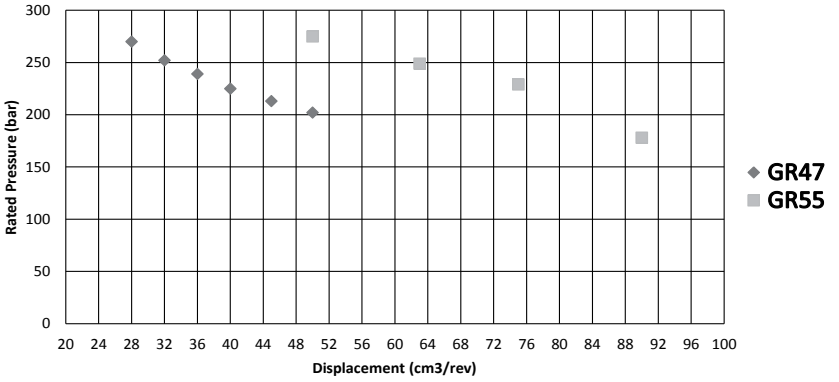

Group 4

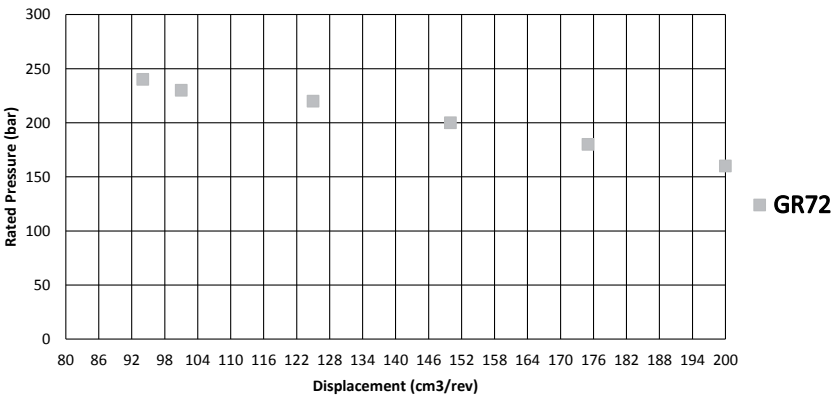

Grampelhuber GmbH | www.grampelhuber.at
A-4810 Gmunden/Österreich
T: +43 (0)7612-64902-0 office@grampelhuber.at

Applications / Applicazioni

INDUSTRIAL

Machine tools lubrication systems.

Lifting equipment, hydraulic systems for dock-levelers.

Hydraulic transmission systems.

Machines lubrication.

Chemical metering.

Hydraulic systems for injection moulding machines, presses, compactors and balers.

Systems for lubrication and cooling of gearboxes and bearings.

Hydraulic powerpack.

Hydro power.

Feeder system for filter circuits, cooling circuits, lubrication applications, pump transfer unit.

MOBILE

Ground-handling equipment.

Agricultural machinery.

Hydraulic systems for parking systems.

Steering units.

Torque converters & powershift transmissions.

Street-sweeping vehicles.

Shredder systems.

Waste container level lifter.

ENVIRONMENTAL INDUSTRY

Baler and compacting of waste.

Containers.

Hooklift containers.

Back loading containers.

Front loading containers.

Liftdumper containers.

Hooklift systems.

Garbage trucks.

Mobile compactors.

Stationary compactors.

MARINE

Marine power hydraulics.

Rudder actuators (tandem system).

Propeller pitch control.

Propeller drive (power transmission from engine).

Rotary vane steering gears.

Minipowerpacks (dock operation, door control).

Yacht building industry (lifting systems: fly bridge cranes, tenderlift, elevator, walkways, automatic swimming ladders, side boarding ladders, pitch controls and operations, hydraulic davits).









Technical characteristics / Caratteristiche tecniche

SPECIAL HELICAL ROTORS – CONTINUUM® represents an innovative and revolutionary gear pump. The patented profile of the **Continuum®** rotors permits just a single point of contact between gears: this results, together with a particular screw step and inner force balancing, in the total absence of trapped and compressed oil, and leads to no noise and no pulsation.

HIGH PRESSURE – CONTINUUM® has been designed for high pressure, high speed and heavy duty.

TANDEM GROUP – CONTINUUM® can be also assembled as a double pump, connecting two pumps from different groups: from group 1 to group 4.

Technical characteristics

Models / *Modelli*	28 - 33 -38 - 47 - 55 - 72 - 92* - 106*			
Flanges ***Flange***	Group 1 – Group 2 (European, German, BKT, SAE-A) – Group 3 (European, SAE-B) – Group 4 (SAE-D) *Gruppo 1 – Gruppo 2 (Europeo, Tedesco, BKT, SAE-A) – Gruppo 3 (Europeo, SAE-B) – Gruppo 4 (SAE-D)*			
Connections ***Connessioni***	BSPP (GAS) – SAE 3000/6000 PSI – FL 4 HOLES M6 SU Ø40 DN20 (mentioned connections depend on model) *BSPP (GAS) – SAE 3000/6000 PSI – FL 4 HOLES M6 SU Ø40 DN20 (in base al modello)*			
Installation position ***Posizione di installazione***	External and/or under oil *Esterna e/o immersa*			
Shaft rotation ***Rotazione***	Clockwise (please contact Settima for counter clockwise) *Destra (contattare Settima per sinistra)*			
Shaft speed ***Velocità di rotazione***	From 150 to 6.500 rpm (for usage below 1.000 rpm or over 1.800 rpm please contact Settima) *Da 150 a 6.500 rpm (per utilizzi a giri inferiori a 1.000 rpm o superiori a 1.800 rpm contattare Settima)*			
Flows ***Portate***	From 4 up to 220 cm3 – from 6L/min up to 330L/min (at 1.500 rpm) *Da 4 fino a 220 cm3 – da 6L/min fino a 330L/min (a 1.500 rpm)*			
Operating pressure ***Pressione operativa***	Max. Continuous: 275 bar Max. Cycle ON/OFF: 280 bar Max. Peak: 300 bar	Depending on models Depending on models Depending on models	*Max. Continuo: 275 bar* *Max. Ciclo ON/OFF: 280 bar* *Max. Picco: 300 bar*	*In base al modello* *In base al modello* *In base al modello*
Inlet pressure ***Pressione di aspirazione***	0.8 – 3 bar (depends on models) 0,8 – 3 bar (in base al modello)			
Fluids ***Fluidi***	- Mineral oil - Synthetic oil		*- Olio minerale* *- Olio sintetico*	
Viscosity ***Viscosità***	Possible: from 5 up to 800 cSt** Recommended: from 32 up to 150 cSt Starting condition: up to 3.000 cSt**		*Consentita: da 5 fino a 800 cSt*** *Raccomandata: da 32 fino a 150 cSt* *Condizioni di avviamento: fino a 3.000 cSt***	
Environmental temperature ***Temperatura ambiente***	From -15°C up to +60°C *Da -15°C a +60°C*			
Oil temperature ***Temperature olio***	From -15°C up to +80°C*** *Da -15°C a +80°C****			
Contamination level ***Livello di contaminazione***	Up to 8 NAS (18/17/14 ISO4406) (for heavy duty operations over 150 bar, over 4 working hours/day, 100 cycle/day oil ISO 46) *Fino a 8 NAS (18/17/14 ISO4406) (per lavoro ad alto sforzo oltre 150 bar, oltre 4 ore lavorative/giorno, 100 cicli/giorno olio ISO 46)*			
Filtration ***Filtrazione***	From 25 to 10 µm (for heavy duty operations over 150 bar, over 4 working hours/day, 100 cycle/day oil ISO 46) *Da 25 a 10 µm (per lavoro ad alto sforzo oltre 150 bar, oltre 4 ore lavorative/giorno, 100 cicli/giorno olio ISO 46)*			
Seals ***Guarnizioni***	NBR, FKM (others on request) *NBR, FKM (altri a richiesta)*			
Acoustic emissions ***Emissioni acustiche***	From 52 up to 63 db(A) at 2.950 rpm *Da 52 fino a 63 db(A) at 2.950 rpm*			
Flanges material ***Materiale delle flange***	Cast iron *Ghisa*			
Pump body / *Corpo*	Extruded aluminium alloy / *Alluminio estruso*			
Screws / *Viti*	Hardened steel / *Acciaio temprato*			

* Model GR92 and GR106 will be available soon. I modelli GR92 e GR106 saranno disponibili a breve.
** Please for more information about possible and starting conditions of viscosity contact Settima. Contattare Settima per maggiori informazioni sui livelli di viscosità possibili e quelli delle condizioni di inizio lavoro.
*** For higher temperature than 50°C, please, contact Settima.
Per temperature superiori a 50° C, contattare Settima.

SETTIMA® research & innovation, always
Grampelhuber GmbH | www.grampelhuber.at
A-4810 Gmunden/Österreich
T: +43 (0)7612-64902-0 office@grampelhuber.at

System requirements / Requisiti del sistema

Inlet pressure

The inlet vacuum must be controlled within the prescribed range in order to achieve the expected pump life and performance. The system design must meet inlet pressure requirements during all modes of operation.

Max. continuous vacuum	bar abs. [in. Hg]	0.8 [23.6]
Max. intermittent vacuum		0.6 [17.7]
Max. pressure		3.0 [88.5]

Peak pressure is the highest intermittent pressure allowed. The reaction time of the pressure relief valve determines the duration of operation at pressure above the rated value. The maximum time interval is 100 ms. The illustration to the right shows peak pressure in relation to rated pressure and reaction time (100 ms maximum).

Rated pressure is the average, regularly occurring, operating pressure that does not compromise the product's life and performance.

System pressure is the pressure differential between the outlet and inlet ports. System pressure must remain at, or below, the rated pressure during normal operation to achieve expected life.

Time versus pressure

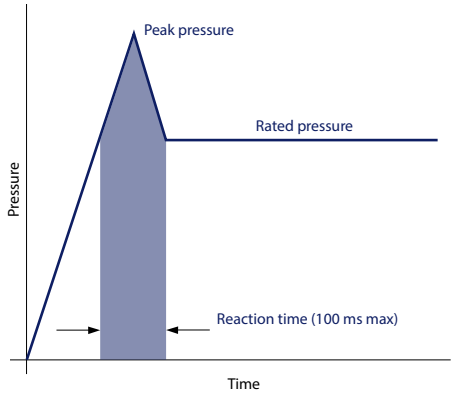

Hydraulic fluids

Ratings and data for Continuum® pumps are valid for operation with premium hydraulic fluids containing oxidation, rust, and foam inhibitors. These fluids must possess good thermal and hydrolytic stability to prevent wear, erosion, and corrosion of internal components. They include:

- Hydraulic fluids following DIN 51524, part 2 (HLP) and part 3 (HVLP) specifications
- API CD engine oils conforming to SAE J183
- M2C33F or G automatic transmission fluids
- Certain agricultural tractor fluids

Use only clean fluid in the pump and hydraulic circuit. Never mix hydraulic fluids.

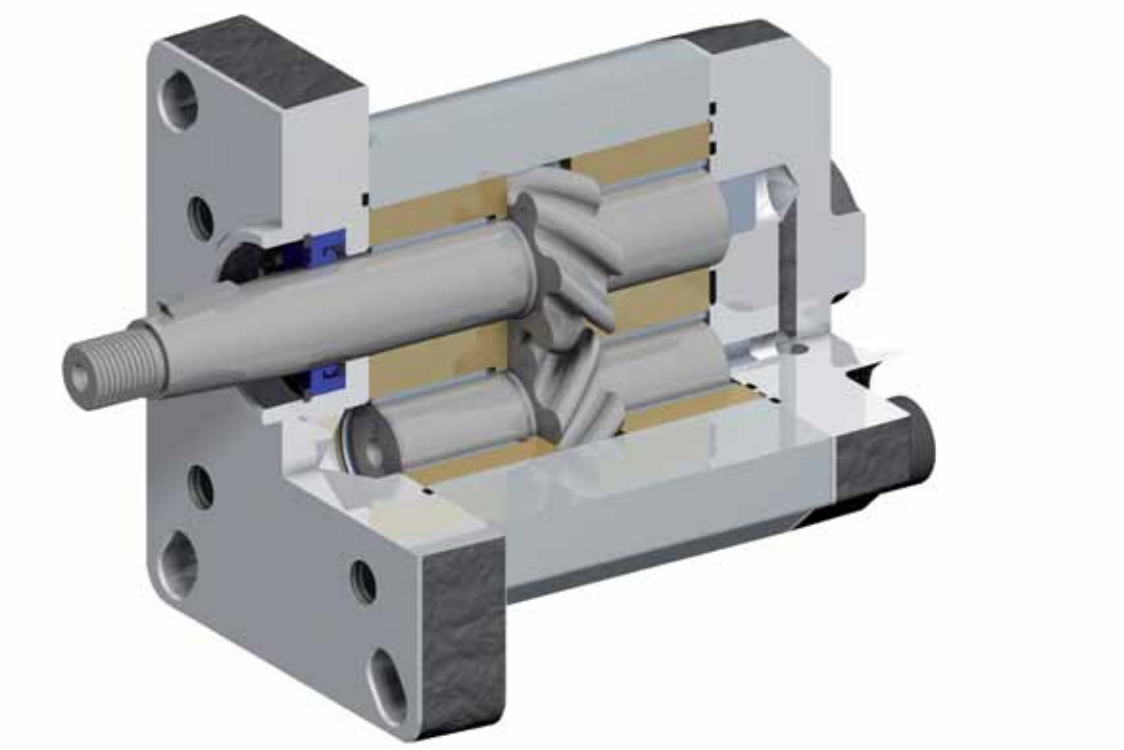

Temperature and viscosity

Temperature and viscosity requirements must be concurrently satisfied. Use petroleum / mineral-based fluids.

High temperature limits apply at the inlet port to the pump. The pump should run at or below the maximum continuous temperature. The peak temperature is based on material properties. Don't exceed it.

Cold oil, generally, doesn't affect the durability of pump components. It may affect the ability of oil to flow and transmit power. For this reason, keep the temperature at 16 °C [60 °F] above the pour point of the hydraulic fluid.

Minimum (cold start) **temperature** relates to the physical properties of component materials.

Minimum viscosity occurs only during brief occasions of maximum ambient temperature and severe duty cycle operation. You will encounter maximum viscosity only at cold start. During this condition, limit speeds until the system warms up. Size heat exchangers to keep the fluid within these limits. Test regularly to verify that these temperatures and viscosity limits aren't exceeded. For maximum unit efficiency and bearing life, keep the fluid viscosity in the recommended viscosity range.

Fluid viscosity

Maximum (cold start)	mm^2/s [SUS]	3000 [13904]
Recommended range		32-150** [148-695]
Minimum		5 [23]

Temperature

Minimum (cold start)	°C [°F]	-15 [-4]
Maximum continuous		50* [122]
Peak (intermittent)		90* [176]

*For higher temperature than 50°C, please contact Settima.
**For viscosity value out of this range, please contact Settima.

Filtration

Filters

A Class 18/17/14 of ISO 4406 (or better) filter must be used.

Selecting a filter

When selecting a filter, please consider:

- Contaminant ingression rate
  (determined by factors such as the number of actuators used in the system)
- Generation of contaminants in the system
- Required fluid cleanliness
- Desired maintenance interval
- Filtration requirements of other system components

Measure filter efficiency with a Beta ratio (β_X). For:

- Suction filtration, with controlled reservoir ingression, use a $\beta_{35\text{-}45} = 75$ filter
- Return or pressure filtration, use a pressure filtration with an efficiency of $\beta_{10} = 75$.

βx ratio is a measure of filter efficiency defined by ISO 4572. It is the ratio of the number of particles greater than a given diameter ("$_x$" in microns) upstream of the filter to the number of these particles downstream of the filter.

Fluid cleanliness level and βx ratio

Fluid cleanliness level (per ISO 4406)	Class 18/17/14 or better
β_x ratio (suction filtration)	$\beta_{35\text{-}45} = 75$ and $\beta_{10} = 2$
β_x ratio (pressure or return filtration)	$\beta_{10} = 75$
Recommended inlet screen size	100-125 µm [0.004-0.005 in]

The filtration requirements for each system are unique. Evaluate filtration system capacity by monitoring and testing prototypes.

SETTIMA® research & innovation, always
Grampelhuber GmbH | www.grampelhuber.at
A-4810 Gmunden/Österreich
T: +43 (0)7612-64902-0 office@grampelhuber.at

Reservoir

The **reservoir** provides clean fluid, dissipates heat, removes entrained air and makes up for changes in fluid volume due to fluid expansion-contraction and flow imbalances associated with differential cylinders. A correctly sized reservoir accommodates maximum volume changes during all system operating modes. It promotes de-aeration of the fluid as it passes through, and accommodates a fluid dwell-time between 60 and 180 seconds, allowing entrained air to escape.
Hydraulic oil contains 10% of dissolved air by volume in normal conditions and the system should be design in order to avoid any over-areation of the hydraulic fluid, to limit any air release at the inlet port.

Minimum reservoir capacity depends on the volume required to cool and hold the oil from all retracted cylinders, allowing for expansion due to temperature changes. A fluid volume of 1 to 3 times the pump output flow (per minute) is satisfactory. The minimum reservoir capacity is 125% of the fluid volume.

The suction line shall be installed above the bottom of the reservoir to take advantage of gravity separation and prevent large foreign particles from entering the line. Cover the line with a 100-125 micron screen. The pump should be below the lowest expected fluid level.

Put the return-line below the lowest expected fluid level to allow discharge into the reservoir for maximum dwell and efficient deaeration. A baffle (or baffles) between the return and suction lines promotes deaeration and reduces fluid surges.

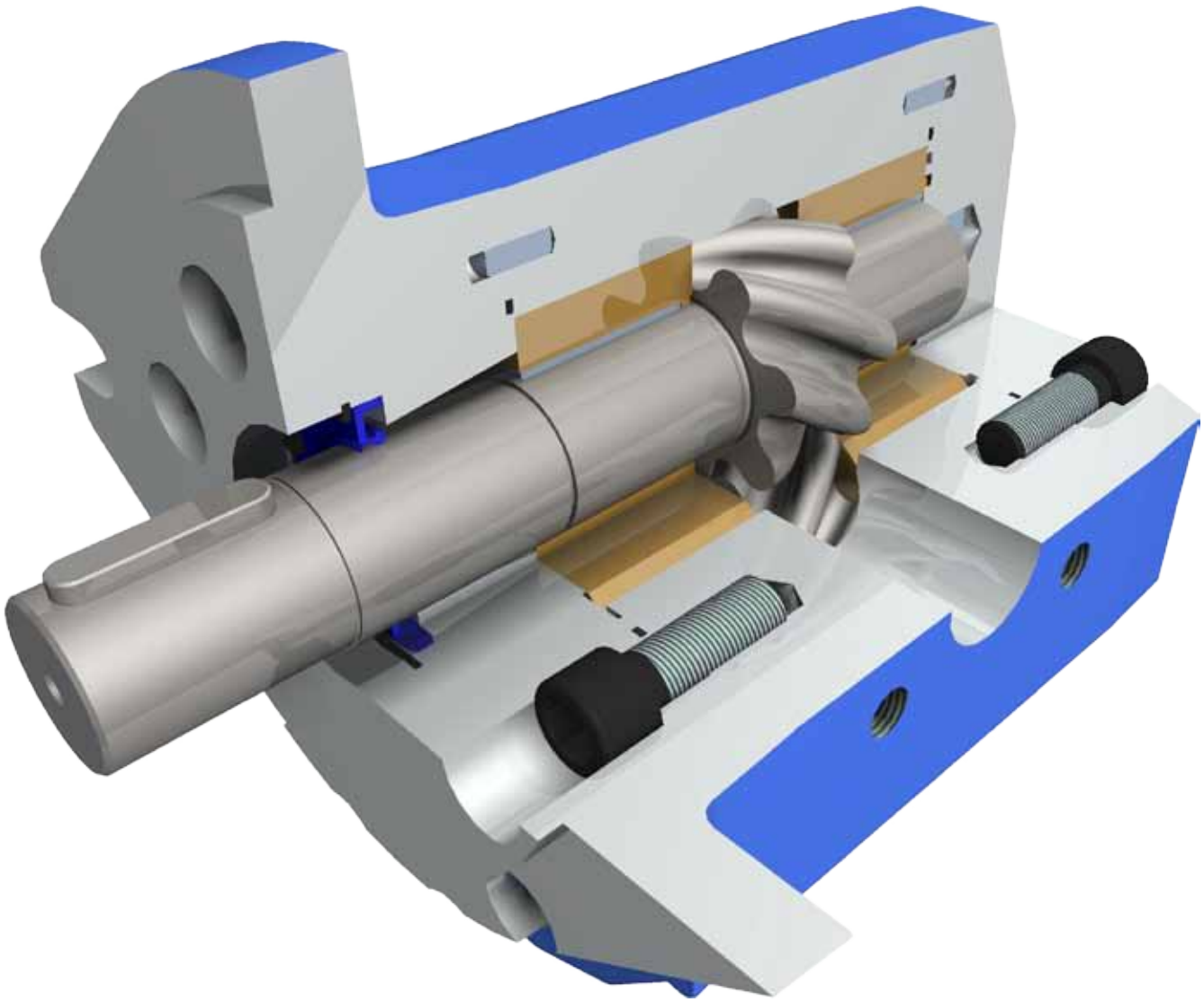

Pump drive

Shaft options for Continuum® pumps include tapered, tang, splined, or parallel shafts. They are suitable for a wide range of direct and indirect drive applications for radial and thrust loads.

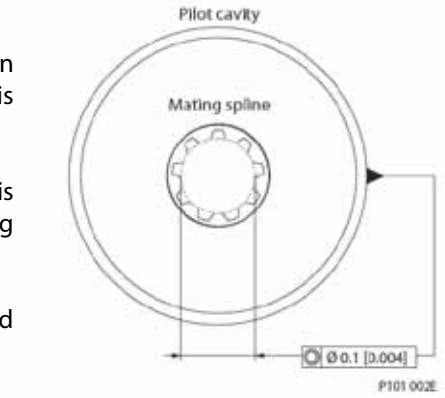

Plug-in drives, acceptable only with a splined shaft, can impose severe radial loads when the mating spline is rigidly supported. Increasing spline clearance does not alleviate this condition.

Use plug-in drives if the concentricity between the mating spline and pilot diameter is within 0.1 mm [0.004 in]. Lubricate the drive by flooding it with oil. A 3-piece coupling minimizes radial or thrust shaft loads.

In order to avoid spline shaft damages it is recommended to use carburized and hardened steel couplings with 60-62 HRC surface hardness.

Allowable **radial shaft loads** are a function of the load position, load orientation, and operating pressure of the hydraulic pump. All external shaft loads have an effect on bearing life, and may affect pump performance.

In applications where external shaft loads can't be avoided, minimize the impact on the pump by optimizing the orientation and magnitude of the load. Use a tapered input shaft; don't use splined shafts for belt or gear drive applications. A spring-loaded belt tension-device is recommended for belt drive applications to avoid excessive tension. Avoid thrust loads in either direction. Contact Settima if continuously applied external radial or thrust loads occur.

Pump life

Pump life is a function of speed, system pressure, and other system parameters (such as fluid quality and cleanliness).

All Continuum® pumps use hydrodynamic journal bearings that have an oil film maintained between the gear/shaft and bearing surfaces at all times. If the oil film is sufficiently sustained through proper system maintenance and operating within recommended limits, long life can be expected.

B10 life expectancy number is generally associated with rolling element bearings. It does not exist for hydrodynamic bearings.

High pressure, resulting from high loads, impacts pump life. When submitting an application for review, provide machine duty cycle data that includes percentages of time at various loads and speeds. We strongly recommend a prototype testing program to verify operating parameters and their impact on life expectancy before finalizing any system design.

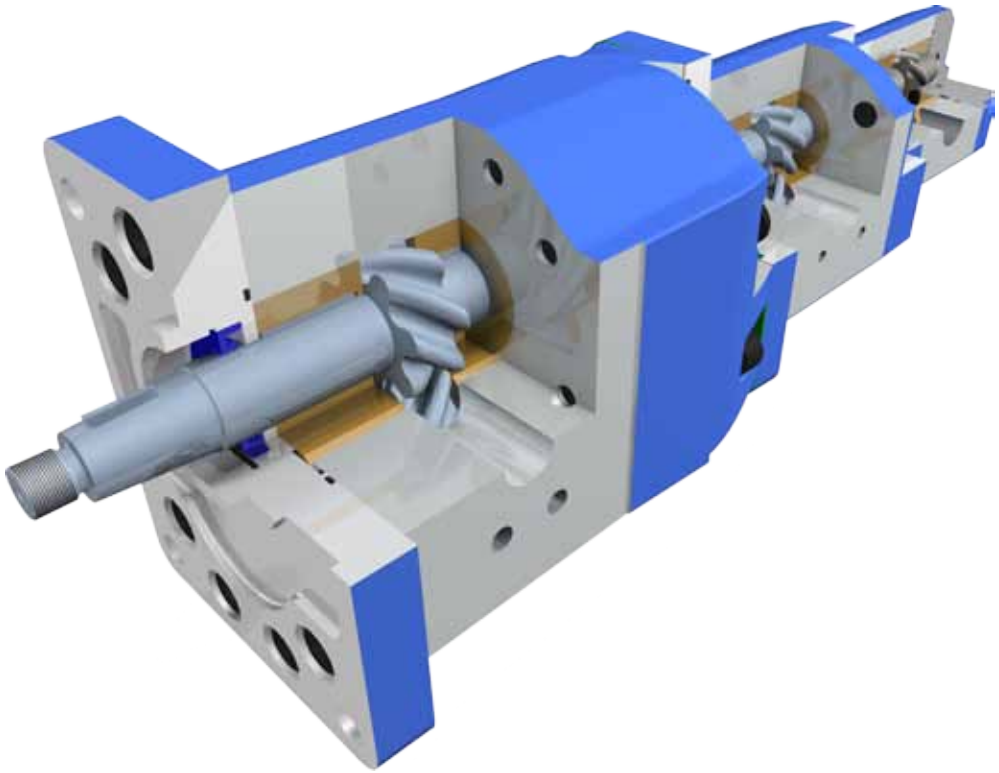

SETTIMA® research & innovation, always

Grampelhuber GmbH | www.grampelhuber.at
A-4810 Gmunden/Österreich
T: +43 (0)7612-64902-0 office@grampelhuber.at

Pump drive data form

Fill out this page and send the complete form to your Settima representative for an assistance in applying pumps with belt or gear drive. This illustration shows a pump with counterclockwise orientation:

Optimal radial load position

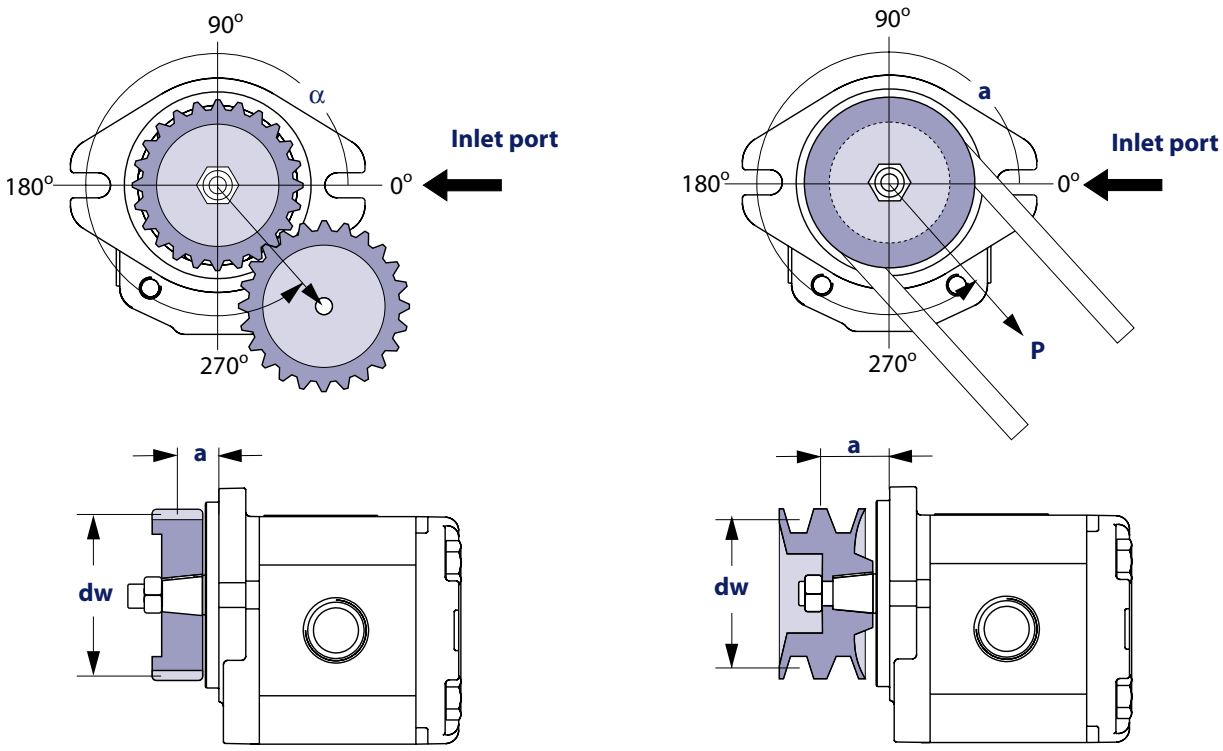

Application data

Item		Value	Unit
Pump displacement			cm^3/rev [in^3/rev]
Rated system pressure			☐ bar ☐ psi
Relief valve setting			
Pump shaft rotation			☐ left ☐ right
Pump minimum speed			min^{-1} (rpm)
Pump maximum speed			
Drive gear helix angle (gear drive only)			degree
Belt type (gear drive only)			☐ V ☐ notch
Belt tension (gear drive only)	**P**		☐ N ☐ lbf
Angular orientation of gear or belt to inlet port	α		degree
Pitch diameter of gear or pulley	$\mathbf{d_w}$		☐ mm ☐ in
Distance from flange to center of gear or pulley	**a**		

Product description / Descrizione prodotto

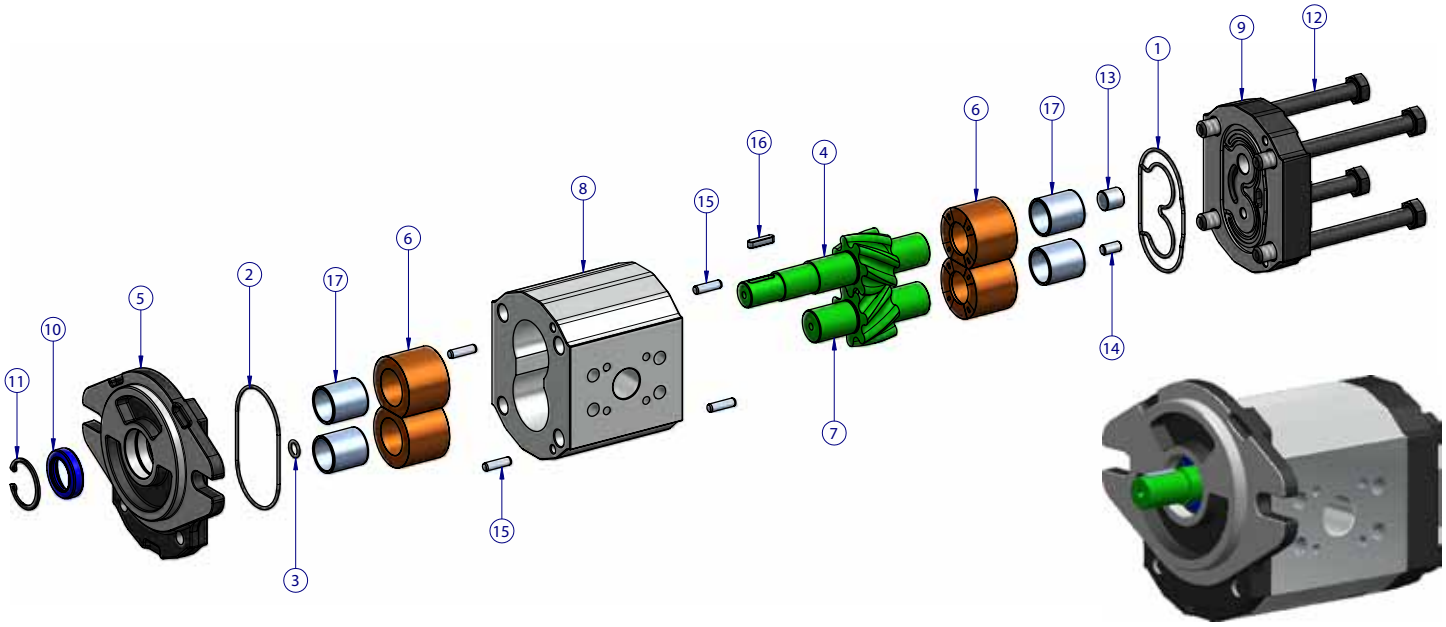

N°	DESCRIPTION/DESCRIZIONE	MATERIAL / MATERIALE
1	O-ring seal / O-ring	NBR
2	O-ring seal / O-ring	NBR
3	O-ring seal / O-ring	NBR
4	Driving Continuum® rotor / *Rotore guida Continuum®*	Hardened steel / *Acciaio temprato*
5	Motor flange / *Flangia motore*	Cast iron / *Ghisa*
6	Ring for bush / *Anello porta boccola*	Aluminium / *Alluminio*
7	Driven Continuum® rotor / *Rotore guidato Continuum®*	Hardened steel / *Acciaio temprato*
8	Body / *Corpo*	Extruded aluminum alloy / *Alluminio estruso*
9	Cover flange / *Flangia*	Cast iron / *Ghisa*
10	Seal / *Anello di tenuta*	NBR
11	Seeger / *Seeger*	Steel / *Acciaio*
12	Screws / *Viti di fissaggio*	Steel / *Acciaio*
13	Piston / *Pistone*	Steel / *Acciaio*
14	Piston / *Pistone*	Steel / *Acciaio*
15	Centring Keys / *Spine di centraggio*	Steel / *Acciaio*
17	Bushings / *Boccole*	Steel / *Acciaio*

Standard type and options

	STANDARD MATERIAL	OPTIONAL MATERIAL
Body / *Corpo*	Alluminium / *Alluminio*	Cast iron / *Ghisa*
Seal kit	NBR	FKM
Bushings / *Boccole*	Alluminium / *Alluminio*	Bronze / *Bronzo*

SETTIMA research & innovation, always

Grampelhuber GmbH | www.grampelhuber.at
A-4810 Gmunden/Österreich
T: +43 (0)7612-64902-0 office@grampelhuber.at

Ordering code / Codice ordine

Single pump / *Pompa singola*

Type *Tipo*	Class *Classe*	Displacement *Cilindrata*	Flange & shaft *Flangia & albero*	Ports *Porte*	Shaft seal *Guarnizione albero*	Rotation *Rotazione*
GR28	2V	004-006-008-010-013	F1AC3-F1PAC2-F1KAG54-F1LAGL54-FSAEAAC-F1KAGL54	G-U	Standard NBR **(none)**	Standard DX **(none)**
GR33	2C	010-013-015-018	F2AC4-F2BK7AG-FSAEAAC-FSAEAAT9	G-Q-U		
GR38	2C	016-018-020-022-025-028	F2AC4-F2BK7AG-FSAEAAC-FSAEAAT11-FSAEAAT9	G-Q-U		
GR47	2C	028-032-036-040-045-050	F3AC9-FSAEBAC-FSAEBAT13	G-O-U	Optional FKM **V**	Optional **SX***
GR55	2C	050-063-075-090	FSAEBAC-FSAEBAT15	O-OE		
GR72	2V	094-101-125-150-175-200-220	FSAEDAC-FSAEDAT23	ME		

* Please Contact Settima for SX counter clockwise optional rotation.
Contattare Settima per rotazione SX opzionale.

DIRECTION OF ROTATION / *SENSO DI ROTAZIONE*

Continuum® pumps are available with right rotation as standard configuration and left rotation as optional configuration. Right hand rotation means that, when standing in front of the pump, with driving shaft towards to the observer, the pump is rotating clockwise (DX). The other way around with left hand rotation, counter clockwise (SX).
Le pompe **Continuum®** *sono fornite con la configurazione standard di rotazione destra. Opzionale la rotazione sinistra. Con rotazione destra (DX) si intende che, guardando la pompa frontalmente, con l'albero conduttore sporgente verso il punto di osservazione, la rotazione sarà in senso orario, con il lato mandata sulla destra e il lato aspirazione sulla sinistra della pompa. Viceversa per quanto riguarda la rotazione sinistra (SX).*

Continuum® pumps, despite the type of configuration , can rotate to the opposite side if the pressure is not higher than 10% of maximum continuous pressure (check the Technical Characteristics table).
Le pompe **Continuum®***, qualunque configurazione di rotazione abbiano, possono ruotare in senso inverso a pressioni non superiore al 10% della massima pressione continua (verificare nella tabella delle caratteristiche tecniche).*

DX: Clockwise rotation / *Rotazione destra*

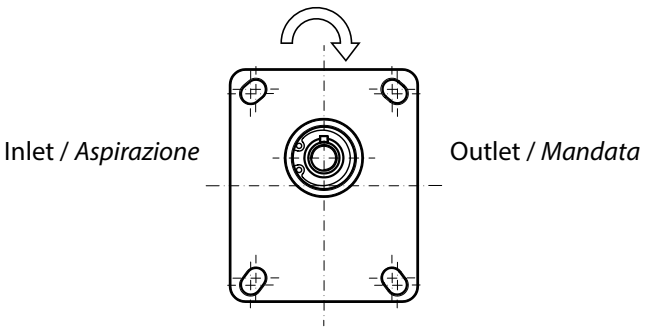

SX: Counter clockwise rotation / *Rotazione sinistra*

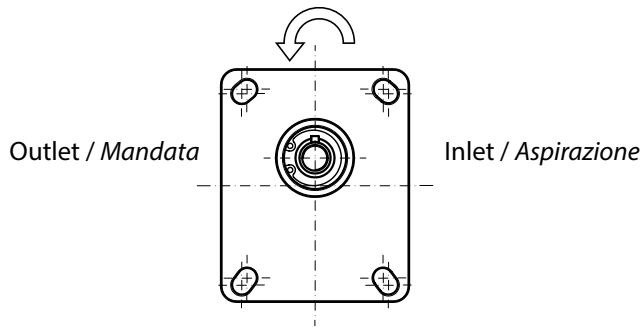

Variant codes for ordering integral relief valves*

The tables below detail the various codes for ordering integral relief valves.

R:

Code	Pump speed for RV setting
C	500 min^{-1} (rpm)
E	1000 min^{-1} (rpm)
F	1250 min^{-1} (rpm)
G	1500 min^{-1} (rpm)
K	2000 min^{-1} (rpm)
I	2250 min^{-1} (rpm)
L	2500 min^{-1} (rpm)
M	2800 min^{-1} (rpm)
N	3000 min^{-1} (rpm)
O	3250 min^{-1} (rpm)

Code	Pressure setting
18	18 bar [261 psi]
30	30 bar [435 psi]
40	40 bar [580 psi]
50	50 bar [725 psi]
60	60 bar [870 psi]
70	70 bar [1015 psi]
80	80 bar [1160 psi]
90	90 bar [1305 psi]
100	100 bar [1450 psi]
120	120 bar [1740 psi]
140	140 bar [2030 psi]
160	160 bar [2320 psi]
180	180 bar [2611 psi]
210	210 bar [3046 psi]
250	250 bar [3626 psi]

Integral relief valve schematic

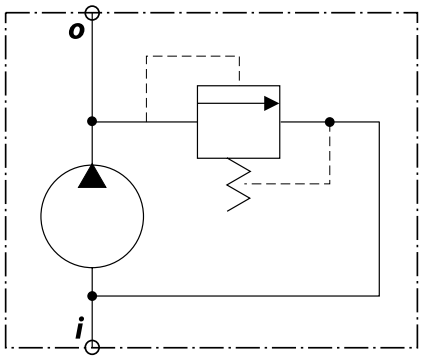

* Please, contact Settima for this option.

Grampelhuber GmbH | www.grampelhuber.at
A-4810 Gmunden/Österreich
T: +43 (0)7612-64902-0 office@grampelhuber.at

GR28 - Dimensional drawings / Disegni dimensionali

GR28 SHAFT AND FLANGE TYPES AND DIMENSIONS / *TIPI DI ALBERO E FLANGIA E DIMENSIONI*

Group 1 pumps / *Pompe gruppo 1*

Type	Class	Flange & Shaft available types	Ports	Weight
GR28	2V	F1 AC3	G-U	2 Kg
		F1 AC3 with safety valve		
		F1P AC2		
		F1K AG54		
		F1K AGL54		
		F1K AGL54 with safety valve		
		FSAEAA AC		
		FSAEAA AC with safety valve		
		F1L AGL54		
		F1L AG54		

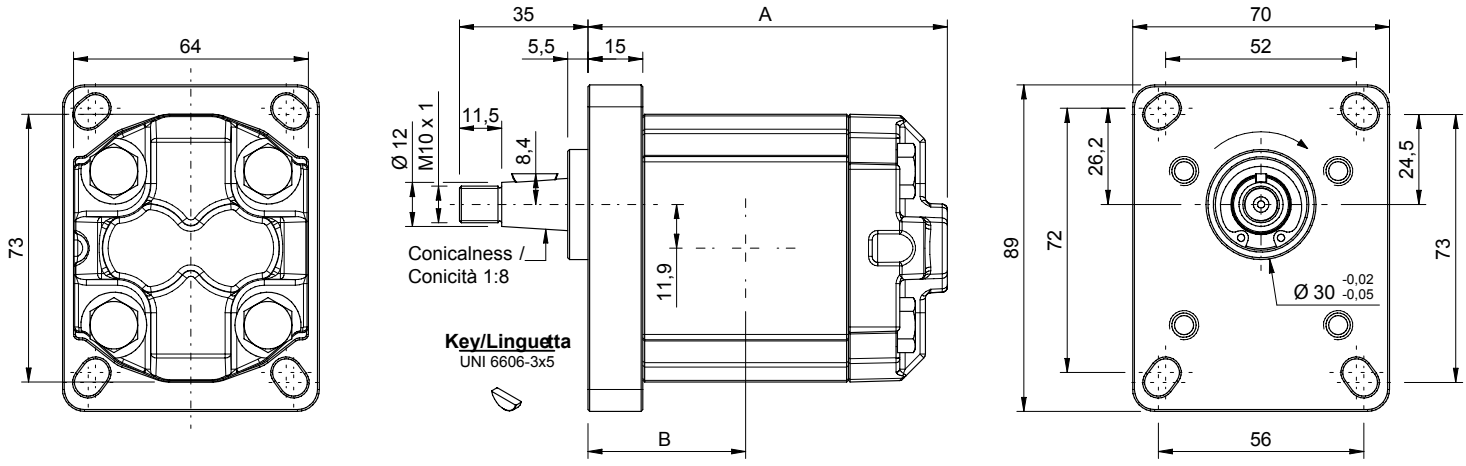

GR28 - TYPE / *TIPO* F1 AC3								
Type *Tipo*	**CC**	**L/min**	**Dimensions A** *Dimensioni A*	**Dimensions B** *Dimensioni B*	**Continuous Pressure** *Pressione continua*	**Intermittent Pressure** *Pressione intermittente* (*)	**Peak pressure** *Picco pressione (*)*	**Noise level** *Livello rumore*
4	4,2	6	101	44,5	275	280	300	55
6	6,4	9,2	106,5	47,3	275	280	300	55
8	8,3	12	111,5	49,8	246	260	280	55
10	10,2	14,7	116,5	52,3	222	250	270	55
13	12,9	18,6	123,4	55,7	176	230	250	55

Max torque / *Coppia max:* 100 Nm

* Intermittent: cycle 20 sec. ON & 3 sec. OFF - Peak: cycle 1 sec. ON & 3 sec OFF. Intermittente: ciclo 20 sec. ON & 3 sec. OFF - Picco: ciclo 1 sec. ON & 3 sec OFF

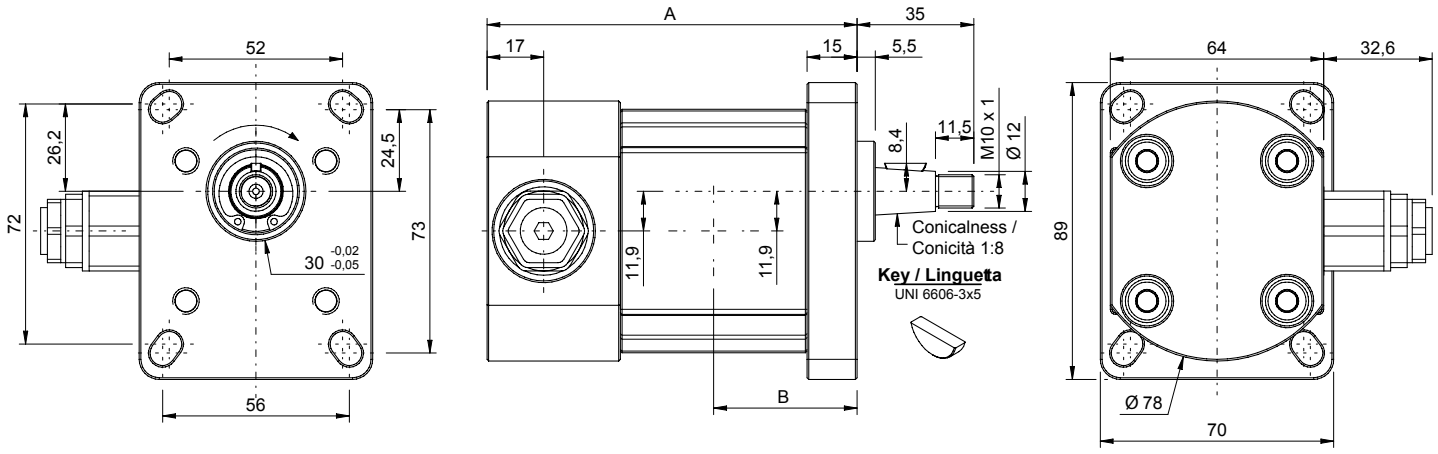

GR28 - TYPE / *TIPO* F1 AC3 (with safety valve/*con valvola di massima*)								
Type ***Tipo***	**CC**	**L/min**	**Dimensions A** ***Dimensioni A***	**Dimensions B** ***Dimensioni B***	**Continuous Pressure** ***Pressione continua***	**Intermittent Pressure** ***Pressione intermittente*** **(*)**	**Peak pressure** ***Picco pressione (*)***	**Noise level** ***Livello rumore***
4	4,2	6	114	44,5	275	280	300	55
6	6,4	9,2	119,5	47,3	275	280	300	55
8	8,3	12	124,5	49,8	246	260	280	55
10	10,2	14,7	129,5	52,3	222	250	270	55
13	12,9	18,6	136,4	55,7	176	230	250	55

Max torque / *Coppia max:* 100 Nm

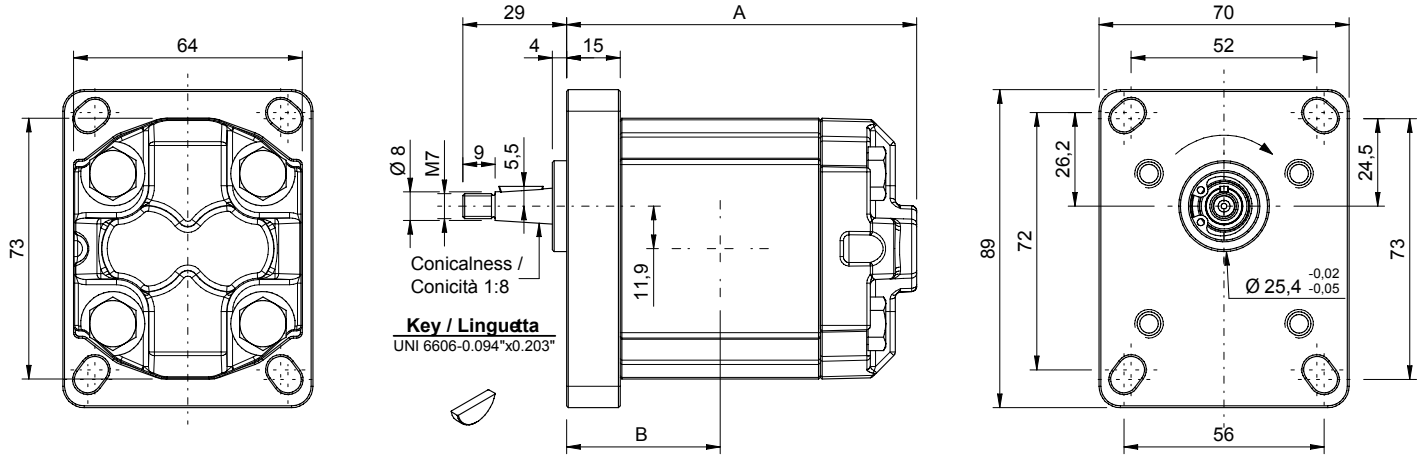

GR28 - TYPE / *TIPO* F1P AC2								
Type ***Tipo***	**CC**	**L/min**	**Dimensions A** ***Dimensioni A***	**Dimensions B** ***Dimensioni B***	**Continuous Pressure** ***Pressione continua***	**Intermittent Pressure** ***Pressione intermittente*** **(*)**	**Peak pressure** ***Picco pressione (*)***	**Noise level** ***Livello rumore***
4	4,2	6,0	101	44,5	240	260	280	55
6	6,4	9,2	106,5	47,3	230	240	270	55
8	8,3	12	111,5	49,8	200	210	220	55
10	10,2	14,7	116,5	52,3	160	170	180	55
13	12,9	18,6	123,4	55,7	140	150	160	55

Max torque / *Coppia max:* 50 Nm

* Intermittent: cycle 20 sec. ON & 3 sec. OFF - Peak: cycle 1 sec. ON & 3 sec OFF. Intermittente: ciclo 20 sec. ON & 3 sec. OFF - Picco: ciclo 1 sec. ON & 3 sec OFF

SETTIMA® research & innovation, always

Grampelhuber GmbH | www.grampelhuber.at
A-4810 Gmunden/Österreich
T: +43 (0)7612-64902-0 office@grampelhuber.at

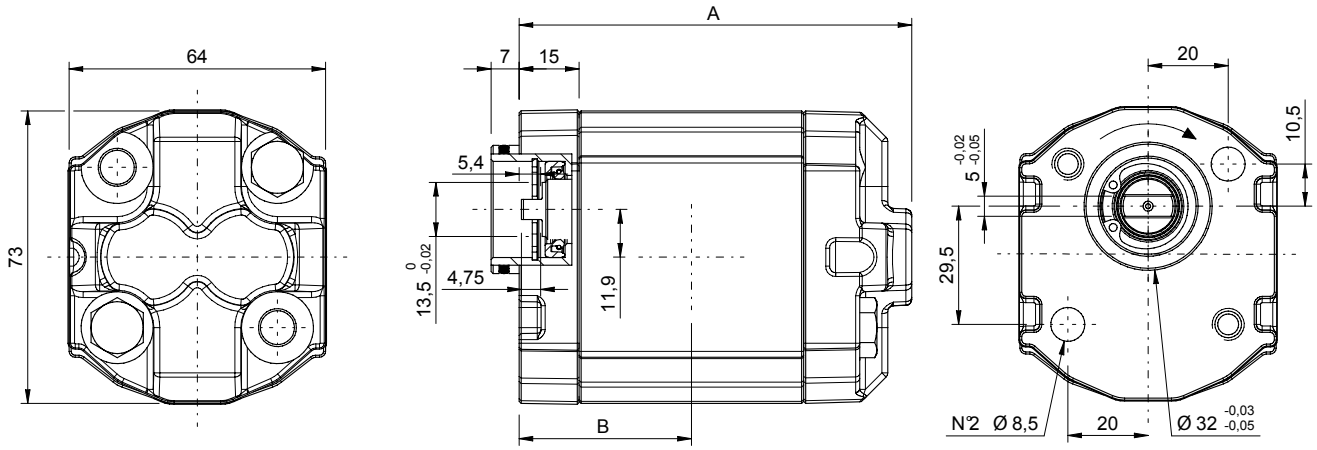

GR28 - TYPE / *TIPO* F1K AG54								
Type ***Tipo***	**CC**	**L/min**	**Dimensions A** ***Dimensioni A***	**Dimensions B** ***Dimensioni B***	**Continuous Pressure** ***Pressione continua***	**Intermittent Pressure** ***Pressione intermittente*** **(*)**	**Peak pressure** ***Picco pressione (*)***	**Noise level** ***Livello rumore***
4	4,2	6	101	44,5	275	280	300	55
6	6,4	9,2	106,5	47,3	230	240	270	55
8	8,3	12	111,5	49,8	180	200	210	55
10	10,2	14,7	116,5	52,3	150	160	170	55
13	12,9	18,6	123,4	55,7	120	130	140	55

Max torque / *Coppia max:* 40 Nm

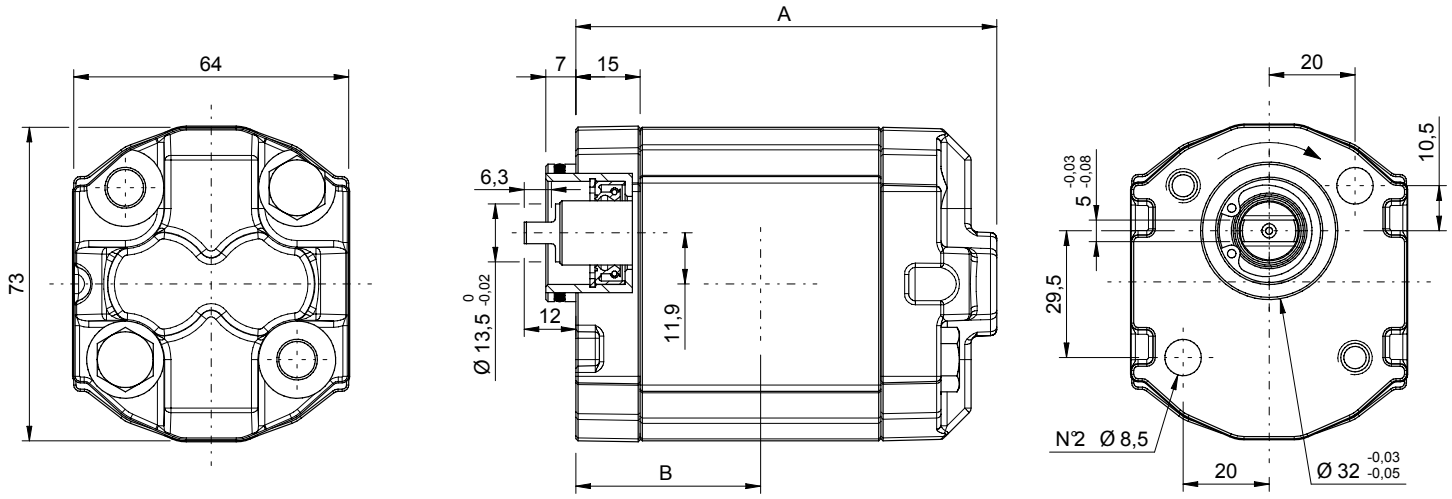

GR28 - TYPE / *TIPO* F1K AGL54								
Type ***Tipo***	**CC**	**L/min**	**Dimensions A** ***Dimensioni A***	**Dimensions B** ***Dimensioni B***	**Continuous Pressure** ***Pressione continua***	**Intermittent Pressure** ***Pressione intermittente*** **(*)**	**Peak pressure** ***Picco pressione (*)***	**Noise level** ***Livello rumore***
4	4,2	6	101	44,5	275	280	300	55
6	6,4	9,2	106,5	47,3	260	275	290	55
8	8,3	12	111,5	49,8	230	240	250	55
10	10,2	14,7	116,5	52,3	180	190	200	55
13	12,9	18,6	123,4	55,7	150	160	170	55

Max torque / *Coppia max:* 50 Nm

* Intermittent: cycle 20 sec. ON & 3 sec. OFF - Peak: cycle 1 sec. ON & 3 sec OFF. Intermittente: ciclo 20 sec. ON & 3 sec. OFF - Picco: ciclo 1 sec. ON & 3 sec OFF

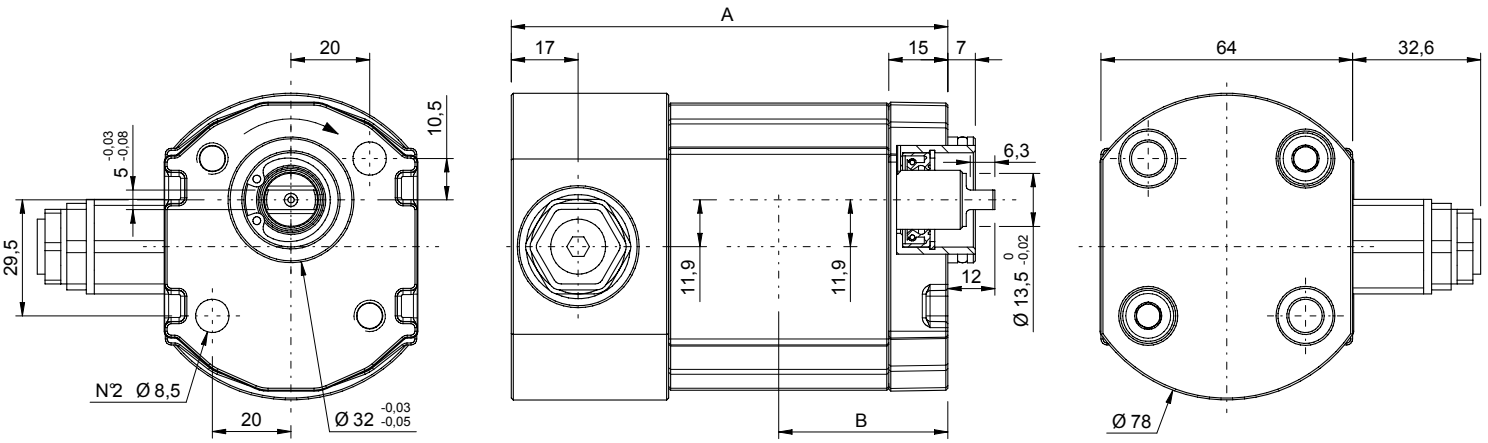

GR28 - TYPE / *TIPO* F1K AGL54 (with safety valve / *con valvola di massima*)								
Type *Tipo*	**CC**	**L/min**	**Dimensions A** *Dimensioni A*	**Dimensions B** *Dimensioni B*	**Continuous Pressure** *Pressione continua*	**Intermittent Pressure** *Pressione intermittente* (*)	**Peak pressure** *Picco pressione (*)*	**Noise level** *Livello rumore*
4	4,2	6	114	44,5	275	280	300	55
6	6,4	9,2	119,5	47,3	260	275	290	55
8	8,3	12	124,5	49,8	230	240	250	55
10	10,2	14,7	129,5	52,3	180	190	200	55
13	12,9	18,6	136,4	55,7	150	160	170	55

Max torque / *Coppia max:* 50 Nm

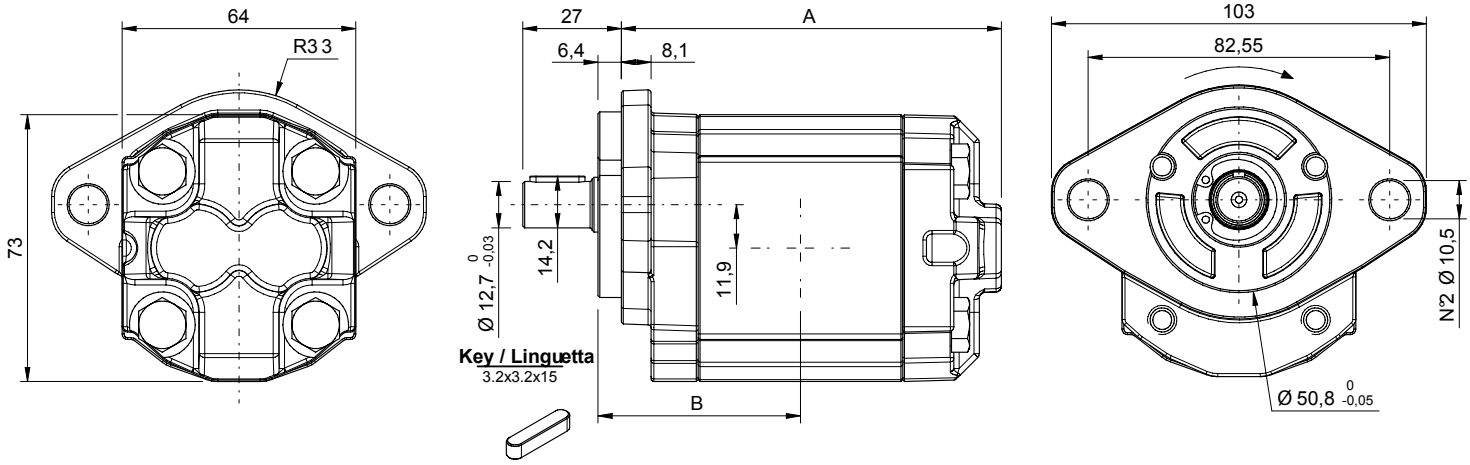

GR28 - TYPE / *TIPO* FSAEAA AC								
Type *Tipo*	**CC**	**L/min**	**Dimensions A** *Dimensioni A*	**Dimensions B** *Dimensioni B*	**Continuous Pressure** *Pressione continua*	**Intermittent Pressure** *Pressione intermittente* (*)	**Peak pressure** *Picco pressione (*)*	**Noise level** *Livello rumore*
4	4,2	6	107	50,5	234	238	255	55
6	6,4	9,2	112,5	53,3	234	238	255	55
8	8,3	12	117,5	55,8	209	221	238	55
10	10,2	14,7	122,5	58,3	189	213	230	55
13	12,9	18,6	129,4	61,7	170	196	213	55

Max torque / *Coppia max:* 60 Nm

* Intermittent: cycle 20 sec. ON & 3 sec. OFF - Peak: cycle 1 sec. ON & 3 sec OFF. Intermittente: ciclo 20 sec. ON & 3 sec. OFF - Picco: ciclo 1 sec. ON & 3 sec OFF

SETTIMA® research & innovation, always

Grampelhuber GmbH | www.grampelhuber.at
A-4810 Gmunden/Österreich
T: +43 (0)7612-64902-0 office@grampelhuber.at

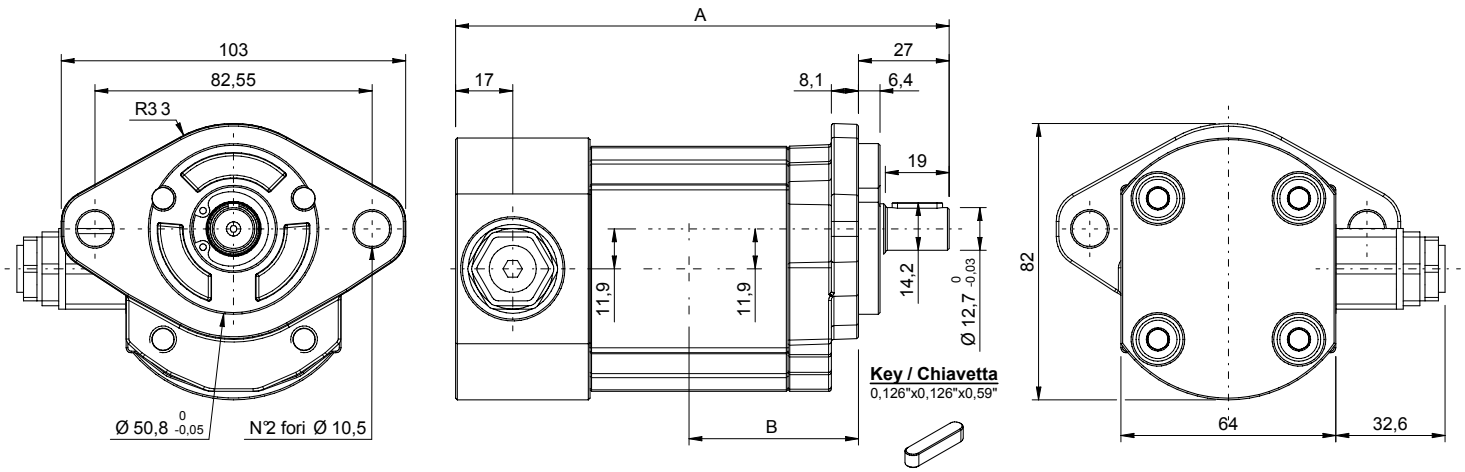

GR28 - TYPE / *TIPO* FSAEAA AC (with safety valve/*con valvola di massima*)								
Type ***Tipo***	**CC**	**L/min**	**Dimensions A** ***Dimensioni A***	**Dimensions B** ***Dimensioni B***	**Continuous Pressure** ***Pressione continua***	**Intermittent Pressure** ***Pressione intermittente*** (*)	**Peak pressure** ***Picco pressione (*)***	**Noise level** ***Livello rumore***
4	4,2	6	120	50,5	234	238	255	55
6	6,4	9,2	125,5	53,3	234	238	255	55
8	8,3	12	130,5	55,8	209	221	238	55
10	10,2	14,7	135,5	58,3	189	213	230	55
13	12,9	18,6	142,4	61,7	170	196	213	55

Max torque / *Coppia max:* 60 Nm

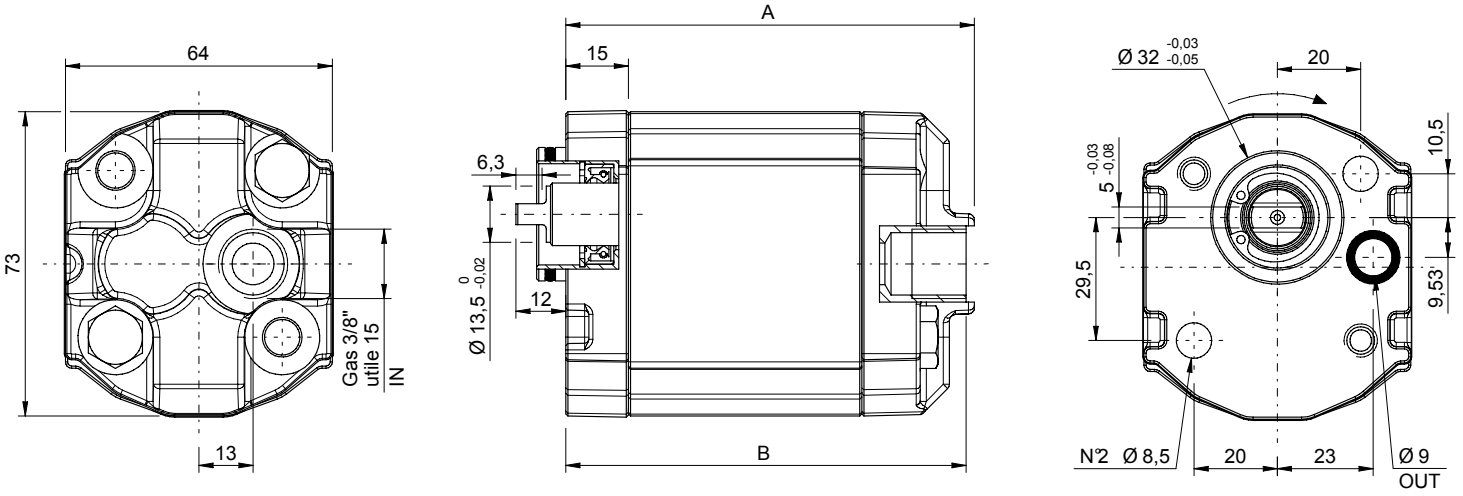

GR28 - TYPE / *TIPO* F1L AGL54								
Type ***Tipo***	**CC**	**L/ min**	**Dimensions A** ***Dimensioni A***	**Dimensions B** ***Dimensioni B***	**Continuous Pressure** ***Pressione continua***	**Intermittent Pressure** ***Pressione intermittente*** (*)	**Peak pressure** ***Picco pressione (*)***	**Noise level** ***Livello rumore***
4	4,2	6	101	99	275	280	300	55
6	6,4	9,2	106,5	104,5	260	275	290	55
8	8,3	12	111,5	109,5	230	240	250	55
10	10,2	14,7	116,5	114,5	180	190	200	55
13	12,9	18,6	123,4	121,4	150	160	170	55

Max torque / *Coppia max:* 50 Nm

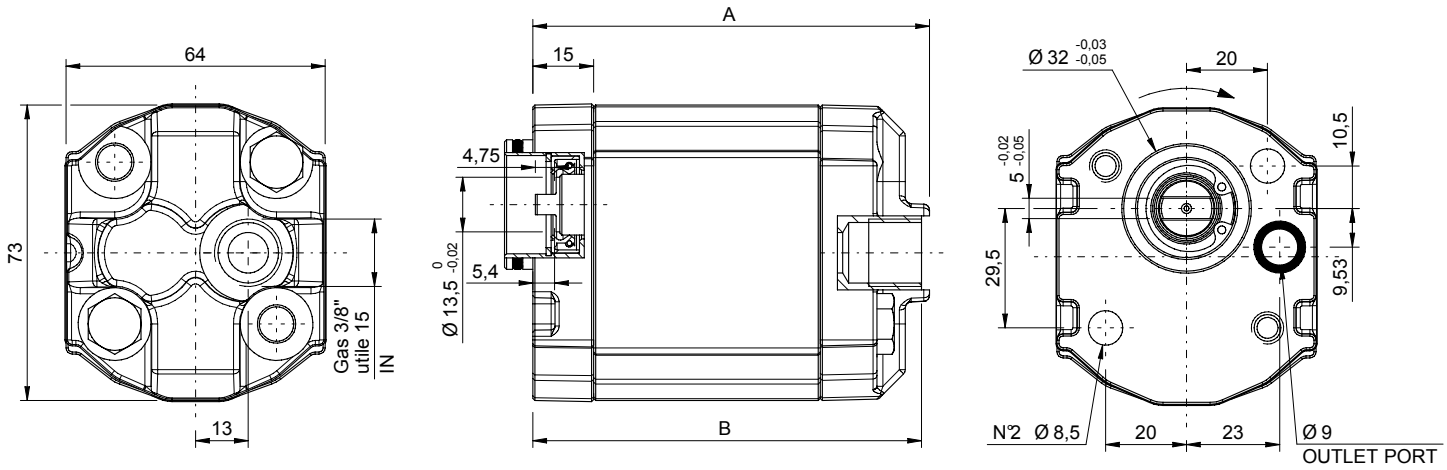

GR28 - TYPE / *TIPO* F1L AG54								
Type *Tipo*	**CC**	**L/ min**	**Dimensions A** *Dimensioni A*	**Dimensions B** *Dimensioni B*	**Continuous Pressure** *Pressione continua*	**Intermittent Pressure** *Pressione intermittente* (*)	**Peak pressure** *Picco pressione (*)*	**Noise level** *Livello rumore*
4	4,2	6	101	99	275	280	300	55
6	6,4	9,2	106,5	104,5	260	275	290	55
8	8,3	12	111,5	109,5	230	240	250	55
10	10,2	14,7	116,5	114,5	180	190	200	55
13	12,9	18,6	123,4	121,4	150	160	170	55

Max torque / *Coppia max:* 40 Nm

* Intermittent: cycle 20 sec. ON & 3 sec. OFF - Peak: cycle 1 sec. ON & 3 sec OFF. Intermittente: ciclo 20 sec. ON & 3 sec. OFF - Picco: ciclo 1 sec. ON & 3 sec OFF

INLET AND OUTLET PORTS / *PORTE DI ASPIRAZIONE E MANDATA* (Suction / Pressure)

Type G / *Tipo G*

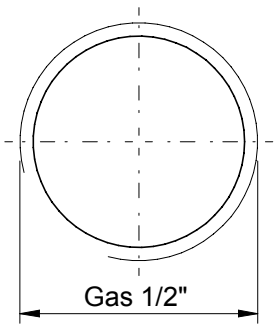

Type U / *Tipo U*

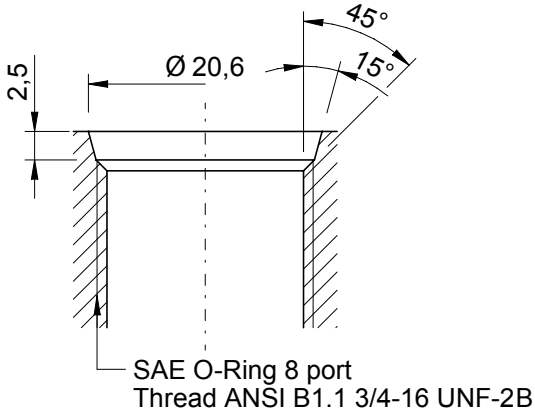

SETTIMA research & innovation, always
Grampelhuber GmbH | www.grampelhuber.at
A-4810 Gmunden/Österreich
T: +43 (0)7612-64902-0 office@grampelhuber.at

GR33 - Dimensional drawings / Disegni dimensionali

GR33 SHAFT AND FLANGE TYPES AND DIMENSIONS / *TIPI DI ALBERO E FLANGIA E DIMENSIONI*

Group 2 pumps / *Pompe gruppo 2*

Type	Class	Flange & Shaft available types	Ports	Weight
GR33	2C	F2 AC4	Q-G-U	5 Kg
		F2BK7 AG		
		FSAEA AC		
		FSAEA AT9		

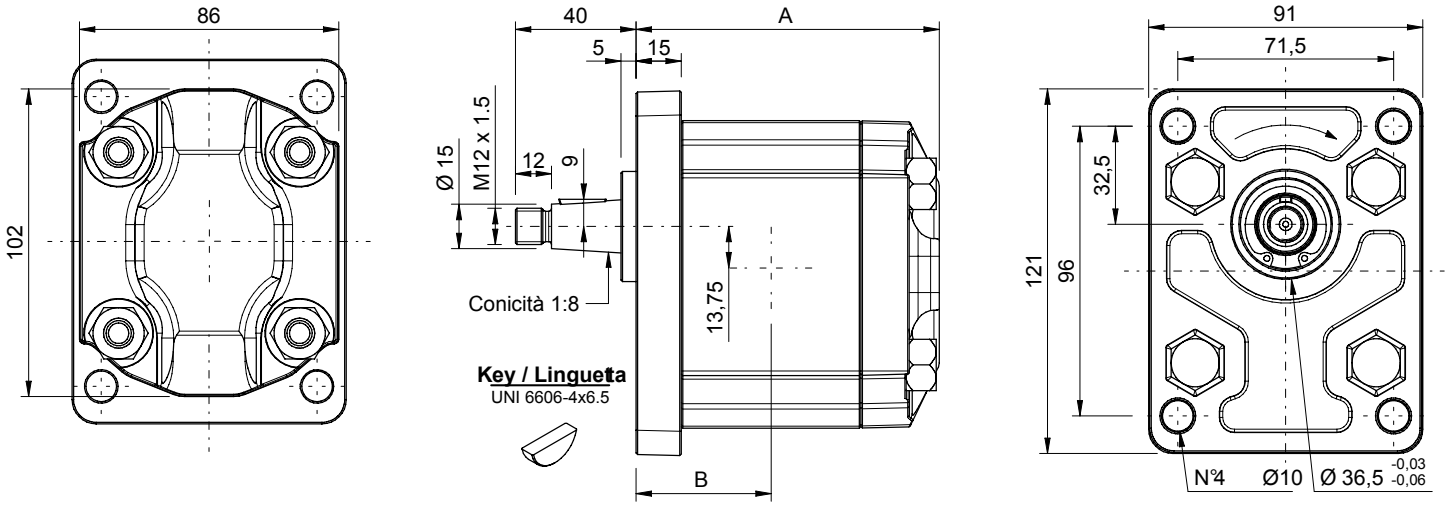

GR33 - TYPE / *TIPO* F2 AC4								
Type *Tipo*	**CC**	**L/min**	**Dimensions A** *Dimensioni A*	**Dimensions B** *Dimensioni B*	**Continuous Pressure** *Pressione continua*	**Intermittent Pressure** *Pressione intermittente* (*)	**Peak pressure** *Picco pressione (*)*	**Noise level** *Livello rumore*
10	10,1	14,5	104,5	46,8	275	280	300	55
13	12,6	18,1	109,4	49,2	265	270	290	55
15	15,2	21,8	114,4	51,7	241	250	270	55
18	18,2	26,1	120,2	54,6	206	250	270	55

Max torque / *Coppia max:* 210 Nm

* Intermittent: cycle 20 sec. ON & 3 sec. OFF - Peak: cycle 1 sec. ON & 3 sec OFF. Intermittente: ciclo 20 sec. ON & 3 sec. OFF - Picco: ciclo 1 sec. ON & 3 sec OFF

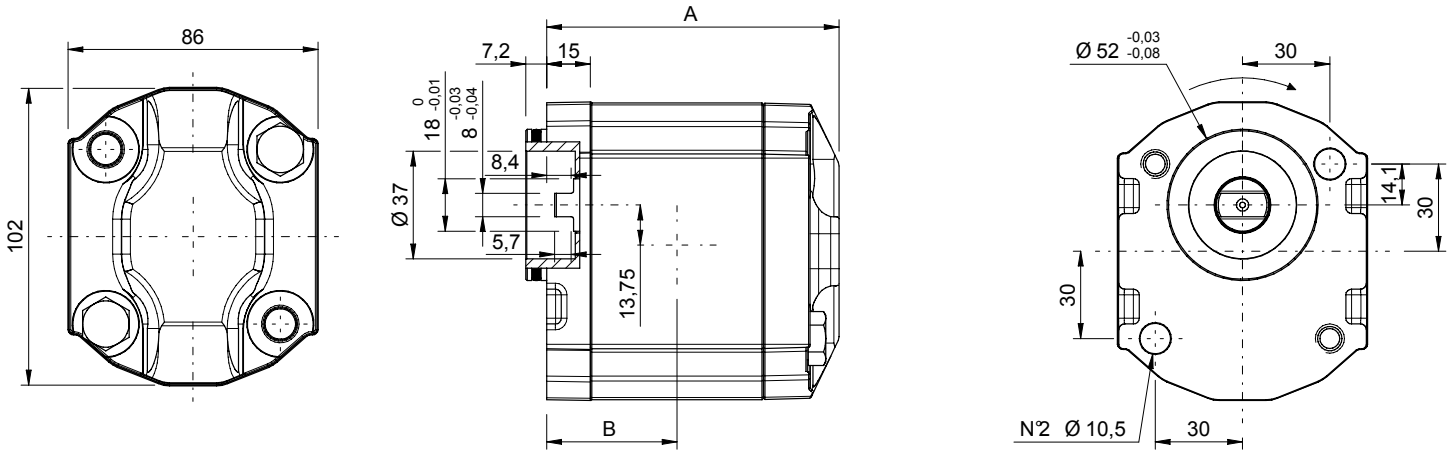

GR33 - TYPE / *TIPO* F2BK7 AG								
Type ***Tipo***	**CC**	**L/min**	**Dimensions A** ***Dimensioni A***	**Dimensions B** ***Dimensioni B***	**Continuous Pressure** ***Pressione continua***	**Intermittent Pressure** ***Pressione intermittente*** **(*)**	**Peak pressure** ***Picco pressione (*)***	**Noise level** ***Livello rumore***
10	10,1	14,5	104,5	46,8	275	280	300	55
13	12,6	18,1	109,4	49,2	265	270	290	55
15	15,2	21,8	114,4	51,7	241	250	270	55
18	18,2	26,1	120,2	54,6	206	250	270	55

Max torque / *Coppia max:* 110 Nm

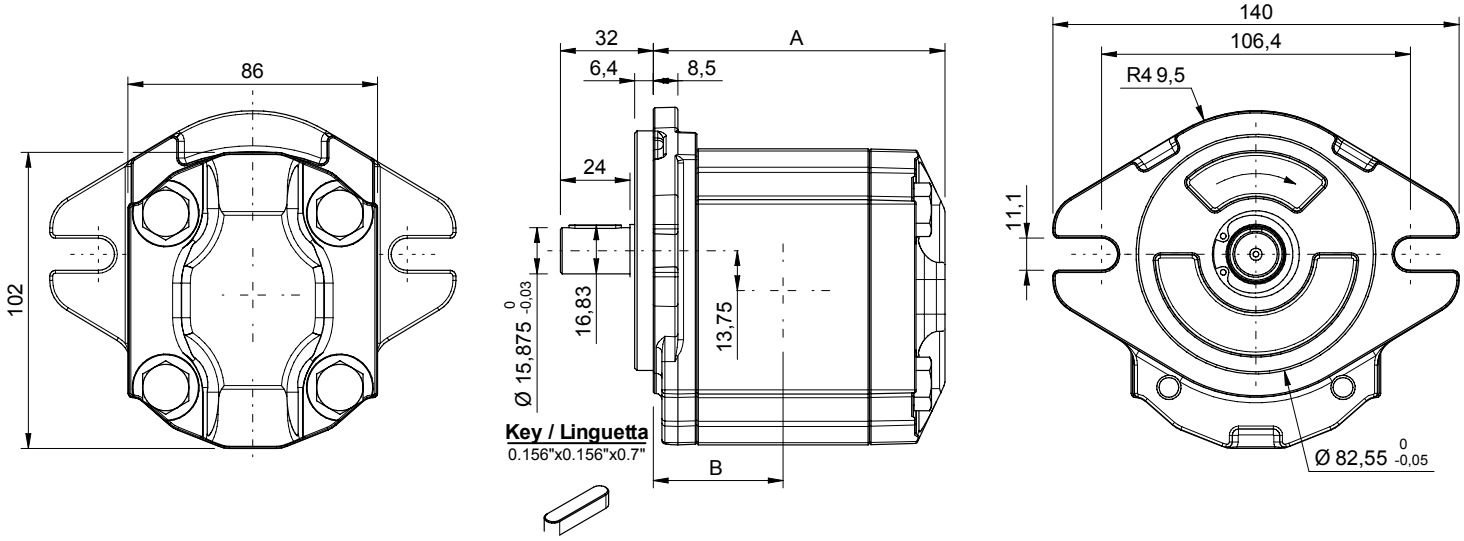

GR33 - TYPE / *TIPO* FSAEA AC								
Type ***Tipo***	**CC**	**L/min**	**Dimensions A** ***Dimensioni A***	**Dimensions B** ***Dimensioni B***	**Continuous Pressure** ***Pressione continua***	**Intermittent Pressure** ***Pressione intermittente*** **(*)**	**Peak pressure** ***Picco pressione (*)***	**Noise level** ***Livello rumore***
10	10,1	14,5	104,5	46,8	275	280	300	55
13	12,6	18,1	109,4	49,2	265	270	290	55
15	15,2	21,8	114,4	51,7	241	250	270	55
18	18,2	26,1	120,2	54,6	206	250	270	55

Max torque / *Coppia max:* 140 Nm

* Intermittent: cycle 20 sec. ON & 3 sec. OFF - Peak: cycle 1 sec. ON & 3 sec OFF. Intermittente: ciclo 20 sec. ON & 3 sec. OFF - Picco: ciclo 1 sec. ON & 3 sec OFF

SETTIMA research & innovation, always
Grampelhuber GmbH | www.grampelhuber.at
A-4810 Gmunden/Österreich
T: +43 (0)7612-64902-0 office@grampelhuber.at

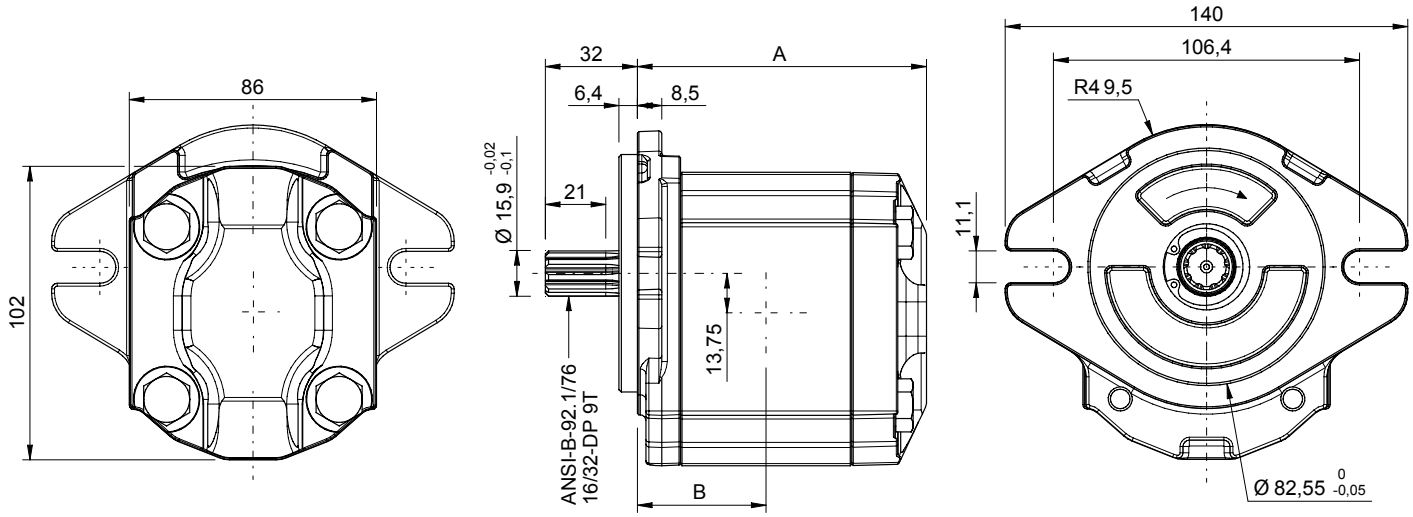

GR33 - TYPE / *TIPO* FSAEA AT9								
Type ***Tipo***	**CC**	**L/min**	**Dimensions A** ***Dimensioni A***	**Dimensions B** ***Dimensioni B***	**Continuous Pressure** ***Pressione continua***	**Intermittent Pressure** ***Pressione intermittente*** (*)	**Peak pressure** ***Picco pressione (*)***	**Noise level** ***Livello rumore***
10	10,1	14,5	104,5	46,8	275	280	300	55
13	12,6	18,1	109,4	49,2	265	270	290	55
15	15,2	21,8	114,4	51,7	241	250	270	55
18	18,2	26,1	120,2	54,6	206	250	270	55

Max torque / *Coppia max:* 190 Nm

* Intermittent: cycle 20 sec. ON & 3 sec. OFF - Peak: cycle 1 sec. ON & 3 sec OFF. Intermittente: ciclo 20 sec. ON & 3 sec. OFF - Picco: ciclo 1 sec. ON & 3 sec OFF

INLET OUTLET PORTS / *PORTE DI ASPIRAZIONE E MANDATA* (Suction / Pressure)

Type G / *Tipo G*

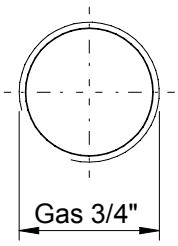

Type Q / *Tipo Q*

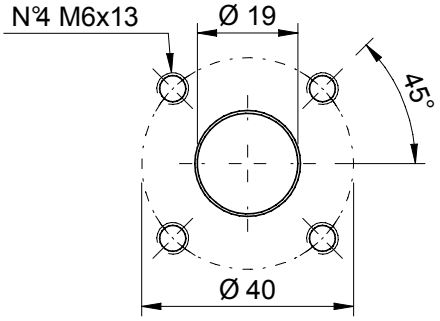

UNF INLET OUTLET PORTS / *PORTE DI ASPIRAZIONE E MANDATA UNF* - **Type U / *Tipo U***

SAE O-Ring port 10 thread

ANSI B1.1 1 7/8 14 UNF-2B

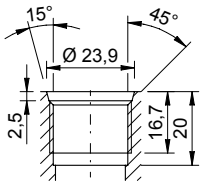

SAE O-Ring port 12 thread

ANSI B1.1 1 1/16 UN-2B

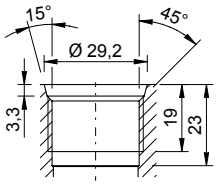

SAE O-Ring port 16 thread

ANSI B1.1 1 5/16 UN-2B

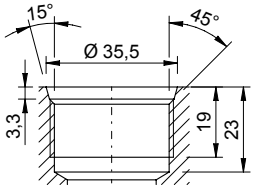

Suction/Pressure UNF ports possible configuration

Possibili combinazioni porte di aspirazione/ mandata di tipo UNF

Pump	Suction port	Pressure port
10 cc	SAE O-Ring port 12	SAE O-Ring port 10
13 cc	SAE O-Ring port 12	SAE O-Ring port 10
15 cc	SAE O-Ring port 12	SAE O-Ring port 10
18 cc	SAE O-Ring port 16	SAE O-Ring port 12

GR38 - Dimensional drawings / Disegni dimensionali

GR38 SHAFT AND FLANGE TYPES AND DIMENSIONS / *TIPI DI ALBERO E FLANGIA E DIMENSIONI*

Group 2 pumps / *Pompe gruppo 2*

Type	Class	Flange & Shaft available types	Ports	Weight
GR38	2C	F2 AC4	Q-G-U	6 Kg
		F2BK7 AG		
		FSAEA AC		
		FSAEA AT9		
		FSAEA AT11		

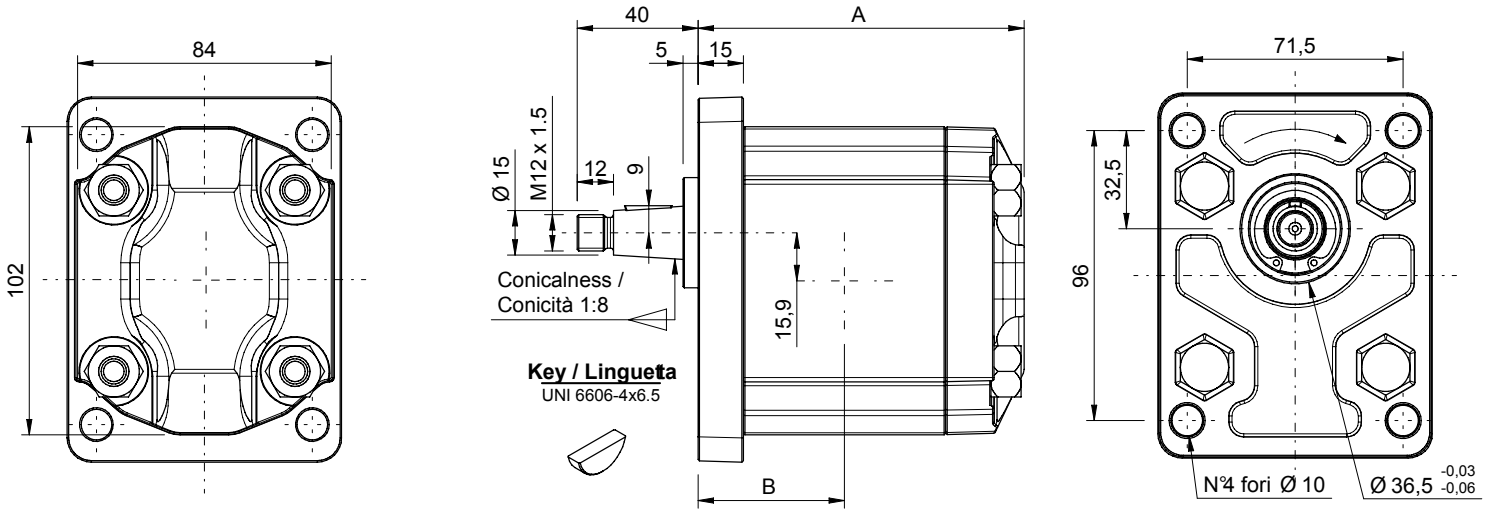

GR38 - TYPE / *TIPO* F2 AC4								
Type *Tipo*	CC	L/min	Dimensions A *Dimensioni A*	Dimensions B *Dimensioni B*	Continuous Pressure *Pressione continua*	Intermittent Pressure *Pressione intermittente* (*)	Peak pressure *Picco pressione (*)*	Noise level *Livello rumore*
16	15,9	22,8	108	48,5	265	280	300	55
18	17,9	25,8	111	50	247	260	280	55
20	20	28,8	114	51,5	230	250	270	55
22	22,1	31,8	117	53	222	240	260	55
25	25,2	36,2	121,5	55,3	200	210	220	55
28	28,3	40,7	126	57,5	180	190	200	55

Max torque / *Coppia max:* 210 Nm

* Intermittent: cycle 20 sec. ON & 3 sec. OFF - Peak: cycle 1 sec. ON & 3 sec OFF. Intermittente: ciclo 20 sec. ON & 3 sec. OFF - Picco: ciclo 1 sec. ON & 3 sec OFF

SETTIMA research & innovation, always

Grampelhuber GmbH | www.grampelhuber.at
A-4810 Gmunden/Österreich
T: +43 (0)7612-64902-0 office@grampelhuber.at

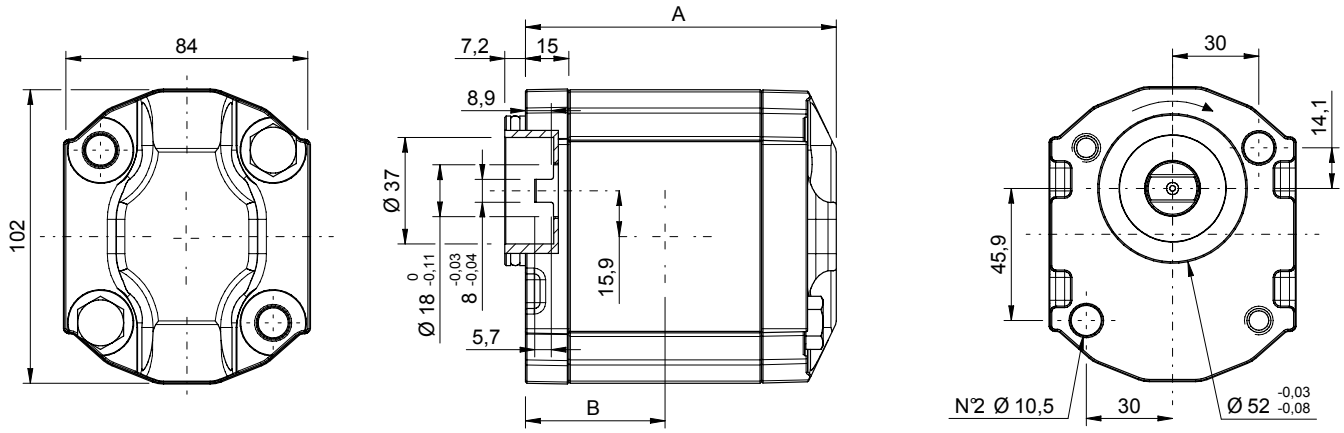

GR38 - TYPE / *TIPO* F2BK7 AG								
Type ***Tipo***	**CC**	**L/min**	**Dimensions A** ***Dimensioni A***	**Dimensions B** ***Dimensioni B***	**Continuous Pressure** ***Pressione continua***	**Intermittent Pressure** ***Pressione intermittente*** **(*)**	**Peak pressure** ***Picco pressione (*)***	**Noise level** ***Livello rumore***
16	15,9	22,8	108	48,5	265	280	300	55
18	17,9	25,8	111	50	247	260	280	55
20	20	28,8	114	51,5	230	250	260	55
22	22,1	31,8	117	53	210	230	240	55
25	25,2	36,2	121,5	55,3	200	210	220	55
28	28,3	40,7	126	57,5	180	190	200	55

Max torque / *Coppia max:* 110 Nm

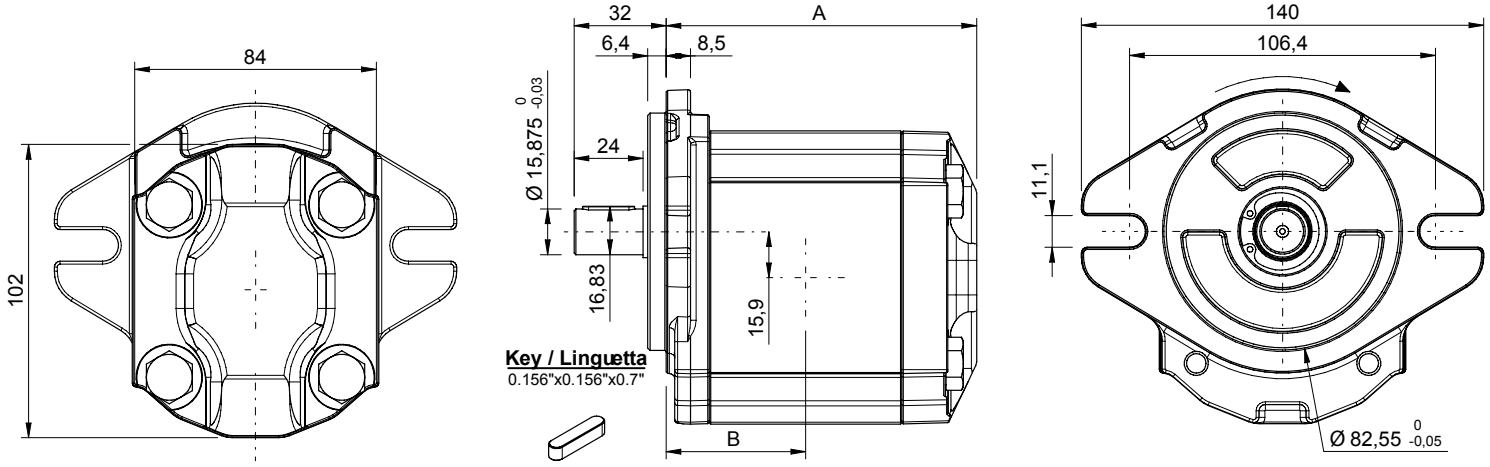

GR38 - TYPE / *TIPO* FSAEA AC								
Type ***Tipo***	**CC**	**L/min**	**Dimensions A** ***Dimensioni A***	**Dimensions B** ***Dimensioni B***	**Continuous Pressure** ***Pressione continua***	**Intermittent Pressure** ***Pressione intermittente*** **(*)**	**Peak pressure** ***Picco pressione (*)***	**Noise level** ***Livello rumore***
16	15,9	22,8	108	48,5	265	280	300	55
18	17,9	25,8	111	50	247	260	280	55
20	20	28,8	114	51,5	230	250	270	55
22	22,1	31,8	117	53	222	240	260	55
25	25,2	36,2	121,5	55,3	200	210	220	55
28	28,3	40,7	126	57,5	180	190	200	55

Max torque / *Coppia max:* 140 Nm

* Intermittent: cycle 20 sec. ON & 3 sec. OFF - Peak: cycle 1 sec. ON & 3 sec OFF. Intermittente: ciclo 20 sec. ON & 3 sec. OFF - Picco: ciclo 1 sec. ON & 3 sec OFF

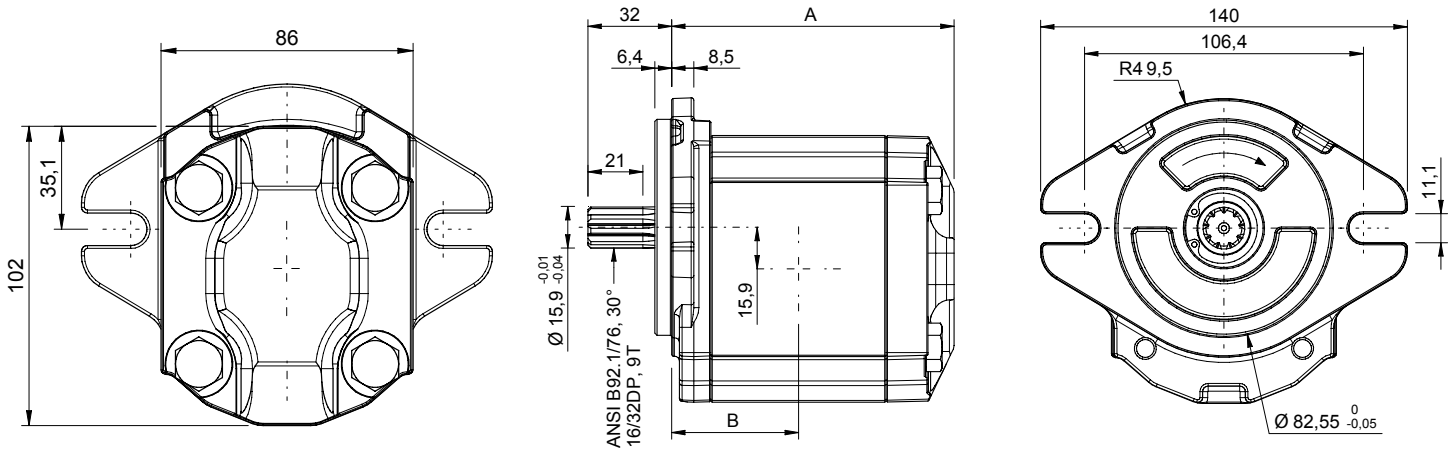

GR38 - TYPE / *TIPO* FSAEA AT9								
Type ***Tipo***	**CC**	**L/min**	**Dimensions A** ***Dimensioni A***	**Dimensions B** ***Dimensioni B***	**Continuous Pressure** ***Pressione continua***	**Intermittent Pressure** ***Pressione intermittente*** **(*)**	**Peak pressure** ***Picco pressione (*)***	**Noise level** ***Livello rumore***
16	15,9	22,8	108	48,5	265	280	300	55
18	17,9	25,8	111	50	247	260	280	55
20	20	28,8	114	51,5	230	250	270	55
22	22,1	31,8	117	53	222	240	260	55
25	25,2	36,2	121,5	55,3	200	210	220	55
28	28,3	40,7	126	57,5	180	190	200	55

Max torque / *Coppia max:* 190 Nm

* Intermittent: cycle 20 sec. ON & 3 sec. OFF - Peak: cycle 1 sec. ON & 3 sec OFF. Intermittente: ciclo 20 sec. ON & 3 sec. OFF - Picco: ciclo 1 sec. ON & 3 sec OFF

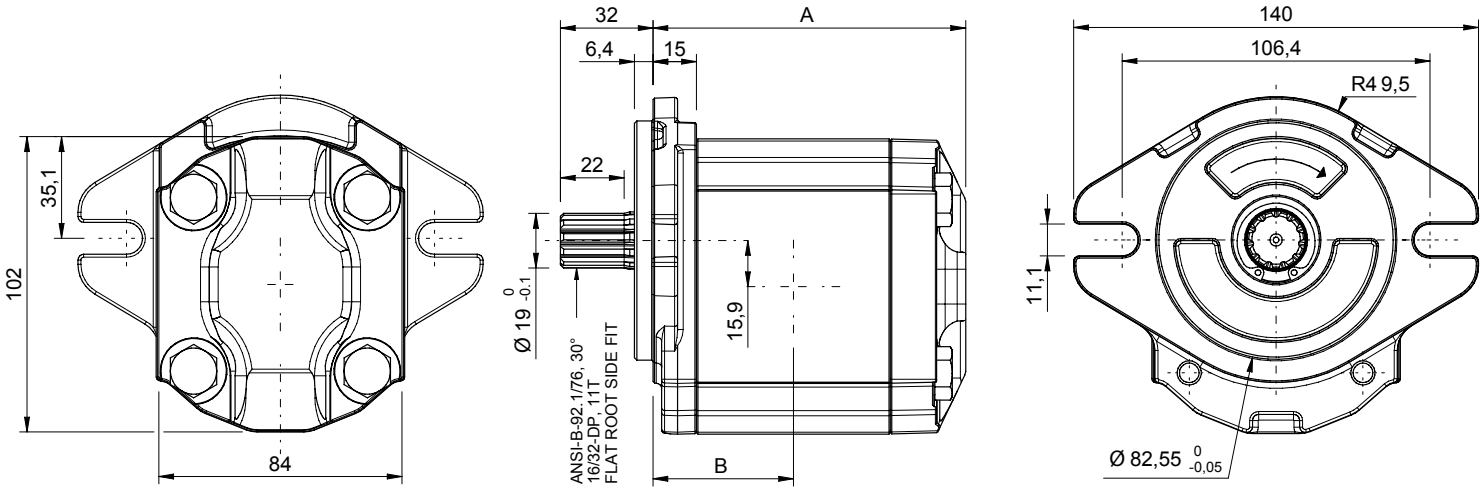

GR38 - TYPE / *TIPO* FSAEA AT11								
Type ***Tipo***	**CC**	**L/min**	**Dimensions A** ***Dimensioni A***	**Dimensions B** ***Dimensioni B***	**Continuous Pressure** ***Pressione continua***	**Intermittent Pressure** ***Pressione intermittente*** **(*)**	**Peak pressure** ***Picco pressione (*)***	**Noise level** ***Livello rumore***
16	15,9	22,8	108	48,5	265	280	300	55
18	17,9	25,8	111	50	247	260	280	55
20	20	28,8	114	51,5	230	250	270	55
22	22,1	31,8	117	53	222	250	270	55
25	25,2	36,2	121,5	55,3	208	250	270	55
28	28,3	40,7	126	57,5	197	250	270	55

Max torque / *Coppia max:* 210 Nm

* Intermittent: cycle 20 sec. ON & 3 sec. OFF - Peak: cycle 1 sec. ON & 3 sec OFF. Intermittente: ciclo 20 sec. ON & 3 sec. OFF - Picco: ciclo 1 sec. ON & 3 sec OFF

SETTIMA research & innovation, always

Grampelhuber GmbH | www.grampelhuber.at
A-4810 Gmunden/Österreich
T: +43 (0)7612-64902-0 office@grampelhuber.at

INLET OUTLET PORTS / *PORTE DI ASPIRAZIONE E MANDATA* (Suction / Pressure)

Type G / *Tipo G*

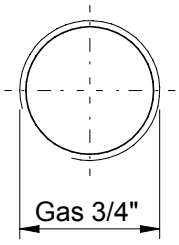

Type Q / *Tipo Q*

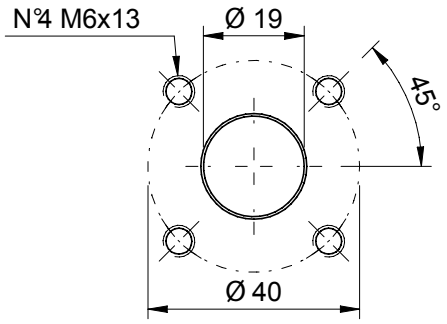

UNF INLET OUTLET PORTS / *PORTE DI ASPIRAZIONE E MANDATA UNF* - **Type U / *Tipo U***

Suction port type U

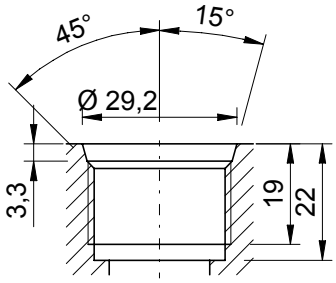

SAE O-Ring Port 12 thread
ANSI B1.1 1 1/16 UN-2B

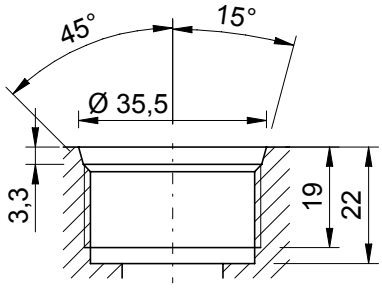

SAE O-Ring Port 16 thread
ANSI B1.1 1 5/16 12UN-2B

Pressure port type U

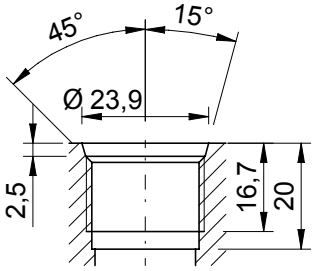

SAE O-Ring Port 10 thread
ANSI B1.1 1 7/8 14 UNF-2B

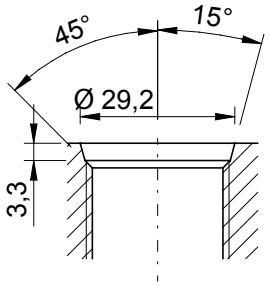

SAE O-Ring Port 12 thread
ANSI B1.1 1 1/16 UN-2B

Suction/Pressure UNF ports possible configuration
Possibili combinazioni porte di aspirazione/mandata di tipo UNF

Pump	Suction port	Pressure port
16 cc	SAE O-Ring port 12	SAE O-Ring port 10
18 cc	SAE O-Ring port 16	SAE O-Ring port 12
20 cc	SAE O-Ring port 16	SAE O-Ring port 12
22 cc	SAE O-Ring port 16	SAE O-Ring port 12
25 cc	SAE O-Ring port 16	SAE O-Ring port 12
28 cc	SAE O-Ring port 16	SAE O-Ring port 12

GR47 - Dimensional drawings / Disegni dimensionali

GR47 SHAFT AND FLANGE TYPES AND DIMENSIONS / *TIPI DI ALBERO E FLANGIA E DIMENSIONI*

Group 3 pumps / *Pompe gruppo 3*

Type	Class	Flange & Shaft available types	Ports	Weight
GR47	2C	F3 AC9	G-O-U	10 Kg
		FSAEB AC		
		FSAEB AT13		

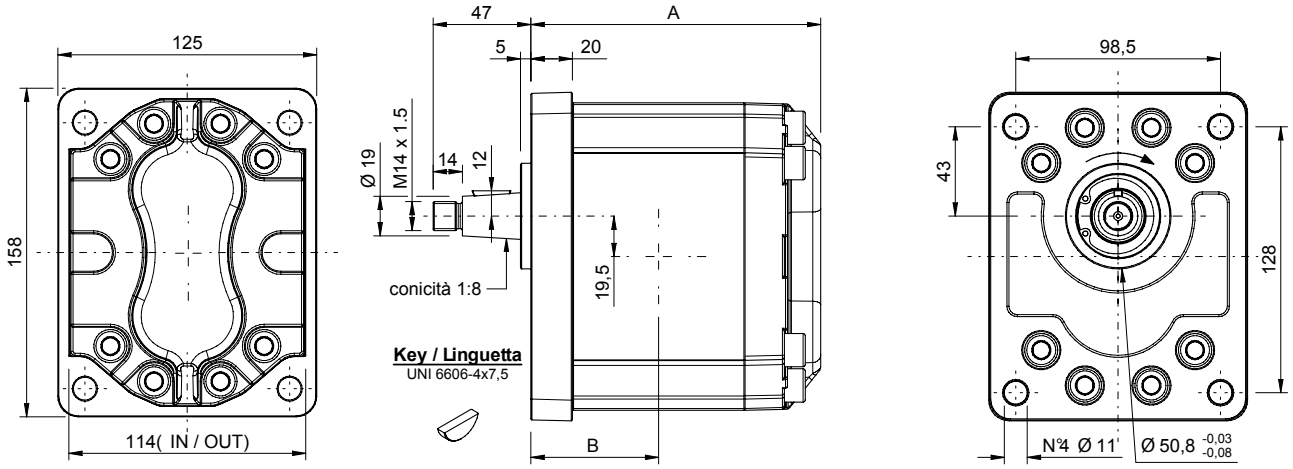

GR47 - TYPE / *TIPO* F3 AC9								
Type *Tipo*	**CC**	**L/min**	**Dimensions A** *Dimensioni A*	**Dimensions B** *Dimensioni B*	**Continuous Pressure** *Pressione continua*	**Intermittent Pressure** *Pressione intermittente* (*)	**Peak pressure** *Picco pressione (*)*	**Noise level** *Livello rumore*
28	28,0	40,3	139,5	61,5	270	280	300	57
32	32,2	46,3	143,5	63,5	252	270	280	57
36	36,3	52,3	147,5	65,5	239	250	270	57
40	40,5	58,3	151,5	67,5	225	250	270	57
45	45,5	65,0	156	69,8	213	250	270	57
50	50,3	72,4	161	72,3	202	250	270	57

Max torque / *Coppia max:* 320 Nm

* Intermittent: cycle 20 sec. ON & 3 sec. OFF - Peak: cycle 1 sec. ON & 3 sec OFF. Intermittente: ciclo 20 sec. ON & 3 sec. OFF - Picco: ciclo 1 sec. ON & 3 sec OFF

SETTIMA research & innovation, always

Grampelhuber GmbH | www.grampelhuber.at
A-4810 Gmunden/Österreich
T: +43 (0)7612-64902-0 office@grampelhuber.at

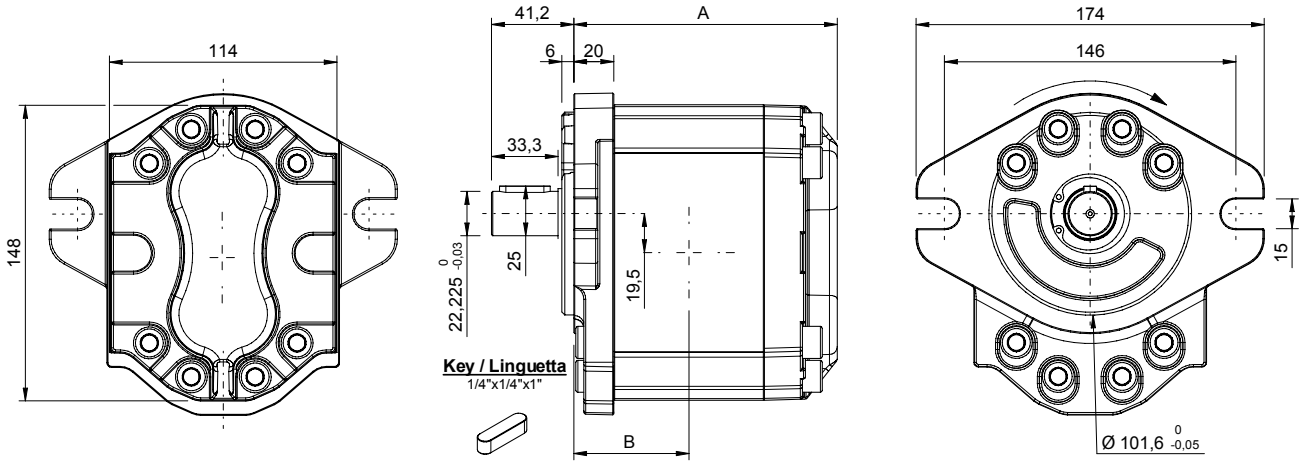

GR47 - TYPE / *TIPO* FSAEB AC								
Type ***Tipo***	**CC**	**L/min**	**Dimensions A** ***Dimensioni A***	**Dimensions B** ***Dimensioni B***	**Continuous Pressure** ***Pressione continua***	**Intermittent Pressure** ***Pressione intermittente*** **(*)**	**Peak pressure** ***Picco pressione (*)***	**Noise level** ***Livello rumore***
28	28,0	40,3	139,5	61,5	270	280	300	57
32	32,2	46,3	143,5	63,5	252	270	280	57
36	36,3	52,3	147,5	65,5	239	250	270	57
40	40,5	58,3	151,5	67,5	225	250	270	57
45	45,5	65,0	156	69,8	213	250	270	57
50	50,3	72,4	161	72,3	202	250	270	57

Max torque / *Coppia max:* 450 Nm - Max torque / *Coppia max:* 600 Nm

* Intermittent: cycle 20 sec. ON & 3 sec. OFF - Peak: cycle 1 sec. ON & 3 sec OFF. Intermittente: ciclo 20 sec. ON & 3 sec. OFF - Picco: ciclo 1 sec. ON & 3 sec OFF

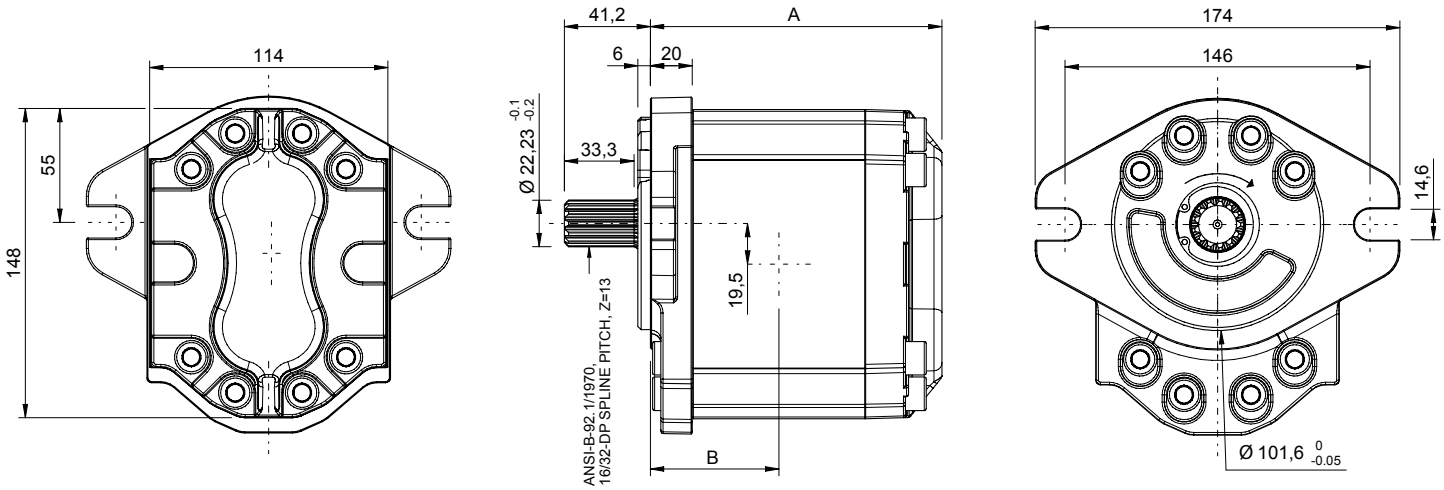

GR47 - TYPE / *TIPO* FSAEB AT13								
Type ***Tipo***	**CC**	**L/min**	**Dimensions A** ***Dimensioni A***	**Dimensions B** ***Dimensioni B***	**Continuous Pressure** ***Pressione continua***	**Intermittent Pressure** ***Pressione intermittente*** **(*)**	**Peak pressure** ***Picco pressione (*)***	**Noise level** ***Livello rumore***
28	28,0	40,3	139,5	61,5	270	280	300	57
32	32,2	46,3	143,5	63,5	252	270	280	57
36	36,3	52,3	147,5	65,5	239	250	270	57
40	40,5	58,3	151,5	67,5	225	250	270	57
45	45,5	65,0	156	69,8	213	250	270	57
50	50,3	72,4	161	72,3	202	250	270	57

Max torque / *Coppia max:* 450 Nm - Max torque / *Coppia max:* 600 Nm

* Intermittent: cycle 20 sec. ON & 3 sec. OFF - Peak: cycle 1 sec. ON & 3 sec OFF. Intermittente: ciclo 20 sec. ON & 3 sec. OFF - Picco: ciclo 1 sec. ON & 3 sec OFF

Suction port
Type "U"

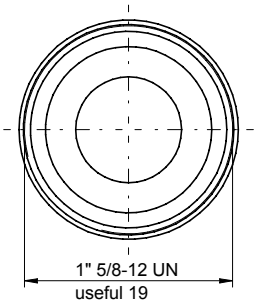

Pressure port
Type "U"

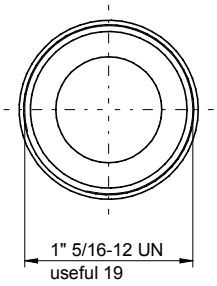

Suction port
Type "G"

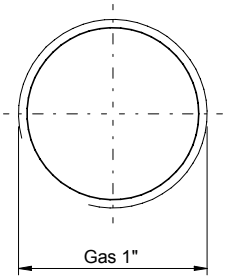

Pressure port
Type "G"

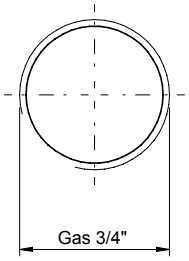

Suction port
Type "O"

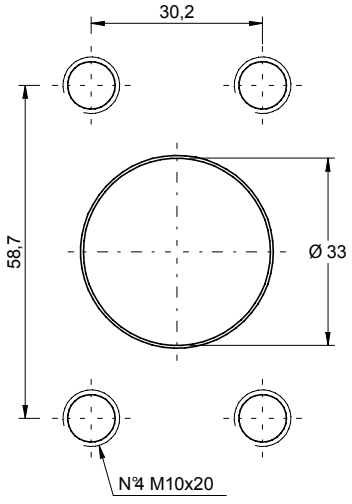

Pressure port
Type "O"

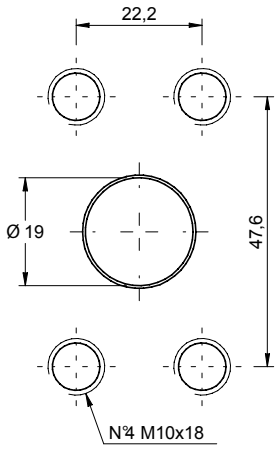

Grampelhuber GmbH | www.grampelhuber.at
A-4810 Gmunden/Österreich
T: +43 (0)7612-64902-0 office@grampelhuber.at

GR55 - Dimensional drawings / Disegni dimensionali

GR55 SHAFT AND FLANGE TYPES AND DIMENSIONS / *TIPI DI ALBERO E FLANGIA E DIMENSIONI*

Group 3 pumps / *Pompe gruppo 3*

Type	Class	Flange & Shaft available types	Ports	Weight
GR55	2C	FSAEB AC FSAEB AT15	O-OE	15 Kg

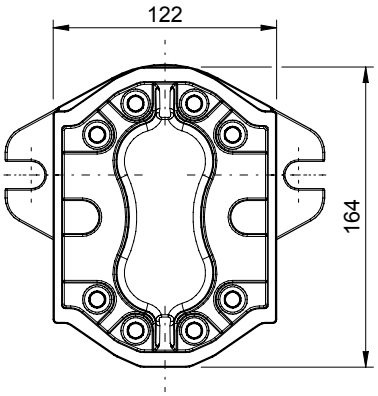

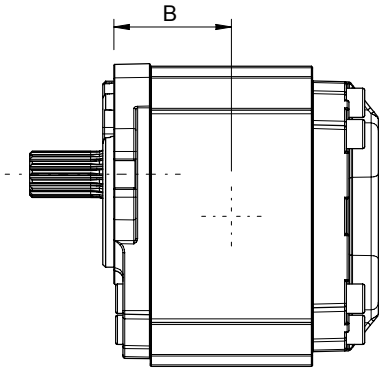

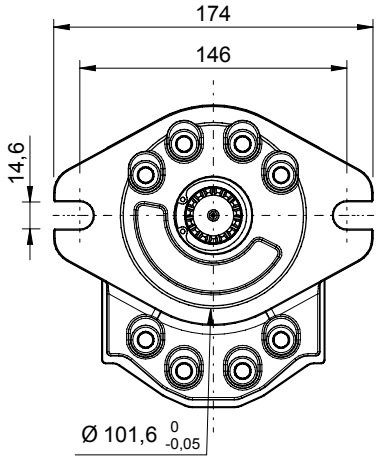

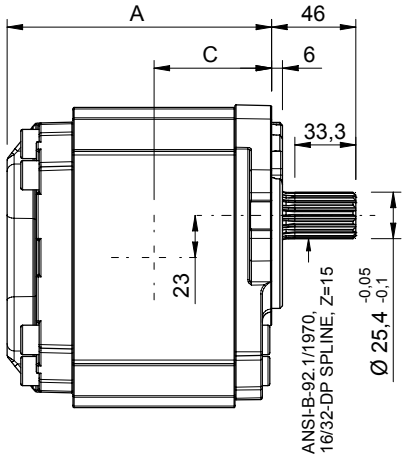

GR55 - TYPE / *TIPO* FSAEB AT15										
Type *Tipo*	CC	L/min	Dimensions A *Dimensioni A*	Dimensions B *Dimensioni B*	Dimensions C *Dimensioni C*		Continuous Pressure *Pressione continua*	Intermittent Pressure *Pressione intermittente* (*)	Peak pressure *Picco pressione* (*)	Noise level *Livello rumore*
					O	OE				
50	50,5	72,7	157,0	70,5	70,5	70,5	275	280	300	57
63	63,5	91,4	166,0	75,0	78,5	75,0	249	260	280	57
75	75,0	108,1	174,0	79,0	82,5	79,0	229	250	270	57
90	90,9	130,9	185,0	84,5	88,0	84,5	178	240	260	57

Max torque / *Coppia max:* 700 Nm

* Intermittent: cycle 20 sec. ON & 3 sec. OFF - Peak: cycle 1 sec. ON & 3 sec OFF. Intermittente: ciclo 20 sec. ON & 3 sec. OFF - Picco: ciclo 1 sec. ON & 3 sec OFF

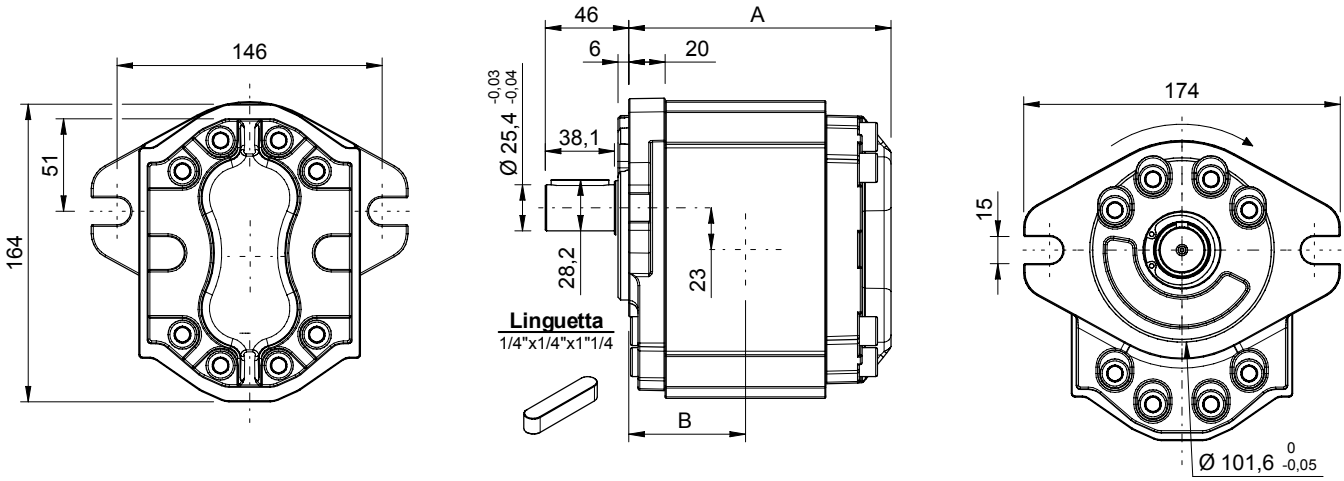

GR55 - TYPE / *TIPO* FSAEB AC								
Type ***Tipo***	**CC**	**L/min**	**Dimensions A** ***Dimensioni A***	**Dimensions B** ***Dimensioni B***	**Continuous Pressure** ***Pressione continua***	**Intermittent Pressure** ***Pressione intermittente*** **(*)**	**Peak pressure** ***Picco pressione (*)***	**Noise level** ***Livello rumore***
50	50,5	72,7	179,5	81,50	275	280	300	57
63	63,5	91,4	188,5	86,00	249	260	280	57
75	75,0	108,1	196,5	90,00	229	250	270	57
90	90,9	130,9	207,5	95,5	178	240	260	57

Max torque / *Coppia max:* 550 Nm

* Intermittent: cycle 20 sec. ON & 3 sec. OFF - Peak: cycle 1 sec. ON & 3 sec OFF. Intermittente: ciclo 20 sec. ON & 3 sec. OFF - Picco: ciclo 1 sec. ON & 3 sec OFF

GR55 INLET OUTLET PORTS / *PORTE DI ASPIRAZIONE E MANDATA* - **Type / *Tipo O - OE***

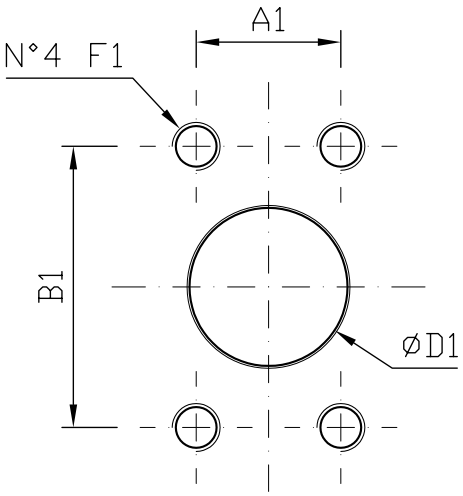

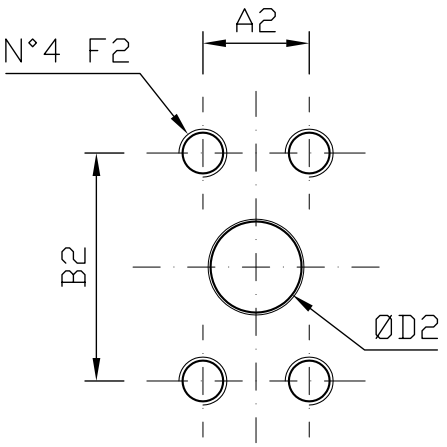

INLET			
Type port	**"O"**	**"OE"**	
Size port	**SAE-3000 1" ¼**	**SAE-3000 1" ¼** only for 50cc	**SAE-3000 1" ½**
A1	30,20	30,20	35,70
B1	58,70	58,70	69,85
ØD1	33,00	33,00	38,00
F1	M10x20	M10x18	M12x18

OUTLET		
Type port	**"O"**	**"OE"**
Size port	**SAE-3000 ¾"**	**SAE-3000 1"**
A2	22,20	26,20
B2	47,60	52,40
ØD2	19,00	25,00
F2	M10X18	M10X18

SETTIMA research & innovation, always
Grampelhuber GmbH | www.grampelhuber.at
A-4810 Gmunden/Österreich
T: +43 (0)7612-64902-0 office@grampelhuber.at

GR72 - Dimensional drawings / Disegni dimensionali

GR72 SHAFT AND FLANGE TYPES AND DIMENSIONS / *TIPI DI ALBERO E FLANGIA E DIMENSIONI*

Group 4 pumps / *Pompe gruppo 4*

Type	Class	Flange & Shaft available types	Ports	Weight
GR72	2V	FSAED AC FSAED AT23	ME	30 Kg

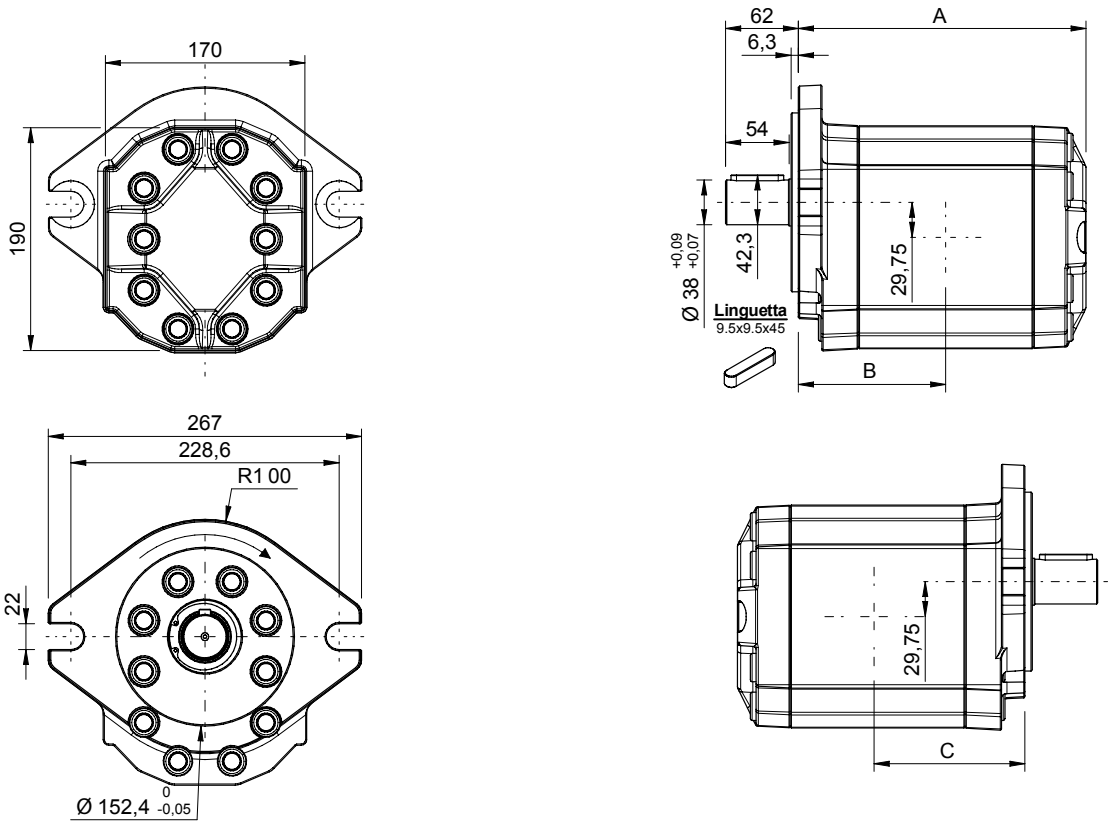

GR72 - TYPE / *TIPO* FSAED AC									
Type *Tipo*	CC	L/min	Dimensions A *Dimensioni A*	Dimensions B *Dimensioni B*	Dimensions C *Dimensioni C*	Continuous Pressure *Pressione continua*	Intermittent Pressure *Pressione intermittente* (*)	Peak pressure *Picco pressione (*)*	Noise level *Livello rumore*
94	94,1	136	245	125,5	128,5	240	250	260	57
101	101,4	147	248	127	134	230	240	250	57
125	125,5	181	258	132	145	220	220	230	57
150	150,9	218	268,5	137,3	150,3	200	210	220	57
175	175	253	278,5	142,3	155,3	180	190	200	57
200	200,4	290	289	147,5	160,5	160	170	180	57

Max torque / *Coppia max:* 1000 Nm

* Intermittent: cycle 20 sec. ON & 3 sec. OFF - Peak: cycle 1 sec. ON & 3 sec OFF. Intermittente: ciclo 20 sec. ON & 3 sec. OFF - Picco: ciclo 1 sec. ON & 3 sec OFF

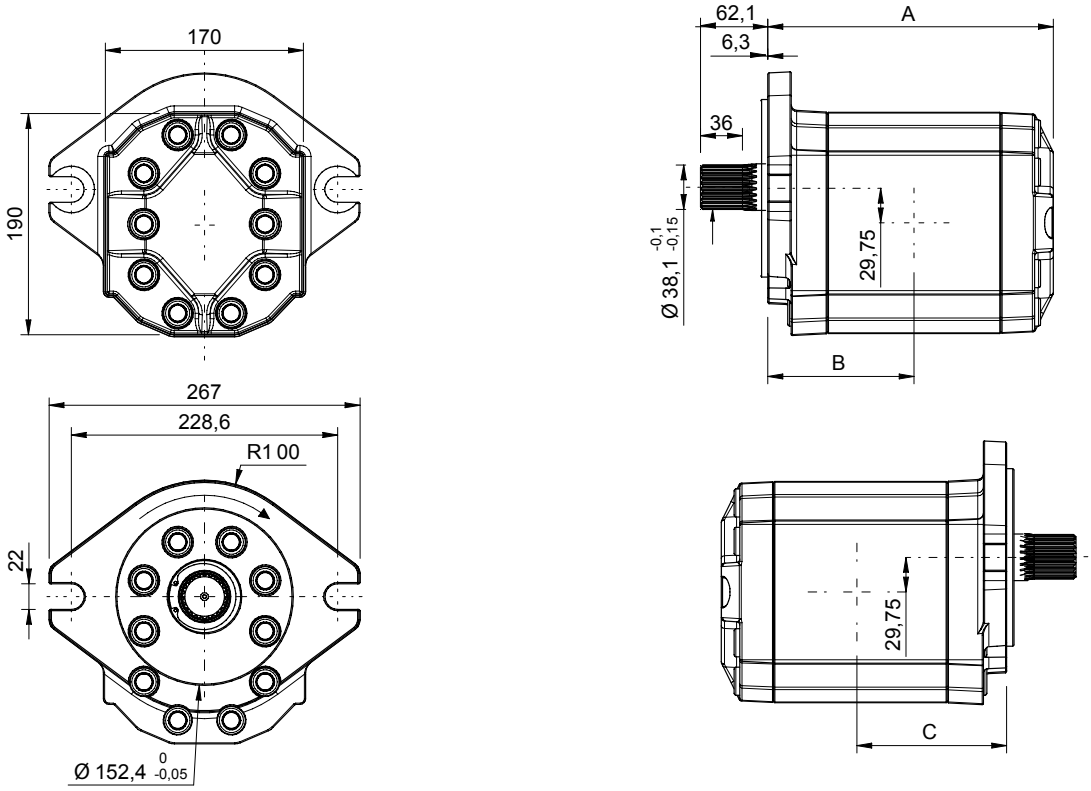

GR72 - TYPE / *TIPO* FSAED AT23									
Type ***Tipo***	**CC**	**L/min**	**Dimensions A** ***Dimensioni A***	**Dimensions B** ***Dimensioni B***	**Dimensions C** ***Dimensioni C***	**Continuous Pressure** ***Pressione continua***	**Intermittent Pressure** ***Pressione intermittente*** **(*)**	**Peak pressure** ***Picco pressione (*)***	**Noise level** ***Livello rumore***
94	94,1	136	245	125,5	128,5	240	250	260	57
101	101,4	147	248	127	134	230	240	250	57
125	125,5	181	258	132	145	220	220	230	57
150	150,9	218	268,5	137,3	150,3	200	210	220	57
175	175	253	278,5	142,3	155,3	180	190	200	57
200	200,4	290	289	147,5	160,5	160	170	180	57

Max torque / *Coppia max:* 1200 Nm

* Intermittent: cycle 20 sec. ON & 3 sec. OFF - Peak: cycle 1 sec. ON & 3 sec OFF. Intermittente: ciclo 20 sec. ON & 3 sec. OFF - Picco: ciclo 1 sec. ON & 3 sec OFF

GR72 INLET OUTLET PORTS / *PORTE DI ASPIRAZIONE E MANDATA* - **Type ME / *Tipo ME***

SAE 3000 2" ½

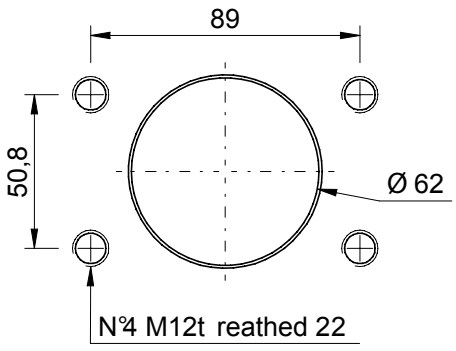

Inlet

SAE 6000 1" ½

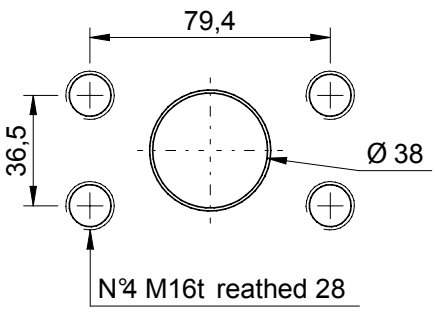

Outlet

SETTIMA research & innovation, always
Grampelhuber GmbH | www.grampelhuber.at
A-4810 Gmunden/Österreich
T: +43 (0)7612-64902-0 office@grampelhuber.at

Flow performances @ 46 cSt

GR28 1-C3 / 1L-GL54 / 1L-G54

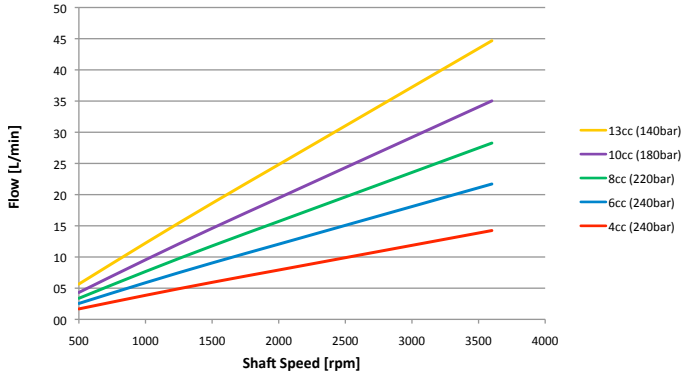

GR28 1P-C2

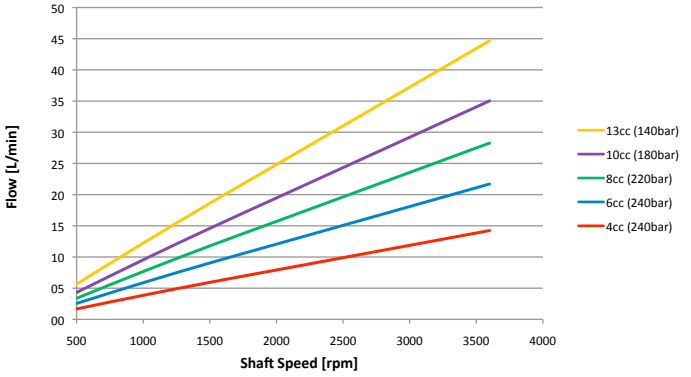

GR28 1K-G54 / 1K-GL54

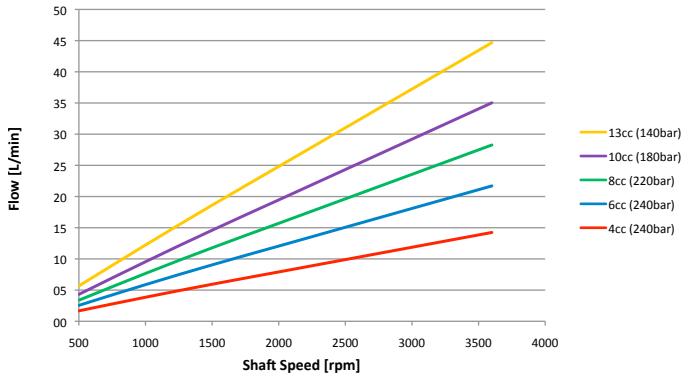

GR28 SAEA-AC

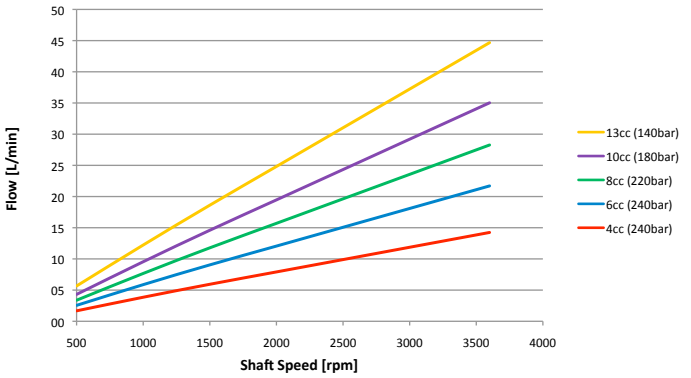

GR33

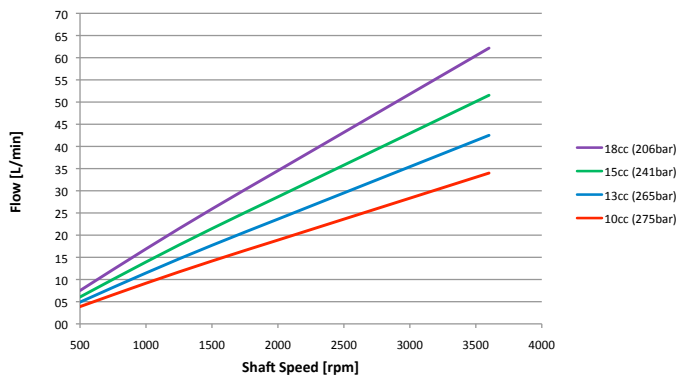

GR38

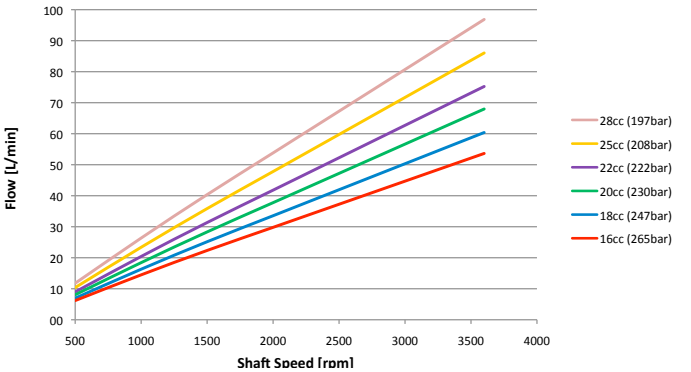

GR38 SAEA-T9

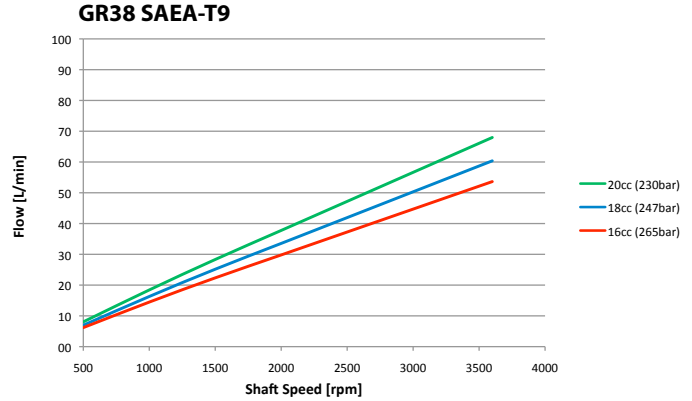

GR47

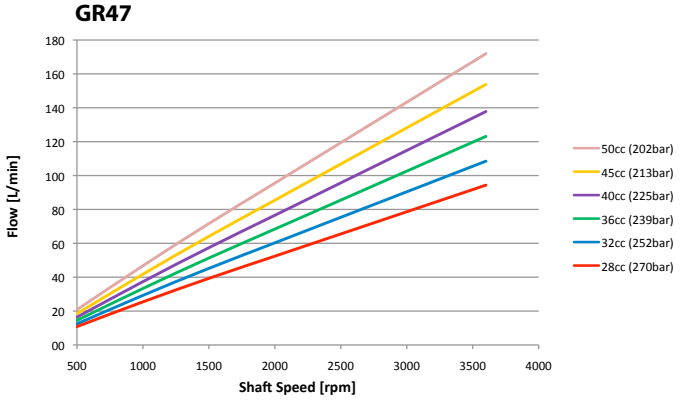

Flow performances @ 46 cSt

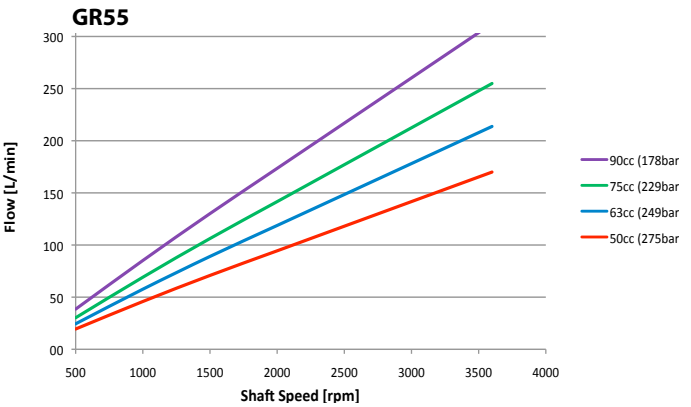

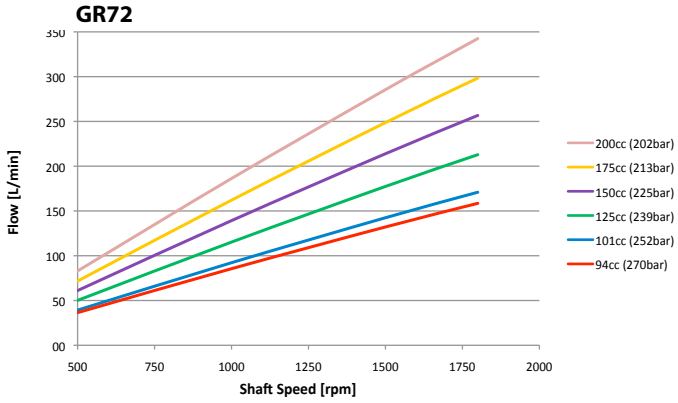



Servo Continuum® pump - *Servopompa Continuum®*

Grampelhuber GmbH | www.grampelhuber.at
A-4810 Gmunden/Österreich
T: +43 (0)7612-64902-0 office@grampelhuber.at

Power-torque performances @ 46 cSt

GR28 4 CC

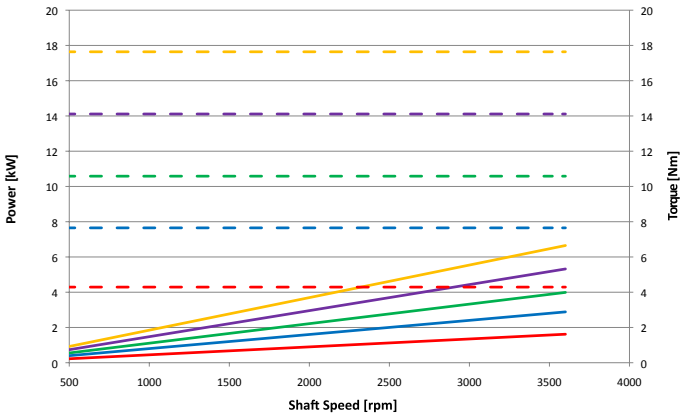

GR28 6 CC

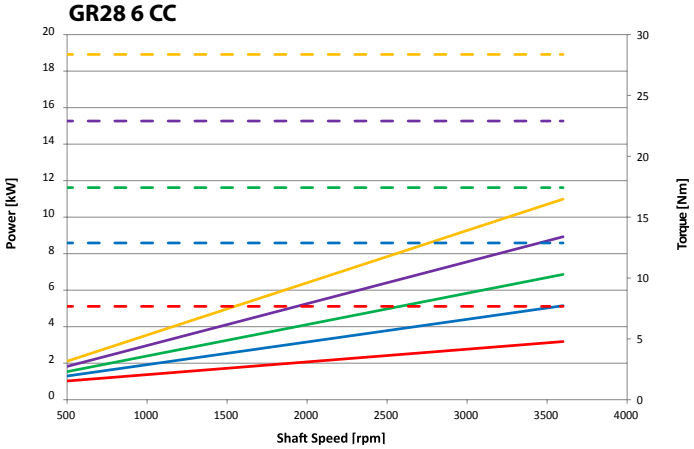

GR28 8 CC

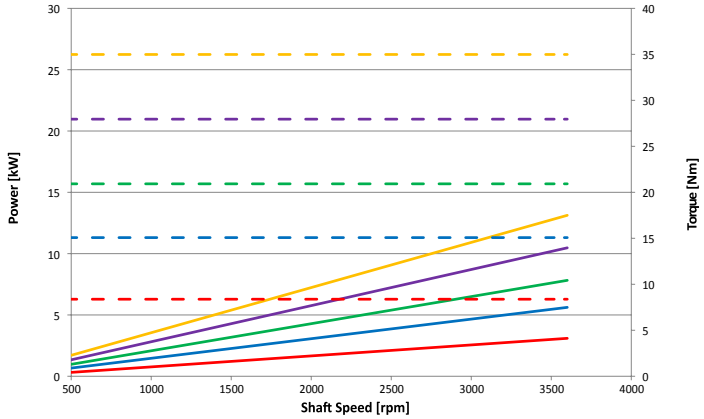

GR28 10 CC

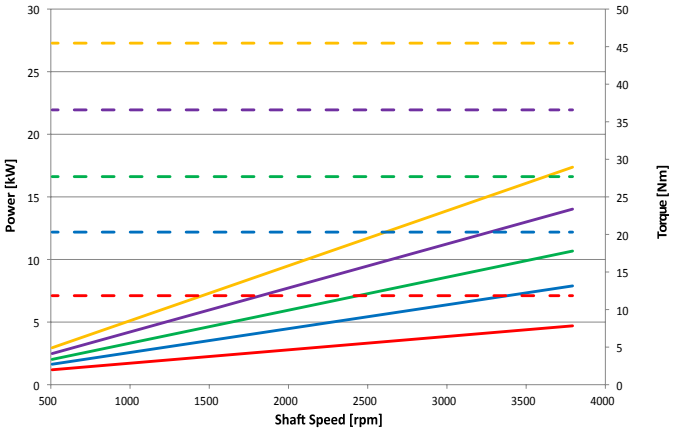

GR28 13 CC

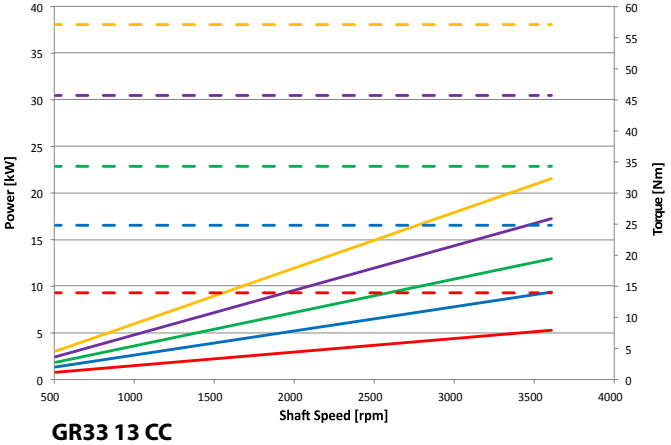

GR33 10 CC

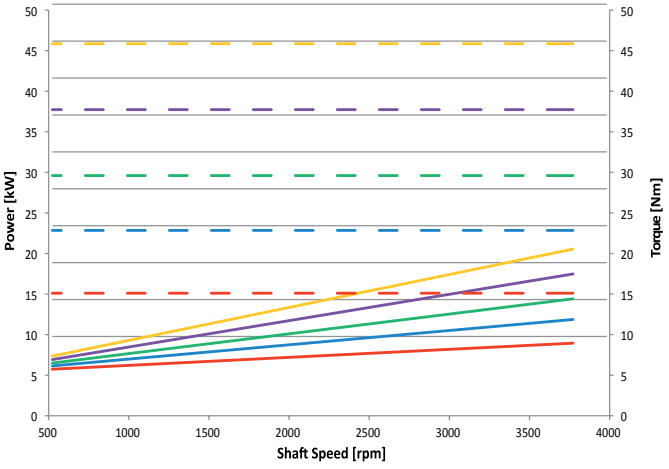

GR33 13 CC

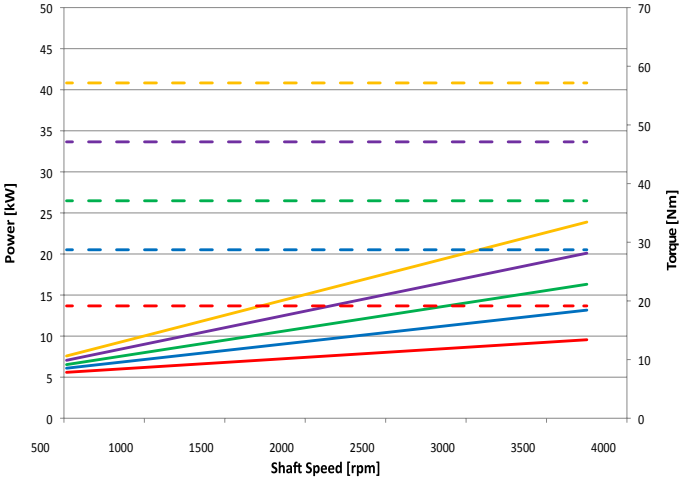

Power-torque performances @ 46 cSt

GR33 15 CC

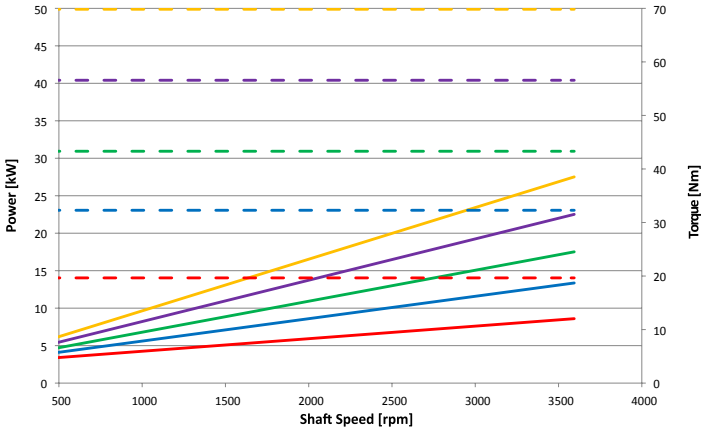

GR33 18 CC

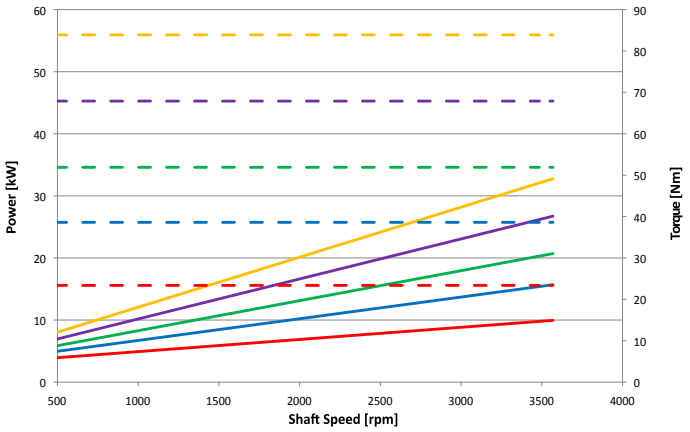

GR38 16 CC

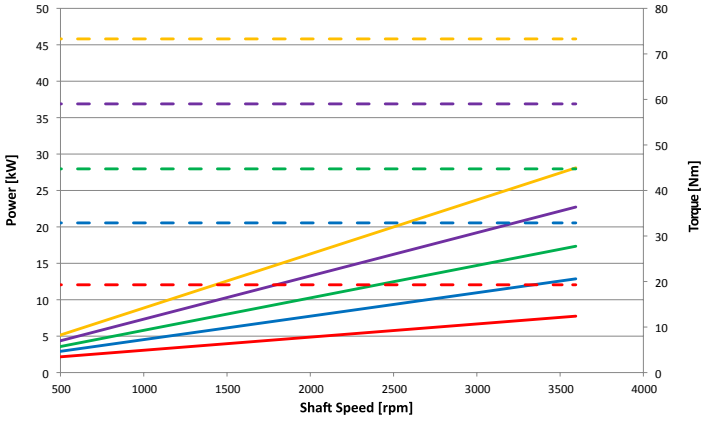

GR38 18 CC

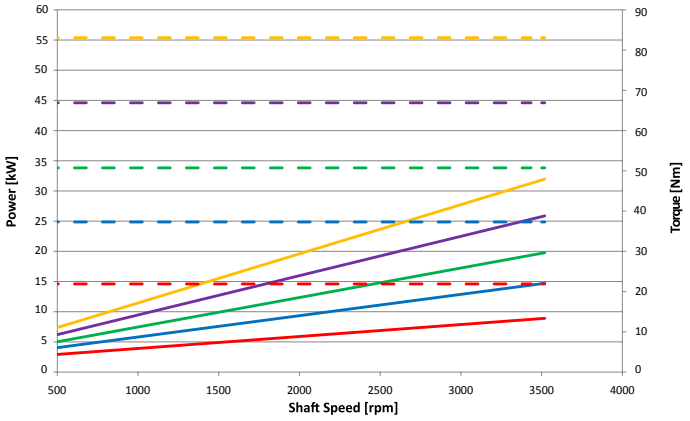

GR38 20 CC

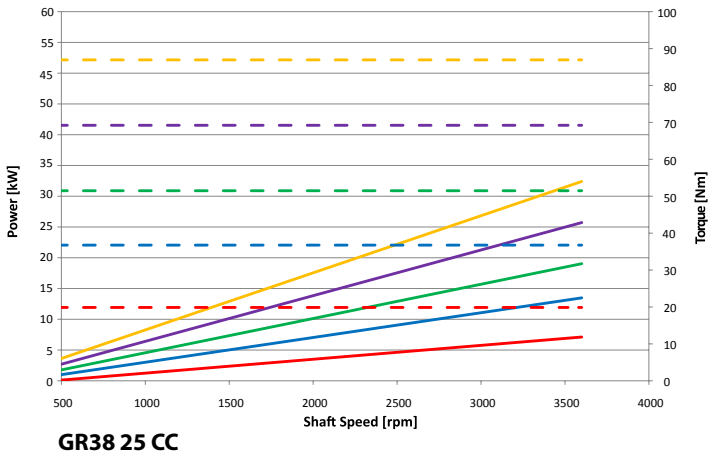

GR38 22 CC

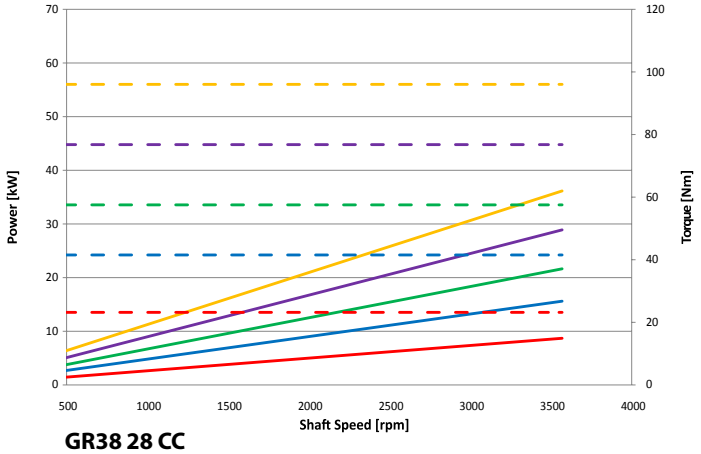

GR38 25 CC

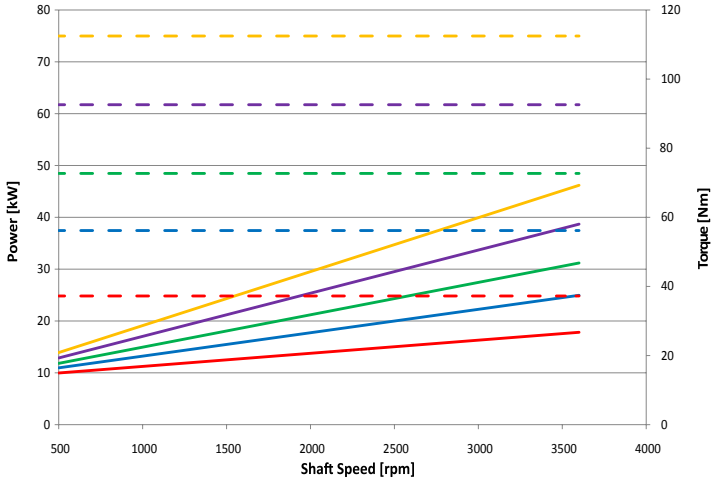

GR38 28 CC

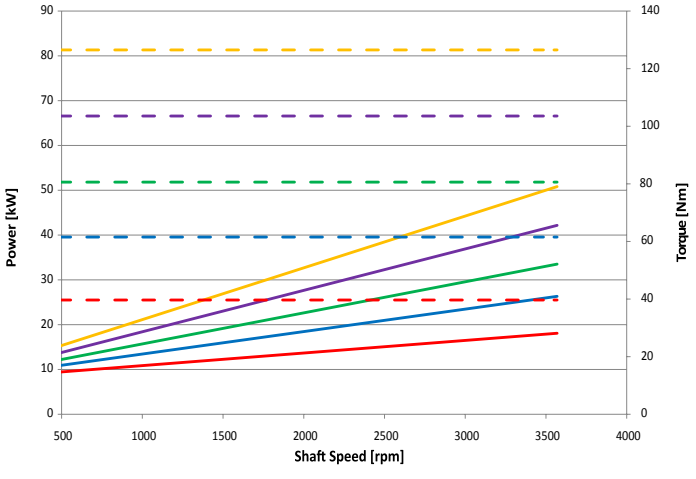

Grampelhuber GmbH | www.grampelhuber.at
A-4810 Gmunden/Österreich
T: +43 (0)7612-64902-0 office@grampelhuber.at

Power-torque performances @ 46 cSt

GR47 28 CC

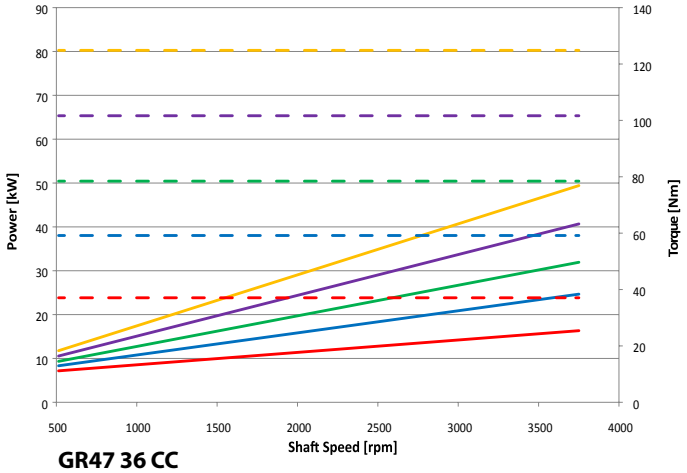

GR47 32 CC

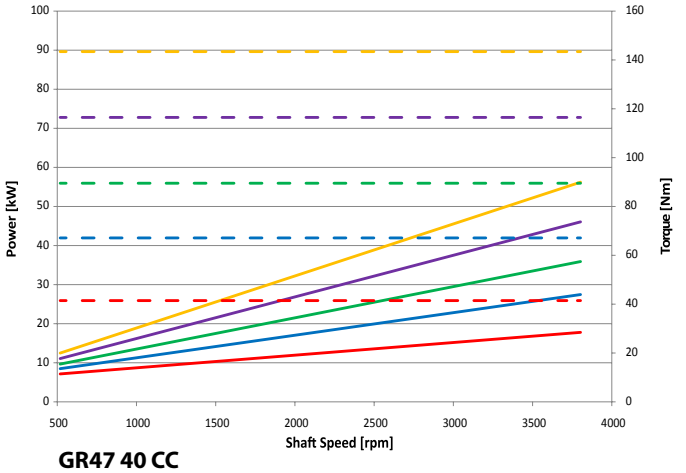

GR47 36 CC

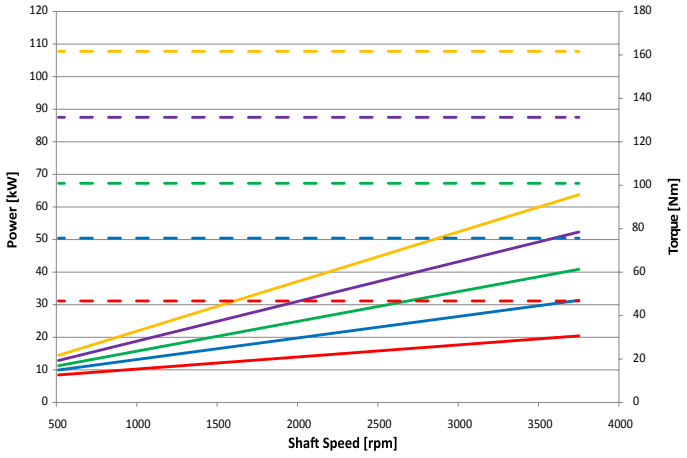

GR47 40 CC

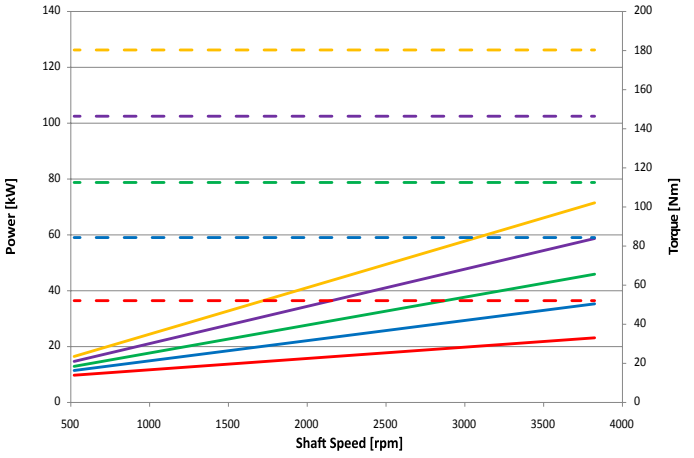

GR47 45 CC

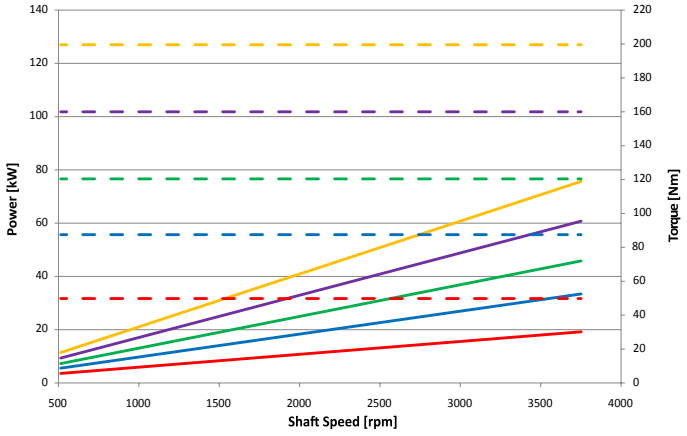

GR47 50 CC

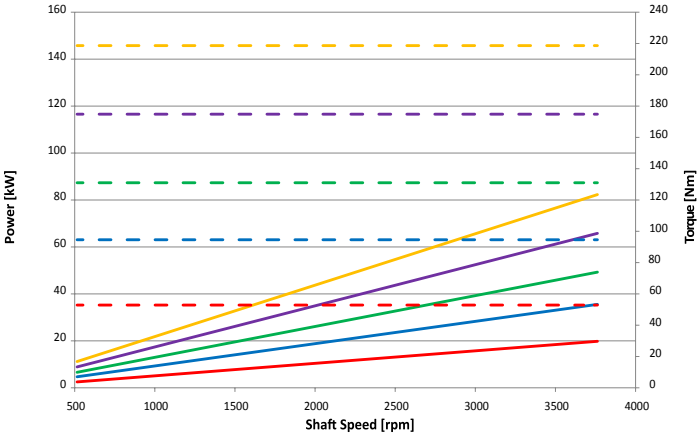

GR55 50 CC

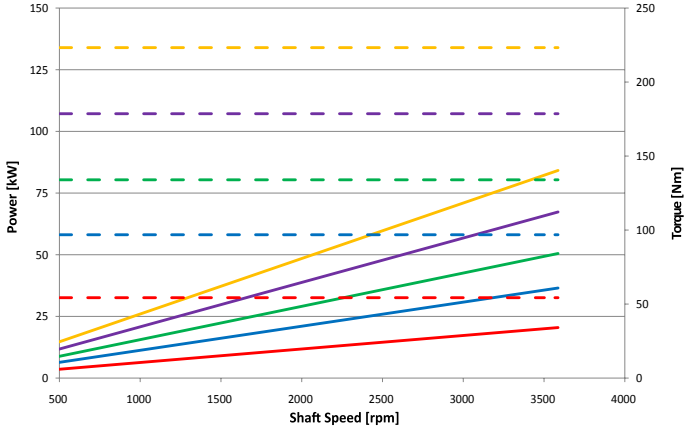

GR55 63 CC

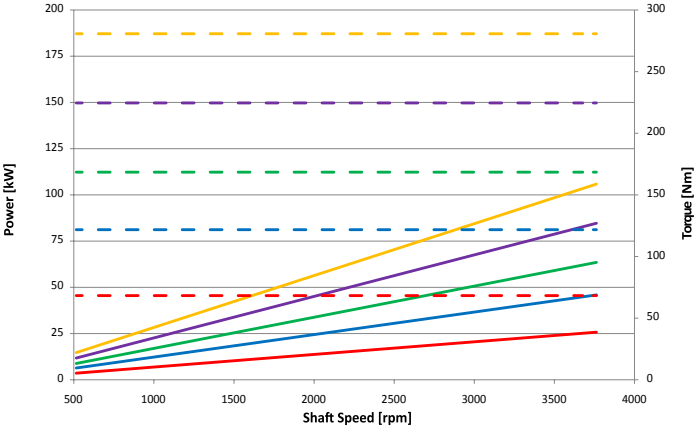

Power-torque performances @ 46 cSt

GR55 75

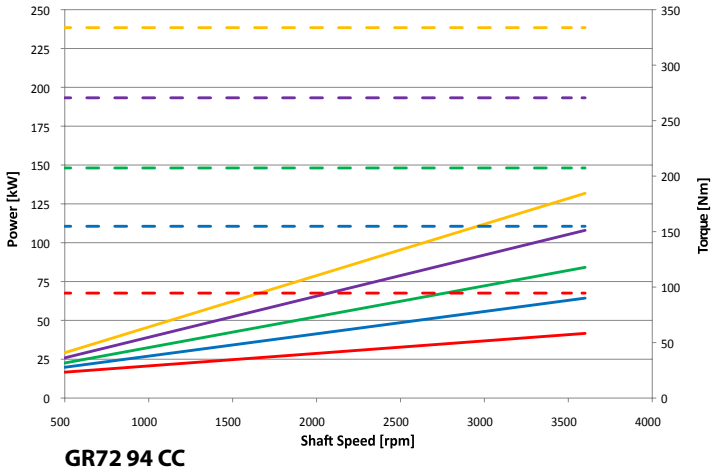

GR55 90 CC

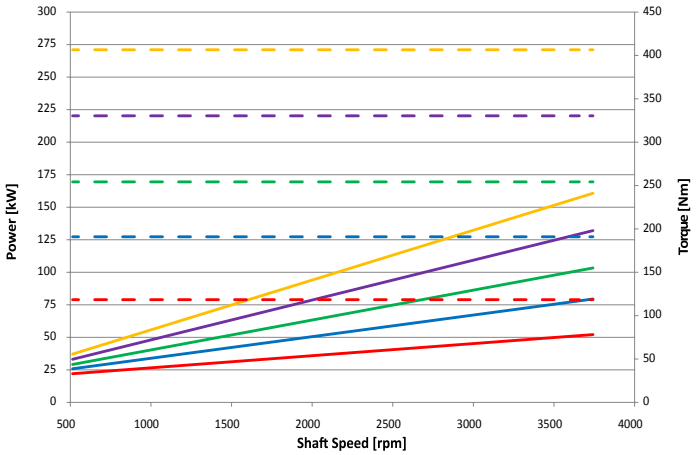

GR72 94 CC

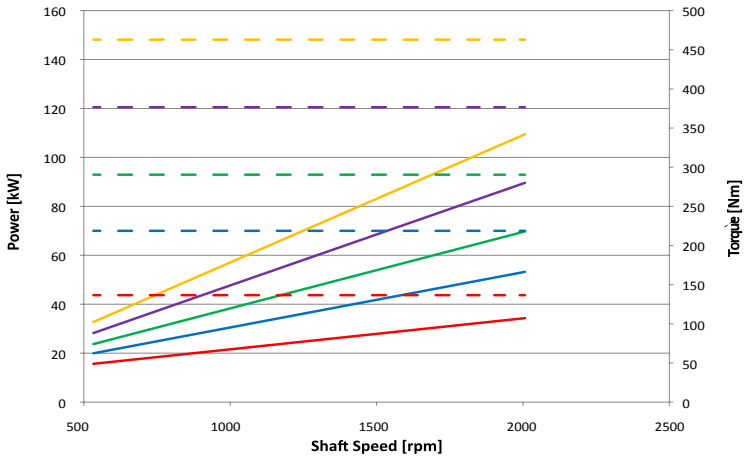

GR72 101 CC

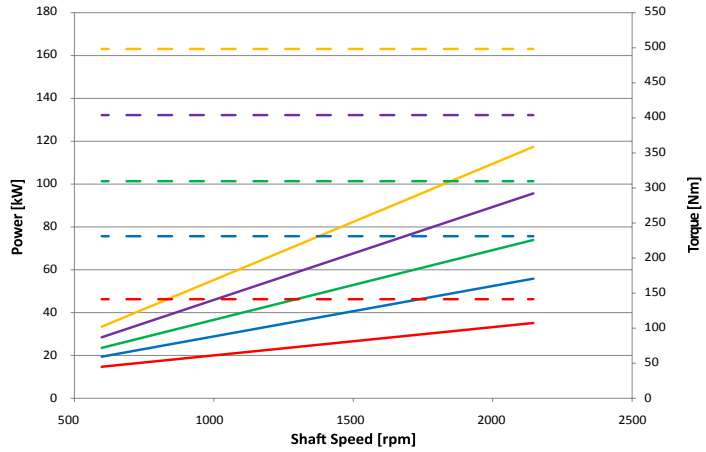

GR72 125 CC

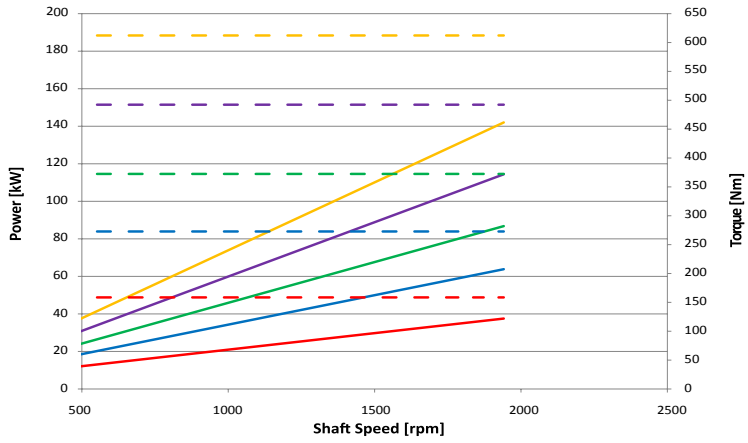

GR72 150 CC

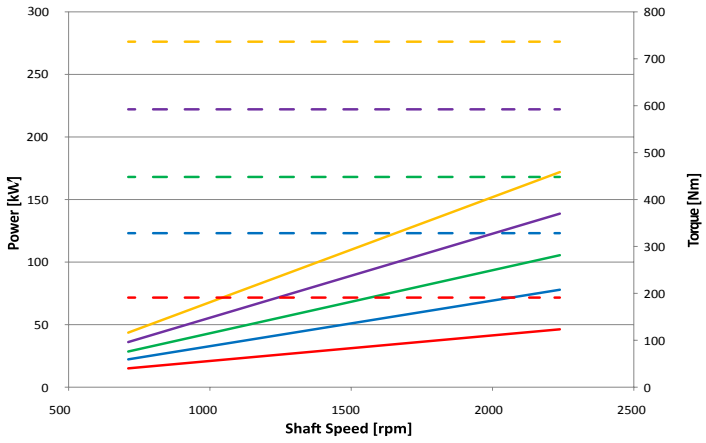

GR72 175 CC

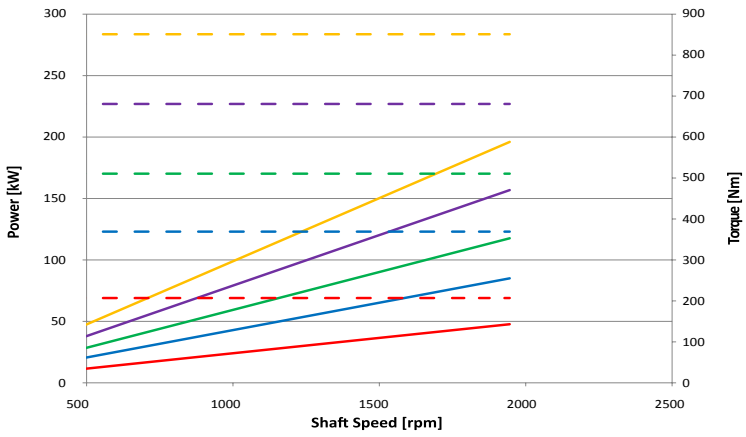

GR72 200 CC

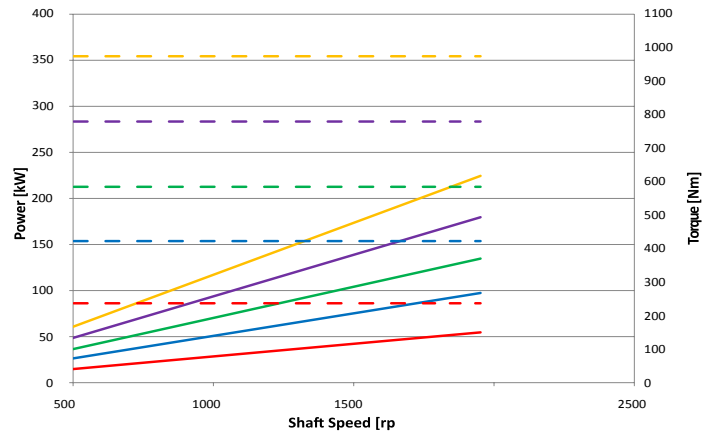

Grampelhuber GmbH | www.grampelhuber.at
A-4810 Gmunden/Österreich
T: +43 (0)7612-64902-0 office@grampelhuber.at

Tandem & multiple pumps / Pompe doppie e multiple

Continuum® pumps are suitable for multiple setups, whereby the drive shaft of the first pump is extended to a second and even a third **Continuum®** pump. Each pump is connected to another by means of coupling. Each pump has its own suction port. Basically the technical specifications of single pumps apply also to multiple setups**. The maximum speed is determined by the highest pump speed rate in use. In case of multiple setup configurations, it is recommended to use the largest displacement for the first pump. The front pump may be equipped with different types of flange and shaft.

Ordering code / Codice ordine

Multiple setups / *Pompe multiple*

Type *Tipo*	Class *Classe*	Displacement *Cilindrata*	Flange & shaft *Flangia & albero*	Ports *Porte*	Type 2nd stage *Tipo 2° stadio*	*Displacement 2nd stage Cilindrata 2° stadio*	Ports *Porte*	Shaft seal *Guarnizione albero*	Rotation *Rotazione*
DG28	2V	004-006-008-010-013	F1AC3	G-U	GR28	004-006-008-010-013	G-U	Standard NBR **(none)** Optional FKM **V**	Standard DX **(none)**  Optional **SX*** 
DG33	2C	010-013-015-018	F2AC4	G-Q-U-M	GR28				
					GR33	010-013-015-018	G-Q-U		
					GR38	016-018-020-022-025-028			
DG38	2C	016-018-020-022-025-028	F2AC4	G-Q-U-M	GR28	004-006-008-010-013	G-U		
					GR33	010-013-015-018	G-Q-U		
					GR38	016-018-020-022-025-028			
DG47	2C	028-032-036-040-045-050	F3AC9 FSAEBAT13	G-O-U	GR28	004-006-008-010-013	G-U		
					GR33	010-013-015-018	G-Q-U		
					GR38	016-018-020-022-025-028			
					GR47	028-032-036-040-045-050	O-U		
DG55	2C	050-063-075-090	FSAEBAT15	O-OE	GR28	004-006-008-010-013	G-U		
					GR33	010-013-015-018	G-Q-U		
					GR38	016-018-020-022-025-028			
					GR47	028-032-036-040-045-050	O-U		
					GR55	050-063-075-090	O-OE		
DG72	2V	094-101-125-150-175-200-225	FSAEDAT23	ME	GR47	028-032-036-040-045-050	O-U		
					GR55	050-063-075-090	O-OE		
					GR72	094-101-125-150-175-200	ME		

* Please contact Settima for SX counter clockwise optional rotation. *Contattare Settima per rotazione SX opzionale.*
** The minimum operating pressure recommended for the second stage is 30 bar. In case of lower pressure, please, contact Settima. *Minima pressione di funzionamento consigliata per il secondo stadio 30 bar, al di sotto, contattare Settima.*

GR28 - Group 1 tandem pumps*

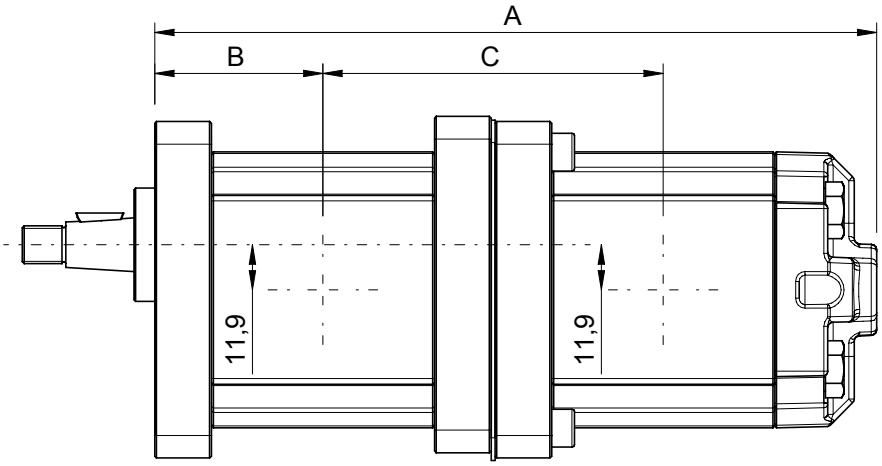

GR28 + GR28			2°				
			4	6	8	10	13
1°	4	A	191	196,5	201,5	206,5	213,4
		B	44,5	44,5	44,5	44,5	44,5
		C	90	92,8	95,3	97,8	101,2
	6	A	196,5	202	207	212	218,9
		B	47,3	47,3	47,3	47,3	47,3
		C	92,8	95,5	98	100,5	104
	8	A	201,5	207	212	217	223,9
		B	49,8	49,8	49,8	49,8	49,8
		C	95,3	98	100,5	103	106,5
	10	A	206,5	212	217	222	228,9
		B	52,3	52,3	52,3	52,3	52,3
		C	97,8	100,5	103	105,5	109
	13	A	213,4	218,9	223,9	228,9	235,8
		B	55,7	55,7	55,7	55,7	55,7
		C	101,2	104	106,5	109	112,4

Available flanges and shafts for GR28
Flange e alberi disponibili per GR28

Type flange 1C3 / *Flangia tipo 1 C3*

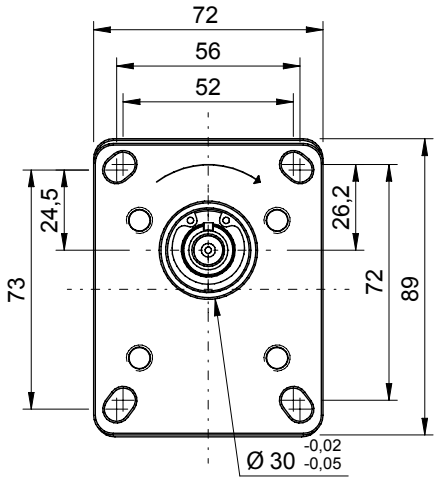

Type shaft 1C3 / *Albero tipo 1 C3*
Max torque / *Coppia max 100 Nm*

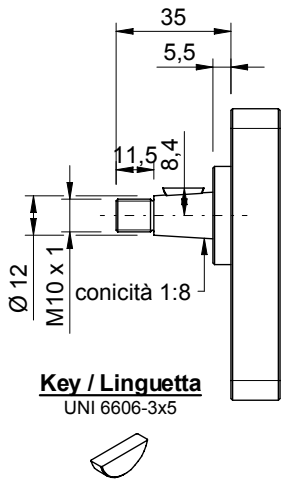

* Standard multiple pumps are delivered with both stages in fluid communication. When placing an order, it is necessary to specify if the two stages will handle different kinds of fluids or fluids coming from more than one reservoir. / *Le pompe multiple sono consegnate con entrambi gli stadi in comunicazione di fluido. In fase di ordine, occorre specificare se la pompa multipla utilizza oli differenti sui diversi stadi o provenienti da più di un serbatoio.*

SETTIMA research & innovation, always
Grampelhuber GmbH | www.grampelhuber.at
A-4810 Gmunden/Österreich
T: +43 (0)7612-64902-0 office@grampelhuber.at

GR33 - Groups 2 tandem pumps*

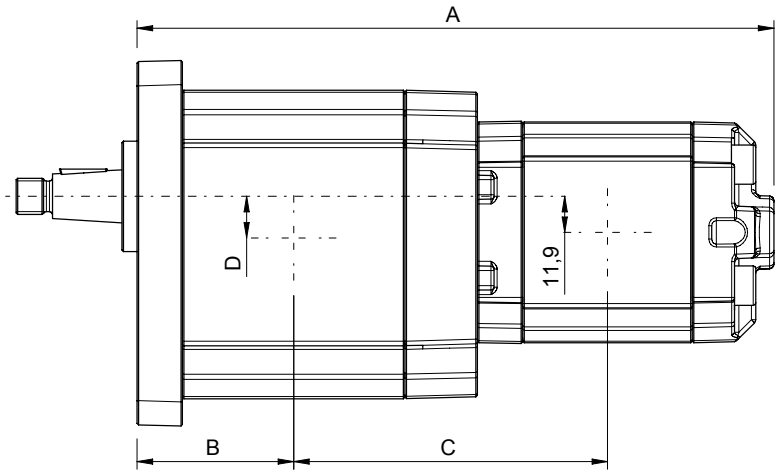

GR33 + GR28			2°				
			4	6	8	10	13
1°	10	A	217,5	223	228	233	239,9
		B	53,8	53,8	53,8	53,8	53,8
		C	107,3	110	112,5	115	118,5
		D	13,75	13,75	13,75	13,75	13,75
	13	A	222,4	227,9	232,9	237,9	244,8
		B	56,2	56,2	56,2	56,2	56,2
		C	109,7	112,5	115	117,5	120,9
		D	13,75	13,75	13,75	13,75	13,75
	15	A	227,4	232,9	237,9	242,9	249,8
		B	58,7	58,7	58,7	58,7	58,7
		C	112,2	115	117,5	120,	123,4
		D	13,75	13,75	13,75	13,75	13,75
	18	A	233,2	238,7	243,7	248,7	255,6
		B	61,6	61,6	61,6	61,6	61,6
		C	115,1	117,9	120,4	122,9	126,3
		D	13,75	13,75	13,75	13,75	13,75

* Standard multiple pumps are delivered with both stages in fluid communication. When placing an order, it is necessary to specify if the two stages will handle different kinds of fluids or fluids coming from more than one reservoir. / *Le pompe multiple sono consegnate con entrambi gli stadi in comunicazione di fluido. In fase di ordine, occorre specificare se la pompa multipla utilizza oli differenti sui diversi stadi o provenienti da più di un serbatoio.*

GR33 - Groups 2 tandem pumps*

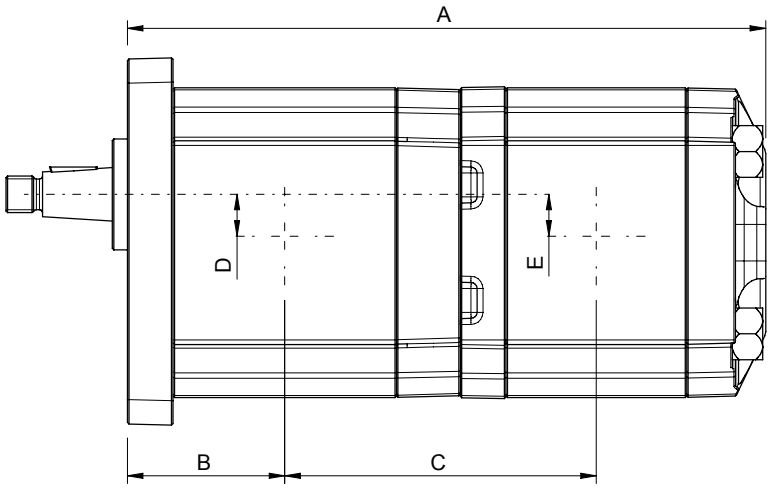

GR33 + GR33			2°			
			10	13	15	18
1°	10	A	218	222,9	227,9	233,7
		B	53,8	53,8	53,8	53,8
		C	106,5	109	111,5	114,4
		D	13,75	13,75	13,75	13,75
		E	13,75	13,75	13,75	13,75
	13	A	222,9	227,8	232,8	238,6
		B	56,2	56,2	56,2	56,2
		C	109	111,4	113,9	116,8
		D	13,75	13,75	13,75	13,75
		E	13,75	13,75	13,75	13,75
	15	A	227,9	232,8	237,8	243,6
		B	58,7	58,7	58,7	58,7
		C	111,5	113,9	116,4	119,3
		D	13,75	13,75	13,75	13,75
		E	13,75	13,75	13,75	13,75
	18	A	233,7	238,6	243,6	249,4
		B	61,6	61,6	61,6	61,6
		C	114,4	116,8	119,3	122,2
		D	13,75	13,75	13,75	13,75
		E	13,75	13,75	13,75	13,75

Available flanges and shafts for GR33
Flange ed alberi disponibili per GR33

Type flange 2C4 /
Flangia tipo 2C4

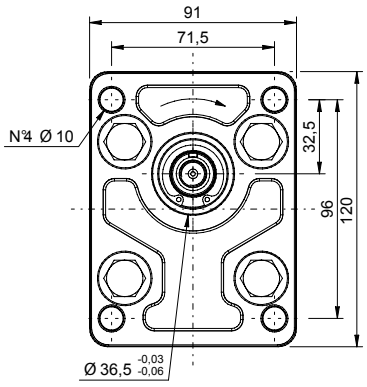

Type shaft 2C4 /
Albero tipo 2C4
Max torque /
Coppia max 210 Nm

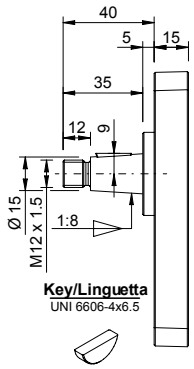

* Standard multiple pumps are delivered with both stages in fluid communication. When placing an order, it is necessary to specify if the two stages will handle different kinds of fluids or fluids coming from more than one reservoir. / *Le pompe multiple sono consegnate con entrambi gli stadi in comunicazione di fluido. In fase di ordine, occorre specificare se la pompa multipla utilizza oli differenti sui diversi stadi o provenienti da più di un serbatoio.*

SETTIMA research & innovation, always
Grampelhuber GmbH | www.grampelhuber.at
A-4810 Gmunden/Österreich
T: +43 (0)7612-64902-0 office@grampelhuber.at

GR38 - Groups 2 tandem pumps*

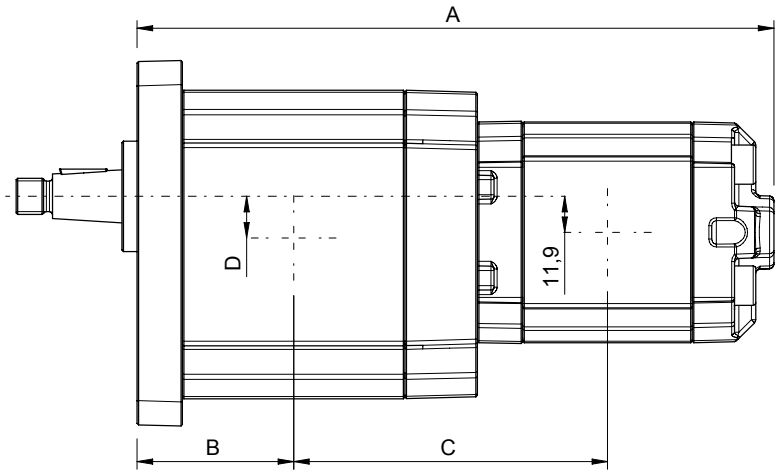

GR38 + GR28			2°				
			4	6	8	10	13
1°	16	A	224	229,5	234,5	239,5	246,4
		B	55,5	55,5	55,5	55,5	55,5
		C	112	114,8	117,3	119,8	123,2
		D	15,9	15,9	15,9	15,9	15,9
	18	A	227	232,5	237,5	242,5	249,4
		B	57	57	57	57	57
		C	113,5	116,3	118,8	121,3	124,7
		D	15,9	15,9	15,9	15,9	15,9
	20	A	230	235,5	240,5	245,5	252,4
		B	58,5	58,5	58,5	58,5	58,5
		C	115	117,8	120,3	122,8	126,2
		D	15,9	15,9	15,9	15,9	15,9
	22	A	233	238,5	243,5	248,5	255,4
		B	60	60	60	60	60
		C	116,5	119,3	121,8	124,3	127,7
		D	15,9	15,9	15,9	15,9	15,9
	25	A	237,5	243	248	253	259,9
		B	62,3	62,3	62,3	62,3	62,3
		C	237,5	243	248	253	259,9
		D	15,9	15,9	15,9	15,9	15,9
	28	A	242	247,5	252,5	257,5	264,4
		B	64,5	64,5	64,5	64,5	64,5
		C	121	123,8	126,3	128,8	132,2
		D	15,9	15,9	15,9	15,9	15,9

GR38 - Groups 2 tandem pumps*

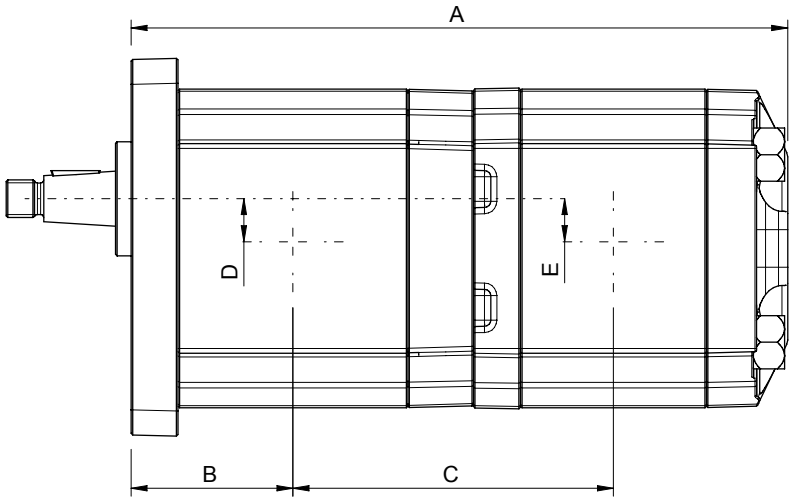

GR38 + GR33			2°			
			10	13	15	18
1°	16	A	224,5	229,4	234,4	240,2
		B	55,5	55,5	55,5	55,5
		C	111,3	113,7	116,2	11,91
		D	15,9	15,9	15,9	15,9
		E	13,75	13,75	13,75	13,75
	18	A	227,5	232,4	237,4	243,2
		B	57	57	57	57
		C	112,8	115,2	117,7	120,6
		D	15,9	15,9	15,9	15,9
		E	13,75	13,75	13,75	13,75
	20	A	230,5	235,4	240,4	246,2
		B	58,5	58,5	58,5	58,5
		C	114,3	116,7	119,2	122,1
		D	15,9	15,9	15,9	15,9
		E	13,75	13,75	13,75	13,75
	22	A	233,5	238,4	243,4	249,2
		B	60	60	60	60
		C	115,8	118,2	120,7	123,6
		D	15,9	15,9	15,9	15,9
		E	13,75	13,75	13,75	13,75
	25	A	238	242,9	247,9	253,7
		B	62,3	62,3	62,3	62,3
		C	118	120,5	123	125,9
		D	15,9	15,9	15,9	15,9
		E	13,75	13,75	13,75	13,75
	28	A	242,5	247,4	252,4	258,2
		B	64,5	64,5	64,5	64,5
		C	120,3	122,7	125,2	128,1
		D	15,9	15,9	15,9	15,9
		E	13,75	13,75	13,75	13,75

SETTIMA research & innovation, always

Grampelhuber GmbH | www.grampelhuber.at
A-4810 Gmunden/Österreich
T: +43 (0)7612-64902-0 office@grampelhuber.at

GR38 - Groups 2 tandem pumps*

GR38 + GR38			2°					
			16	18	20	22	25	28
1°	16	A	228	231	234	237	241,5	246
		B	55,5	55,5	55,5	55,5	55,5	55,5
		C	113	114,5	116	117,5	119,8	122
		D	15,9	15,9	15,9	15,9	15,9	15,9
		E	15,9	15,9	15,9	15,9	15,9	15,9
	18	A	231	234	237	240	244,5	249
		B	57	57	57	57	57	57
		C	114,5	116	117,5	119	121,3	123,5
		D	15,9	15,9	15,9	15,9	15,9	15,9
		E	15,9	15,9	15,9	15,9	15,9	15,9
	20	A	234	237	240	243	247,5	252
		B	58,5	58,5	58,5	58,5	58,5	58,5
		C	114	117,5	119	120,5	122,8	125
		D	15,9	15,9	15,9	15,9	15,9	15,9
		E	15,9	15,9	15,9	15,9	15,9	15,9
	22	A	237	240	243	246	250,5	255
		B	60	60	60	60	60	60
		C	117,5	119	120,5	122	124,3	126,5
		D	15,9	15,9	15,9	15,9	15,9	15,9
		E	15,9	15,9	15,9	15,9	15,9	15,9
	25	A	241,5	244,5	247,5	250,5	255	259,5
		B	62,3	62,3	62,3	62,3	62,3	62,3
		C	119,8	121,3	122,8	124,3	126,5	128,8
		D	15,9	15,9	15,9	15,9	15,9	15,9
		E	15,9	15,9	15,9	15,9	15,9	15,9
	28	A	246	249	252	255	259,5	264
		B	64,5	64,5	64,5	64,5	64,5	64,5
		C	122	123,5	125	126,5	128,8	131
		D	15,9	15,9	15,9	15,9	15,9	15,9
		E	15,9	15,9	15,9	15,9	15,9	15,9

Available flanges and shafts for GR38
Flange ed alberi disponibili per GR38

Type flange 2C4 /
Flangia tipo 2C4

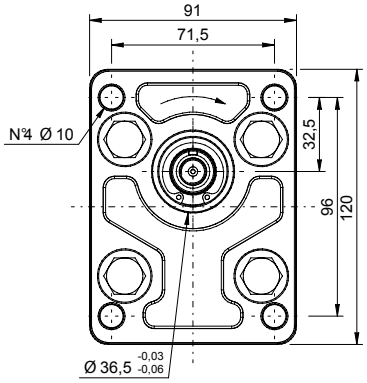

Type shaft 2C4 /
Albero tipo 2C4
Max torque /
Coppia max 210 Nm

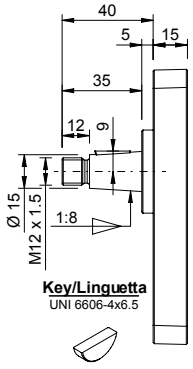

* Standard multiple pumps are delivered with both stages in fluid communication. When placing an order, it is necessary to specify if the two stages will handle different kinds of fluids or fluids coming from more than one reservoir. / *Le pompe multiple sono consegnate con entrambi gli stadi in comunicazione di fluido. In fase di ordine, occorre specificare se la pompa multipla utilizza oli differenti sui diversi stadi o provenienti da più di un serbatoio.*

GR47 - Group 3 tandem pumps

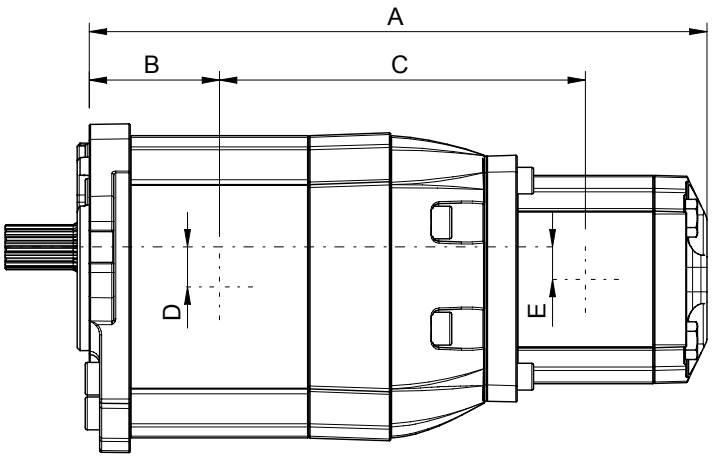

GR47 + GR28			2°				
			4	6	8	10	13
1°	28	A	292,00	297,50	302,50	307,50	314,40
		B	67,50	67,50	67,50	67,50	67,50
		C	168,00	170,75	173,25	175,75	179,25
		D	19,50	19,50	19,50	19,50	19,50
		E	11,90	11,90	11,90	11,90	11,90
	32	A	296,00	301,50	306,50	311,50	318,40
		B	69,50	69,50	69,50	69,50	69,50
		C	170,00	172,75	175,25	177,75	181,25
		D	19,50	19,50	19,50	19,50	19,50
		E	11,90	11,90	11,90	11,90	11,90
	36	A	300,00	305,50	310,50	315,50	322,40
		B	71,50	71,50	71,50	71,50	71,50
		C	136,00	138,75	141,25	143,75	147,20
		D	19,50	19,50	19,50	19,50	19,50
		E	11,90	11,90	11,90	11,90	11,90
	40	A	304,00	309,50	314,50	319,50	326,40
		B	73,50	73,50	73,50	73,50	73,50
		C	174,00	176,75	179,25	181,75	185,25
		D	19,50	19,50	19,50	19,50	19,50
		E	11,90	11,90	11,90	11,90	11,90
	45	A	308,50	314,00	319,00	324,00	330,90
		B	75,75	75,75	75,75	75,75	75,75
		C	140,25	143,00	145,50	148,00	151,45
		D	19,50	19,50	19,50	19,50	19,50
		E	11,90	11,90	11,90	11,90	11,90
	50	A	313,50	319,00	324,00	329,00	335,90
		B	78,25	78,25	78,25	78,25	78,25
		C	178,75	181,50	184,00	186,50	190,00
		D	19,50	19,50	19,50	19,50	19,50
		E	11,90	11,90	11,90	11,90	11,90

SETTIMA® research & innovation, always

Grampelhuber GmbH | www.grampelhuber.at
A-4810 Gmunden/Österreich
T: +43 (0)7612-64902-0 office@grampelhuber.at

GR47 + GR33			2°			
			10	13	15	18
1°	28	A	305,5	310,4	315,4	321,2
		B	67,5	67,5	67,5	67,5
		C	180,3	182,7	185,2	188,1
		D	19,5	19,5	19,5	19,5
		E	13,75	13,75	13,75	13,75
	32	A	309,5	314,4	319,4	325,2
		B	69,5	69,5	69,5	69,5
		C	182,3	184,7	187,2	190,1
		D	19,50	19,50	19,50	19,50
		E	13,75	13,75	13,75	13,75
	36	A	313,5	318,4	323,4	329,2
		B	71,5	71,5	71,5	71,5
		C	184,3	186,7	189,2	192,1
		D	19,50	19,50	19,50	19,50
		E	13,75	13,75	13,75	13,75
	40	A	317,5	322,4	327,4	333,2
		B	73,5	73,5	73,5	73,5
		C	186,3	188,7	191,2	194,1
		D	19,50	19,50	19,50	19,50
		E	13,75	13,75	13,75	13,75
	45	A	322	236,9	331,9	337,7
		B	75,8	75,8	75,8	75,8
		C	188,5	191	193,5	196,4
		D	19,50	19,50	19,50	19,50
		E	13,75	13,75	13,75	13,75
	50	A	327	331,9	336,9	342,7
		B	78,3	78,3	78,3	78,3
		C	191	193,5	196	198,9
		D	19,50	19,50	19,50	19,50
		E	13,75	13,75	13,75	13,75

GR47 + GR38			2°					
			16	18	20	22	25	28
1°	28	A	309	312	315	318	322,5	327
		B	67,50	67,50	67,50	67,50	67,50	67,50
		C	182	183,5	185	186,5	188,8	191
		D	19,50	19,50	19,50	19,50	19,50	19,50
		E	15,90	15,90	15,90	15,90	15,90	15,90
	32	A	313	316	319	322	326,5	331
		B	69,50	69,50	69,50	69,50	69,50	69,50
		C	184	185,5	187	188,5	190,8	193
		D	19,50	19,50	19,50	19,50	19,50	19,50
		E	15,90	15,90	15,90	15,90	15,90	15,90

GR47 + GR38			2°					
			16	18	20	22	25	28
	36	A	317	320	323	326	330,5	335
		B	71,50	71,50	71,50	71,50	71,50	71,50
		C	186	187,5	189	190,5	192,8	195
		D	19,50	19,50	19,50	19,50	19,50	19,50
		E	15,90	15,90	15,90	15,90	15,90	15,90
	40	A	321	324	327	330	334,5	339
		B	73,50	73,50	73,50	73,50	73,50	73,50
		C	188	189,5	191	192,5	194,8	197
		D	19,50	19,50	19,50	19,50	19,50	19,50
		E	15,90	15,90	15,90	15,90	15,90	15,90
	45	A	325,5	328,5	331,5	334,5	339	343,5
		B	75,8	75,8	75,8	75,8	75,8	75,8
		C	190,3	191,8	193,3	194,8	197	199,3
		D	19,50	19,50	19,50	19,50	19,50	19,50
		E	15,90	15,90	15,90	15,90	15,90	15,90
	50	A	330,5	333,5	336,5	339,5	344	348,5
		B	78,25	78,25	78,25	78,25	78,25	78,25
		C	192,8	194,3	195,8	197,3	199,5	201,8
		D	19,50	19,50	19,50	19,50	19,50	19,50
		E	15,90	15,90	15,90	15,90	15,90	15,90

GR47 + GR47			2°					
			28	32	36	40	45	50
1°	28	A	340,5	344,5	348,5	352,5	357	362
		B	67,50	67,50	67,50	67,50	67,50	67,50
		C	195	197	199	201	203,3	205,8
		D	19,50	19,50	19,50	19,50	19,50	19,50
		E	19,50	19,50	19,50	19,50	19,50	19,50
	32	A	344,5	348,5	352,5	356,5	361	366
		B	69,50	69,50	69,50	69,50	69,50	69,50
		C	197	199	201	203	205,3	207,8
		D	19,50	19,50	19,50	19,50	19,50	19,50
		E	19,50	19,50	19,50	19,50	19,50	19,50
	36	A	348,5	352,5	356,5	360,5	365	370
		B	71,50	71,50	71,50	71,50	71,50	71,50
		C	199	201	203	205	207,3	209,8
		D	19,50	19,50	19,50	19,50	19,50	19,50
		E	19,50	19,50	19,50	19,50	19,50	19,50

SETTIMA® research & innovation, always

Grampelhuber GmbH | www.grampelhuber.at
A-4810 Gmunden/Österreich
T: +43 (0)7612-64902-0 office@grampelhuber.at

GR47 + GR47			2°					
			28	32	36	40	45	50
	40	A	352,5	356,5	360,5	364,5	369	374
		B	73,50	73,50	73,50	73,50	73,50	73,50
		C	201	203	205	207	209,3	211,8
		D	19,50	19,50	19,50	19,50	19,50	19,50
		E	19,50	19,50	19,50	19,50	19,50	19,50
	45	A	357	361	365	369	373,5	378,5
		B	75,8	75,8	75,8	75,8	75,8	75,8
		C	203,3	205,3	207,3	209,3	211,5	214
		D	19,50	19,50	19,50	19,50	19,50	19,50
		E	19,50	19,50	19,50	19,50	19,50	19,50
	50	A	362	366	370	374	378,5	383,5
		B	78,3	78,3	78,3	78,3	78,3	78,3
		C	205,8	207,8	209,8	211,8	214	216,5
		D	19,50	19,50	19,50	19,50	19,50	19,50
		E	19,50	19,50	19,50	19,50	19,50	19,50

Available flanges and shafts for GR47
Flange ed alberi disponibili per GR47

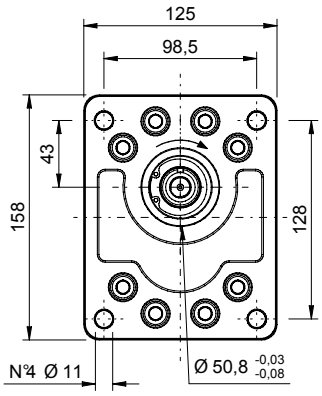

Type flange 3-C9
Flangia tipo 3-C9

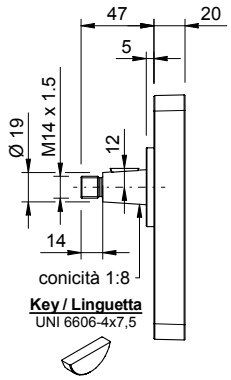

Type shaft 3-C9
Albero tipo 3-C9
Max torque */ Coppia max: 320 Nm*

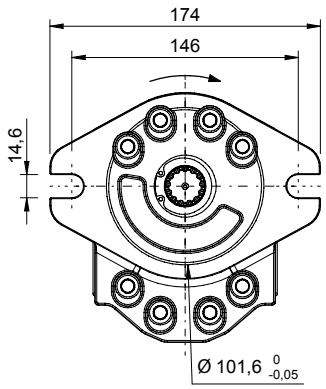

Type flange SAEB-T13
Flangia tipo SAEB-T13

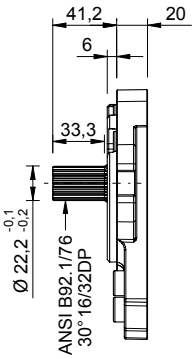

Type shaft SAEB-T13
Albero tipo SAEB-T13
Max torque */ Coppia max: 600 Nm*

GR55 - Group 3 tandem pumps

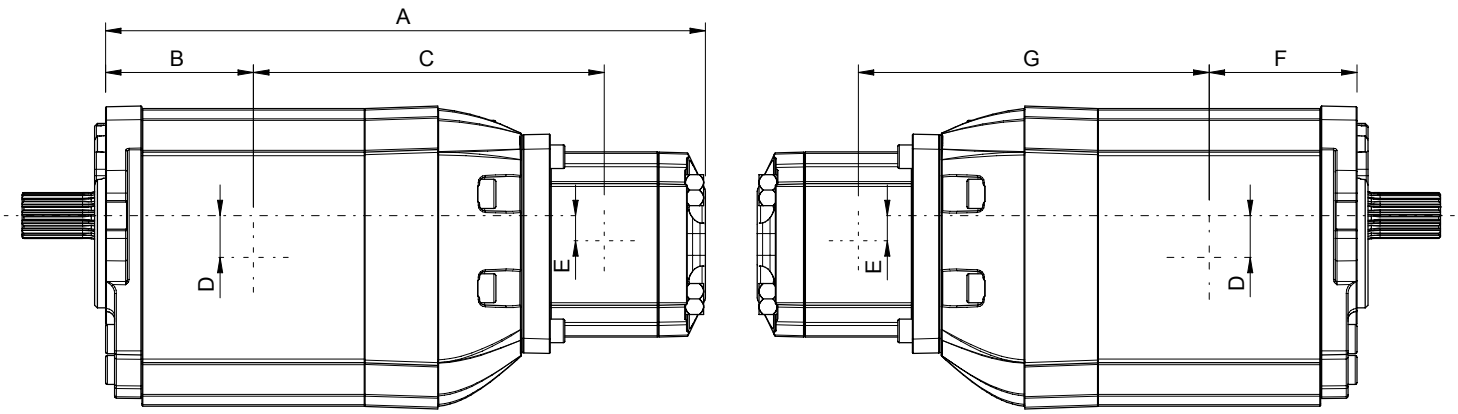

GR55 + GR28				2°				
				4	6	8	10	13
1°	50		A	323	328,5	333,5	338,5	345,4
			B	81,5	81,5	81,5	81,5	81,5
			C	185	187,8	190,3	192,8	196,2
			D	23	23	23	23	23
			E	11,9	11,9	11,9	11,9	11,9
			F	81,5	81,5	81,5	81,5	81,5
			G	185	187,8	190,3	192,8	196,2
	63		A	332,0	337,5	342,5	347,5	354,4
			B	86	86	86	86	86
			C	189,5	192,3	194,8	197,3	200,7
			D	23	23	23	23	23
			E	11,9	11,9	11,9	11,9	11,9
		F	OE ports	89,5	89,5	89,5	89,5	89,5
			O ports	86	86	86	86	86
		G	OE ports	186	188,8	191,3	193,8	197,2
			O ports	189,5	192,3	194,8	197,3	200,7
	75		A	340	345,5	350,5	355,5	362,4
			B	90	90	90	90	90
			C	193,50	196,25	198,75	201,25	204,75
			D	23	23	23	23	23
			E	11,9	11,9	11,9	11,9	11,9
		F	OE ports	93,5	93,5	93,5	93,5	93,5
			O ports	90	90	90	90	90
		G	OE ports	190	192,8	195,3	197,8	201,2
			O ports	193,5	196,25	198,75	201,25	204,75
	90		A	351	356,5	361,5	366,5	373,4
			B	95,5	95,5	95,5	95,5	95,5
			C	199	201,8	204,3	206,8	210,2
			D	23	23	23	23	23
			E	11,9	11,9	11,9	11,9	11,9
		F	OE ports	99	99	99	99	99
			O ports	95,5	95,5	95,5	95,5	95,5
		G	OE ports	195,5	198,3	200,8	203,3	206,7
			O ports	199	201,8	204,3	206,8	210,2

SETTIMA research & innovation, always

Grampelhuber GmbH | www.grampelhuber.at
A-4810 Gmunden/Österreich
T: +43 (0)7612-64902-0 office@grampelhuber.at

GR55 + GR33				2°			
				10	13	15	18
1°	50	A		333,5	338,4	343,4	349,2
		B		81,5	81,5	81,5	81,5
		C		194,3	196,7	199,2	202,1
		D		23	23	23	23
		E		13,75	13,75	13,75	13,75
		F		81,5	81,5	81,5	81,5
		G		194,3	196,7	199,2	202,1
	63	A		342,5	247,4	352,4	358,2
		B		86	86	86	86
		C		198,8	201,2	203,7	206,6
		D		23	23	23	23
		E		13,75	13,75	13,75	13,75
		F	OE ports	89,5	89,5	89,5	89,5
			O ports	86	86	86	86
		G	OE ports	195,3	197,7	200,2	203,1
			O ports	198,8	201,2	203,7	206,6
	75	A		350,5	355,4	360,4	366,2
		B		90	90	90	90
		C		209,75	212,2	214,7	217,6
		D		23	23	23	23
		E		13,75	13,75	13,75	13,75
		F	OE ports	93,5	93,5	93,5	93,5
			O ports	90	90	90	90
		G	OE ports	199,3	201,7	204,2	207,1
			O ports	209,75	212,2	214,7	217,6
	90	A		361,5	366,4	371,4	377,2
		B		95,5	95,5	95,5	95,5
		C		208,3	210,7	213,2	216,1
		D		23	23	23	23
		E		13,75	13,75	13,75	13,75
		F	OE ports	99	99	99	99
			O ports	95,5	95,5	95,5	95,5
		G	OE ports	204,8	207,2	209,7	212,6
			O ports	208,3	210,7	213,2	216,1

GR55 + GR38				2°					
				16	18	20	22	25	28
1°	50	A		337	340	343	346	350,5	355
		B		81,5	81,5	81,5	81,5	81,5	81,5
		C		196	197,5	199	200,5	202,8	205
		D		23	23	23	23	23	23
		E		15,9	15,9	15,9	15,9	15,9	15,9
		F		81,5	81,5	81,5	81,5	81,5	81,5
		G		196	197,5	199	200,5	202,8	205
	63	A		346	349	352	355	359,5	364
		B		86	86	86	86	86	86
		C		200	202	203,5	205	207,3	209,5
		D		23	23	23	23	23	23
		E		15,9	15,9	15,9	15,9	15,9	15,9
		F	OE ports	89,5	89,5	89,5	89,5	89,5	89,5
			O ports	86	86	86	86	86	86
		G	OE ports	197	198,5	200	201,5	203,8	206
			O ports	200	202	203,5	205	207,3	209,5

GR55 + GR38				2°					
				16	18	20	22	25	28
1°	75		A	354	357	360	363	367,5	372
			B	90	90	90	90	90	90
			C	204,5	206	207,5	209	211,3	213,5
			D	23	23	23	23	23	23
			E	15,9	15,9	15,9	15,9	15,9	15,9
		F	OE ports	93,5	93,5	93,5	93,5	93,5	93,5
			O ports	90	90	90	90	90	90
		G	OE ports	201	202.5	204	205,5	207,8	210
			O ports	204,5	206	207,5	209	211,3	213,5
	90		A	365	368	371	374	378,5	383
			B	95,5	95,5	95,5	95,5	95,5	95,5
			C	210	211,5	213	214,5	216,8	219
			D	23	23	23	23	23	23
			E	15,9	15,9	15,9	15,9	15,9	15,9
		F	OE ports	99	99	99	99	99	99
			O ports	95,5	95,5	95,5	95,5	95,5	95,5
		G	OE ports	206,5	208	209,5	211	213,3	215,5
			O ports	210	211,5	213	214,5	216,8	219

GR55 + GR47				2°					
				28	32	36	40	45	50
1°	50		A	376,5	380,5	384,5	388,5	393	398
			B	81,5	81,5	81,5	81,5	81,5	81,5
			C	217	219	221	223	225,3	227,8
			D	23	23	23	23	23	23
			E	19,5	19,5	19,5	19,5	19,5	19,5
			F	81,5	81,5	81,5	81,5	81,5	81,5
			G	217	219	221	223	225,3	227,8
	63		A	385,5	389,5	393,5	397,5	402	407
			B	86	86	86	86	86	86
			C	221,5	223,5	225,5	227,5	229,8	232,3
			D	23	23	23	23	23	23
			E	19,5	19,5	19,5	19,5	19,5	19,5
		F	OE ports	89,5	89,5	89,5	89,5	89,5	89,5
			O ports	86	86	86	86	86	86
		G	OE ports	218	220	222	224	226,3	228,8
			O ports	221,5	223,5	225,5	227,5	229,8	232,3
	75		A	393,5	397,5	401,5	405,5	410	415
			B	90	90	90	90	90	90
			C	225,5	227,5	229,5	231,5	233,8	236,3
			D	23	23	23	23	23	23
			E	19,5	19,5	19,5	19,5	19,5	19,5
		F	OE ports	93,5	93,5	93,5	93,5	93,5	93,5
			O ports	90	90	90	90	90	90
		G	OE ports	222	224	226	228	230,3	232,8
			O ports	204,5	206	207,5	209	211,3	213,5

SETTIMA® research & innovation, always

Grampelhuber GmbH | www.grampelhuber.at
A-4810 Gmunden/Österreich
T: +43 (0)7612-64902-0 office@grampelhuber.at

GR55 + GR47				2°					
				28	32	36	40	45	50
1°	90		A	404,5	408,5	412,5	416,5	421	426
			B	95,5	95,5	95,5	95,5	95,5	95,5
			C	231	233	235	237	239,3	241,8
			D	23	23	23	23	23	23
			E	19,5	19,5	19,5	19,5	19,5	19,5
		F	OE ports	99	99	99	99	99	99
			O ports	95,5	95,5	95,5	95,5	95,5	95,5
		G	OE ports	227,5	229,5	231,5	233,5	235,8	238,3
			O ports	231	233	235	237	239,3	241,8

GR55 + GR55				2°			
				50	63	75	90
1°	50		A	416	425	233	444
			B	81,5	81,5	81,5	81,5
			C	237,00	241,5	245,5	251
			D	23	23	23	23
			E	23	23	23	23
			F	81,5	81,5	81,5	81,5
			G	237,00	241,5	245,5	251
	63		A	425	434	442	453
			B	86	86	86	86
			C	241,5	246	250	255,5
			D	23	23	23	23
			E	23	23	23	23
		F	OE ports	89,5	89,5	89,5	89,5
			O ports	86	86	86	86
		G	OE ports	238	242,5	246,5	252
			O ports	241,5	246	250	255,5
	75		A	433	442	450	461
			B	90	90	90	90
			C	245,5	250	254	259,5
			D	23,00	23,00	23,00	23,00
			E	23,00	23,00	23,00	23,00
		F	OE ports	93,5	93,5	93,5	93,5
			O ports	90	90	90	90
		G	OE ports	242	246,5	250,5	256
			O ports	245,5	250	254	259,5
	90		A	444	453	461	472
			B	95,5	95,5	95,5	95,5
			C	251	255,5	259,5	265
			D	23,00	23,00	23,00	23,00
			E	23,00	23,00	23,00	23,00
		F	OE ports	99	99	99	99
			O ports	95,5	95,5	95,5	95,5
		G	OE ports	247,5	252	256	261,5
			O ports	251	255,5	259,5	265

Available flanges and shafts for GR55
Flange ed alberi disponibili per GR55

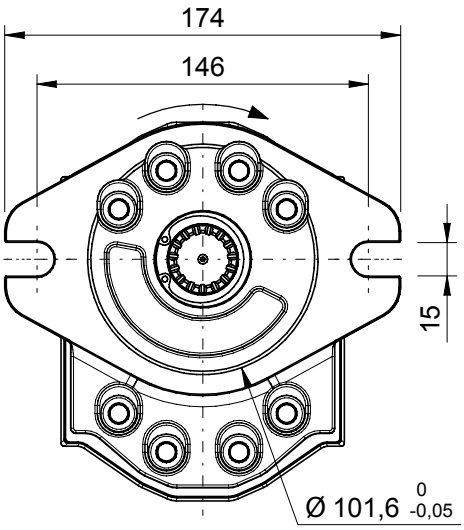

Type flange SAEB-T15
Flangia tipo SAEB-T15

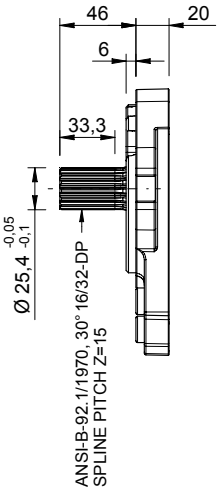

Type shaft SAEB-T15
Albero tipo SAEB-T15
Max torque */ Coppia max: 700 Nm*

SETTIMA research & innovation, always
Grampelhuber GmbH | www.grampelhuber.at
A-4810 Gmunden/Österreich
T: +43 (0)7612-64902-0 office@grampelhuber.at

GR72 - Group 4 tandem pumps

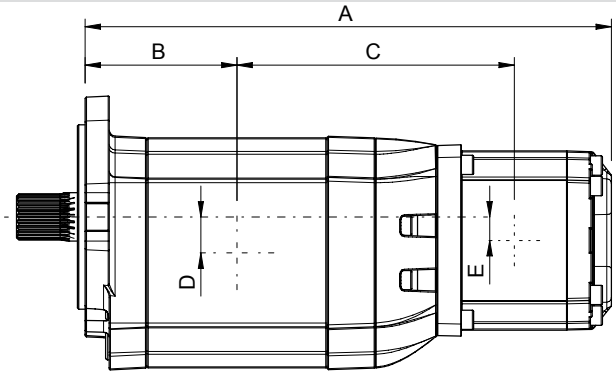

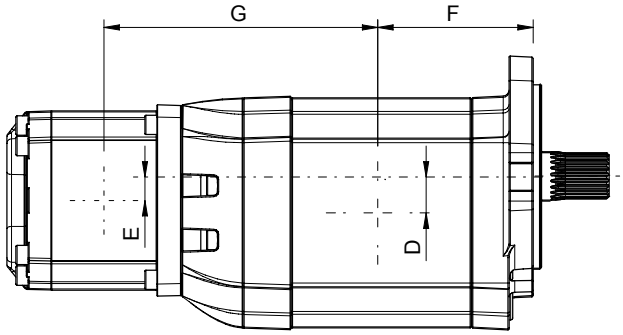

GR72 + GR47			2°					
			28	32	36	40	45	50
1°	94	A	429,5	433,5	437,5	441,5	446	451
		B	125,5	125,5	125,5	125,5	125,5	125,5
		C	226	228	230	232	234,3	236,8
		D	29,75	29,75	29,75	29,75	29,75	29,75
		E	19,50	19,50	19,50	19,50	19,50	19,50
		F	128,5	128,5	128,5	128,5	128,5	128,5
		G	223	225	227	229	231,3	233,8
	101	A	432,5	436,5	440,5	444,5	449	454
		B	127,00	127,00	127,00	127,00	127,00	127,00
		C	227,5	229,5	231,5	233,5	235,8	238,3
		D	29,75	29,75	29,75	29,75	29,75	29,75
		E	19,50	19,50	19,50	19,50	19,50	19,50
		F	134	134	134	134	134	134
		G	220,5	222,5	224,5	226,5	228,8	231,3
	125	A	442,5	446,5	450,5	454,5	459	464
		B	132,00	132,00	132,00	132,00	132,00	132,00
		C	232,5	234,5	236,5	238,5	240,8	243,3
		D	29,75	29,75	29,75	29,75	29,75	29,75
		E	19,50	19,50	19,50	19,50	19,50	19,50
		F	145	145	145	145	145	145
		G	219,5	221,5	223,5	225,5	227,8	230,3
	150	A	453	457	461	465	469,5	474,5
		B	137,3	137,3	137,3	137,3	137,3	137,3
		C	237,8	239,8	241,8	243,8	246	248,5
		D	29,75	29,75	29,75	29,75	29,75	29,75
		E	19,50	19,50	19,50	19,50	19,50	19,50
		F	150,3	150,3	150,3	150,3	150,3	150,3
		G	224,8	226,8	228,8	230,8	233	235,5
	175	A	463	467	471	475	479,5	484,5
		B	142,3	142,3	142,3	142,3	142,3	142,3
		C	242,8	244,8	246,8	248,8	251	253,5
		D	29,75	29,75	29,75	29,75	29,75	29,75
		E	19,50	19,50	19,50	19,50	19,50	19,50
		F	155,3	155,3	155,3	155,3	155,3	155,3
		G	229,8	231,8	233,8	235,8	238	240,5
	200	A	473,5	477,5	481,5	485,5	490	495
		B	147,50	147,50	147,50	147,50	147,50	147,50
		C	248	250	252	254	256,3	258,8
		D	29,75	29,75	29,75	29,75	29,75	29,75
		E	19,50	19,50	19,50	19,50	19,50	19,50
		F	155,3	155,3	155,3	155,3	155,3	155,3
		G	235	237	239	241	243,3	245,8

GR72 + GR55				2°			
				50	63	75	90
1°	94	A		447	456	464	475
		B		125,50	125,50	125,50	125,50
		C		235	239,5	243,5	249
		D		29,75	29,75	29,75	29,75
		E		23	23	23	23
		F		128,5	128,5	128,5	128,5
		G	O ports	232	236,5	240,5	246
			OE ports	232	240	244	249,5
	101	A		450	459	467	478
		B		127,00	127,00	127,00	127,00
		C		236,5	241	245	250,5
		D		29,75	29,75	29,75	29,75
		E		23	23	23	23
		F		134	134	134	134
		G	O ports	229,5	234	238	243,5
			OE ports	229,5	237,5	241,5	247
	125	A		460	469	477	488
		B		132,00	132,00	132,00	132,00
		C		241,5	246	250	255,5
		D		29,75	29,75	29,75	29,75
		E		23	23	23	23
		F		145	145	145	145
		G	O ports	228,5	233	237	242,5
			OE ports	228,5	236,5	240,5	246
	150	A		470,5	479,5	487,5	498,5
		B		137,3	137,3	137,3	137,3
		C		246,8	251,3	255,3	260,8
		D		29,75	29,75	29,75	29,75
		E		23	23	23	23
		F		150,3	150,3	150,3	150,3
		G	O ports	233,8	238,3	242,3	247,8
			OE ports	233,8	241,8	245,8	251,3
	175	A		480,5	489,5	497,5	508,5
		B		142,3	142,3	142,3	142,3
		C		251,8	256,3	260,3	265,8
		D		29,75	29,75	29,75	29,75
		E		23	23	23	23
		F		155,3	155,3	155,3	155,3
		G	O ports	238,8	243,3	247,3	252,8
			OE ports	238,8	246,8	250,8	256,3
	200	A		491	500	508	519
		B		147,50	147,50	147,50	147,50
		C		257	261,5	265,5	271
		D		29,75	29,75	29,75	29,75
		E		23	23	23	23
		F		160,5	160,5	160,5	160,5
		G	O ports	244	248,5	252,5	258
			OE ports	244	252	256	261,5

SETTIMA® research & innovation, always

Grampelhuber GmbH | www.grampelhuber.at
A-4810 Gmunden/Österreich
T: +43 (0)7612-64902-0 office@grampelhuber.at

GR72 + GR72			2°					
			94	100	125	150	175	200
1°	94	A	558,8	561,8	571,8	582,3	592,3	602,8
		B	125,5	125,5	125,5	125,5	125,5	125,5
		C	313,8	315,3	320,3	325,6	330,6	335,8
		D	29,75	29,75	29,75	29,75	29,75	29,75
		E	23	23	23	23	23	23
		F	128,5	128,5	128,5	128,5	128,5	128,5
		G	313,8	319,3	330,3	335,6	340,6	345,8
	100	A	561,8	564,8	574,8	585,3	595,3	605,8
		B	127	127	127	127	127	127
		C	315,3	316,8	321,8	327,1	332,1	337,3
		D	29,75	29,75	29,75	29,75	29,75	29,75
		E	23	23	23	23	23	23
		F	134	134	134	134	134	134
		G	311,3	316,8	327,8	333,1	338,1	343,3
	125	A	571,8	574,8	584,8	595,3	605,3	615,8
		B	132	132	132	132	132	132
		C	320,3	321,8	326,8	332,1	337,1	342,3
		D	29,75	29,75	29,75	29,75	29,75	29,75
		E	23	23	23	23	23	23
		F	145	145	145	145	145	145
		G	310,3	315,8	326,8	332,1	337,1	342,3
	150	A	582,3	585,3	595,3	605,8	615,8	626,3
		B	137,.3	137,.3	137,.3	137,.3	137,.3	137,.3
		C	325,6	327,1	332,1	337,3	342,3	347,6
		D	29,75	29,75	29,75	29,75	29,75	29,75
		E	23	23	23	23	23	23
		F	150,3	150,3	150,3	150,3	150,3	150,3
		G	315,6	321,1	332,1	337,3	342,3	347,6
	175	A	592,3	595,3	605,3	615,8	625,8	636,3
		B	142,3	142,3	142,3	142,3	142,3	142,3
		C	330,6	332,1	337,1	342,3	347,3	352,6
		D	29,75	29,75	29,75	29,75	29,75	29,75
		E	23	23	23	23	23	23
		F	155,3	155,3	155,3	155,3	155,3	155,3
		G	320,6	326,1	337,1	342,3	347,3	352,6
	200	A	602,8	605,8	615,8	626,3	636,3	646,8
		B	147,5	147,5	147,5	147,5	147,5	147,5
		C	335,8	337,3	342,3	347,6	352,6	357,8
		D	29,75	29,75	29,75	29,75	29,75	29,75
		E	23	23	23	23	23	23
		F	160,5	160,5	160,5	160,5	160,5	160,5
		G	325,8	331,3	342,3	347,6	352,6	357,8

Available flanges and shafts for GR72

Flange ed alberi disponibili per GR72

Type flange SAED-23T
Flangia tipo SAED-23T

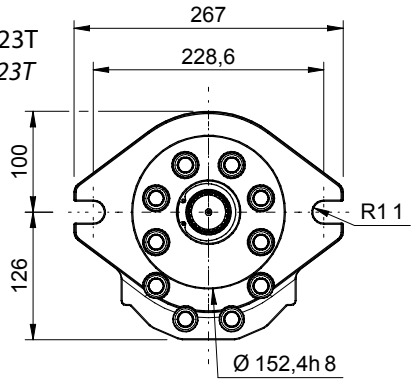

Type shaft SAED-23T
Albero tipo SAED-23T
Max torque / *Coppia max: 1200 Nm*

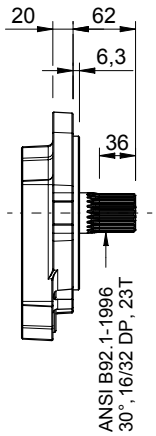

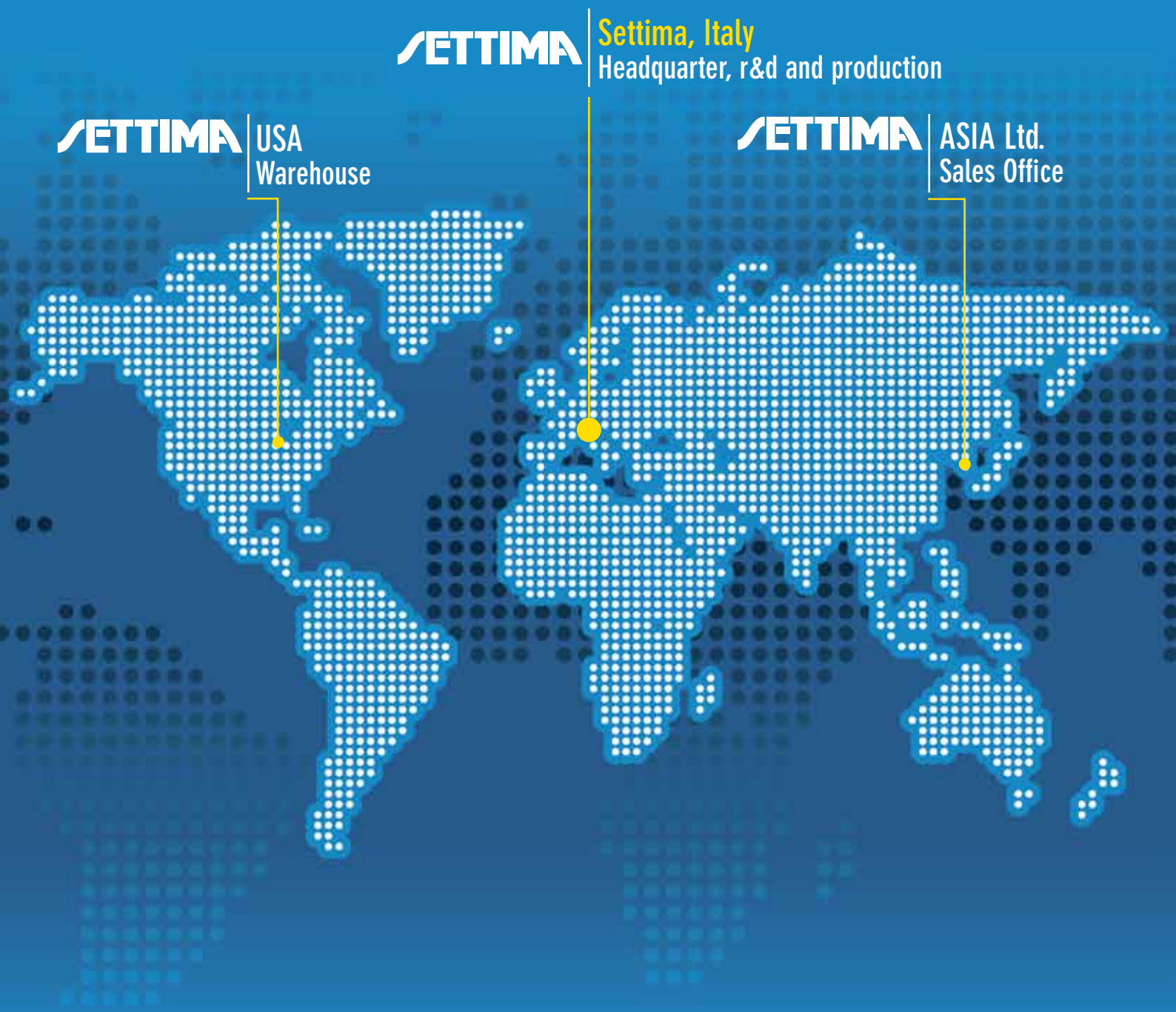

Settima Meccanica Srl
Settima - 29020 Piacenza (Italia)
tel. +39 0523.3650
fax +39 0523.3650299
www.settima.it
info@settima.it

SETTIMA
research & innovation, always

FEB2015

Grampelhuber GmbH | www.grampelhuber.at
A-4810 Gmunden/Österreich
T: +43 (0)7612-64902-0 office@grampelhuber.at