# Vickers® Vane Pumps

## Single and Double Vane Pumps

Model Series V10, V20, V2010, and V2020
for Industrial Equipment

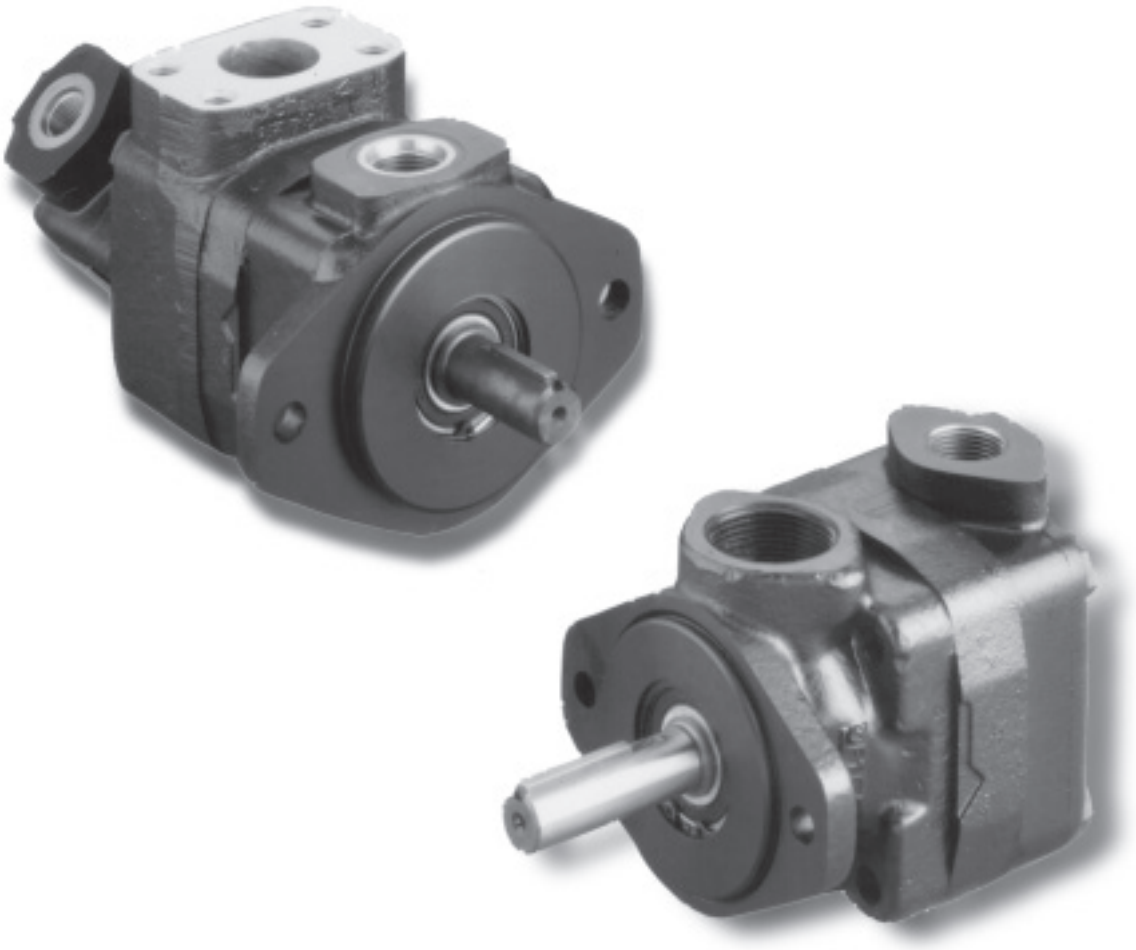

Powering Business Worldwide

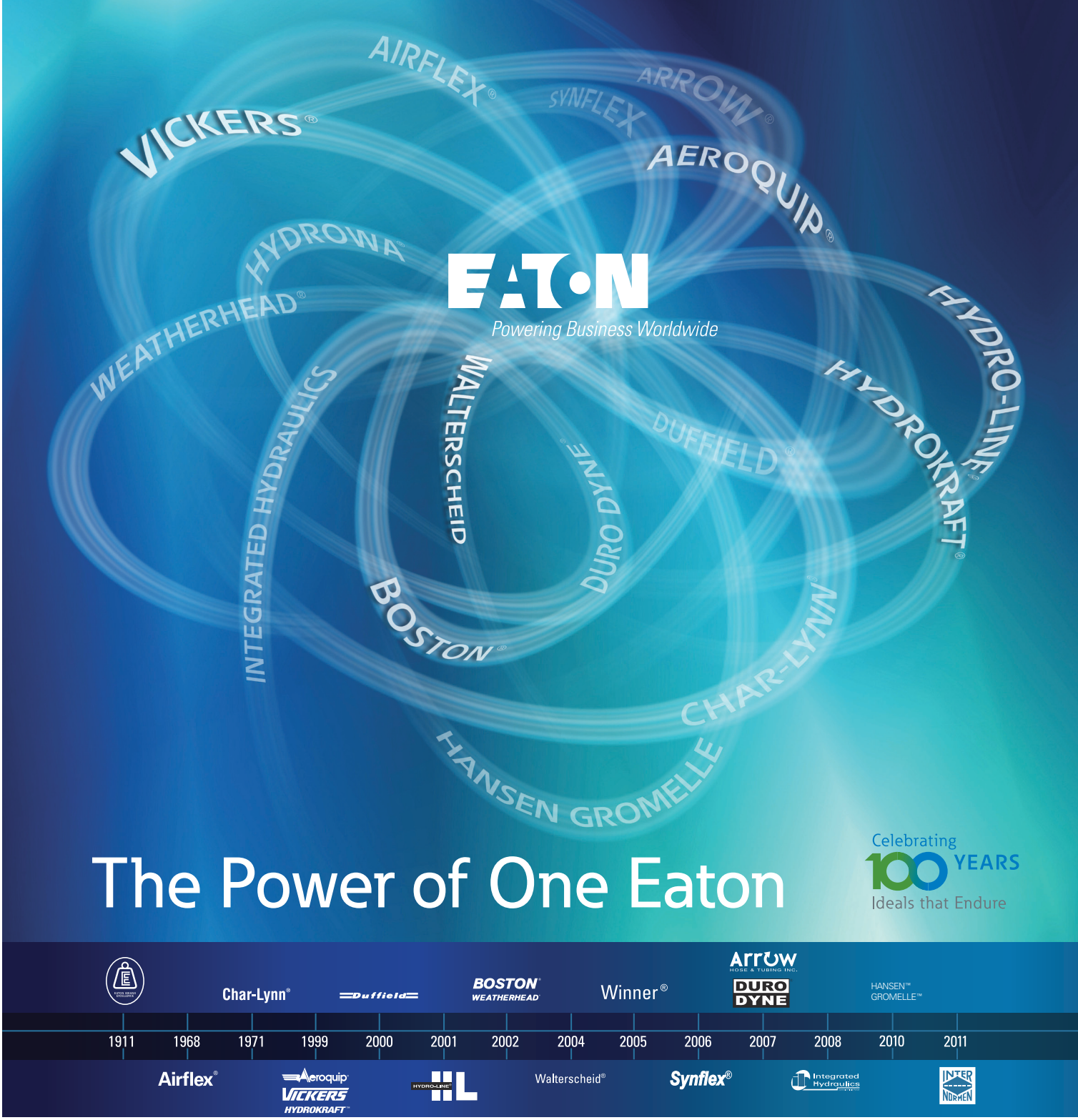


EATON
*Powering Business Worldwide*

There's a certain energy at Eaton. It's the power of integrating the competencies of some of the world's most respected names to build a brand you can trust to meet every power management need. The energy created supports our commitment to powering business worldwide.

As the world's demand for high-efficiency hydraulic systems for mobile and stationary applications increase, Eaton is helping to solve these challenges more reliably, efficiently, and sustainably. Our goal is simple; to provide unique solutions across a wide range of markets that keep businesses on the leading edge of change. Visit Eaton.com/hydraulics/fusion.

**That's the power of One Eaton.**

# Serving eight key segments - sharing one focus




### Alternative Energy

Making energy sources technically practical and economically sound requires the kind of control made possible by high-quality components. When Eaton is on the inside, you will experience the reliable, consistent performance to create and capture energy—making renewable energy an every-day energy.

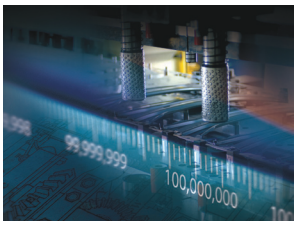


### Discrete Manufacturing

Produce at peak efficiency with the superior precision and repeatability of Eaton products. Eaton hydraulic components provide the precise control and consistent operation required for virtually every step in your manufacturing operation. With Eaton, we'll help you redefine the meaning of raw productivity.




### Oil & Gas

As the oil & gas industry continues to face further globalization and consolidation, large-scale organizations that can meet your needs in every corner of the world are more difficult to find. At Eaton, our portfolio of products is only surpassed by our tremendous reach.



### Processing

Whatever your industry, no matter which processes you manage, Eaton parts and systems help keep you up and running. Our components make equipment more efficient and easier to use, so you get optimal machine performance and maximum productivity.



### Agriculture & Forestry

There's a reason farming and forestry are called "working the land." These segments involve some of the hardest work and longest hours of any sector in the economy. Your productivity and profitability depend on the way you manage time and tasks.



### Commercial Vehicles

Eaton technologies can make your driving operation more successful. Greater comfort and productivity help increase driver retention, while reduced emissions, leaks, and noise improve environmental performance. Increased efficiencies overall mean lower costs and higher net revenue.



### Material Handling

Eaton hydraulic systems provide the precise control and consistent operation required for material handling and utility work. With a broad selection of products and solutions built in, Eaton helps make you a master of your domain.



### Construction & Mining

When you work on a large scale, even the details are big. You need to trust every part of the equipment that lets you handle construction and mining jobs. For reliable components that deliver consistent performance in extreme conditions, turn to Eaton.

# Eaton is a leading diversified power management company

Eaton provides reliable, efficient and safe power management for a growing number of industries.

**Understanding and helping our customers succeed**

- Listening and understanding to requirements and business drivers
- Delivering solutions with value propositions to solve the critical business needs

**Knowing what's important to our customers and integrating that knowledge into the fabric of our business**

- ...to deliver innovative, quality products
- ...to respond fast
- ...to provide dedicated customer service and support around the globe

**Our strength is global reach with local responsiveness and support**

- Customers served in more than 150 countries
- Diverse channels ensure reliable availability and support
- Design and engineering teams provide support for standard products and custom solutions
- Eaton experts offer efficient product and application training

# Introduction

Series V10, V20, V2010, and V2020 fixed displacement pumps are of Vickers "balanced vane type" construction. V10 and V20 single pumps have rated flow capacities of 1 to 7 USgpm and 6 to 13 USgpm, respectively.

Double pumps provide a single power source capable of serving two separate hydraulic circuits, or of providing greater volume through the combined delivery of both sections. In either type of application, two pumps in a single housing result in a more compact,simple installation and can be driven through a single shaft coupling.

V2010 double pumps have capacities of 6 to 13 USgpm and 1 to 7 USgpm for their shaft-end and cover-end pumps, respectively. V2020 double pumps have capacities of 6 to 13 USgpm and 6 to 11 USgpm for their shaft-end and cover-end pumps, respectively.

All models are designed for use with oil or synthetic fire-resistant fluids. Shaft rotation is either clockwise or counter-clockwise, but can be changed by changing the assembly of internal parts.

SAE 2-bolt mounting flanges are standard, and foot-mounting brackets are optional. Many electric motor manufacturers can supply drip-proof or totally enclosed, fan cooled motors with end bells on which the pumps can be mounted.

# Features and Benefits

**Enhanced Bearing Life**

Internal inlet and outlet pressure chambers are diametrically opposed. As a result, pressure-induced radial loads are balanced, and bearings have to carry the external load only.

**High Performance**

Low vane tip/ring loading allows high pressure operation. High speeds are possible because the inlet flow paths are designed to give uniform oil acceleration, and thus better filling characteristics, particularly at low inlet pressures.

**Extended Product Life**

The superior design of these pumps makes them last longer. They've proven they'll hold up in rugged applications.

**Low Cost**

Vickers' efficient design produces extra horsepower per dollar of pump investment, providing industry with low pump cost per horsepower capacity.

**Versatility**

High flow, pressure and speed capabilities enable these pumps to meet the hydraulic circuit needs of many types of modern machinery.

# Table of Contents

**Basic Performance Data – Single and Double Pumps**
Operating Characteristics at 1200 r/min with Petroleum Oil ..... 6
Maximum Speeds and Pressures Using Fire-resistant Fluids ..... 6
Speed Rating per Inlet Condition ..... 6
**Single Pumps - V10 and V20 Series**
Model Codes ..... 7
Specifications ..... 7
Performance Curves ..... 8
Dimensions ..... 13
**Double Pumps - V201 0 and V2020 Series**
Model Codes ..... 15
Specifications ..... 16
Performance Curves ..... 17
Dimensions ..... 21
**Foot Bracket Kits** ..... 23
**Application and Service Information** ..... 24

# Basic Performance Data – Single and Double Pumps

### Typical operating characteristics at 1200 r/min with petroleum oil

| Ring size | | Data based on performance at oil temperature of 49° C (120° F), viscosity 32 cSt at 38° C (150 SUS at 100° F) | | | | | | | |
|---|---|---|---|---|---|---|---|---|---|
| | | 7 bar (100 psi) | | 69 bar (1000 psi) | | 138 bar (2000 psi) | | 155 bar (2250 psi) | |
| V10 single pump † | V20 single pump ‡ | Lpm (USgpm) | Input kW (hp) | Lpm (USgpm) | Input kW (hp) | Lpm (USgpm) | Input kW (hp) | Lpm (USgpm) | Input kW (hp) |
| 1 | – | 3,8 (1) | 0,2 (.3) | 2,7 (.7) | 0,5 (.8) | 2,5 (.65) | 1 (1.4) | 2,3 (.6) | 1,2 (1.6) |
| 2 | – | 7,6 (2) | 0,2 (.3) | 6,8 (1.8) | 1,3 (1.75) | 6,4 (1.7) | 2,2 (3) | 6 (1.6) | 2,8 (3.8) |
| 3 | – | 11,4 (3) | 0,3 (.4) | 10,6 (2.8) | 1,6 (2.2) | 10,2 (2.7) | 3,3 (4.4) | 9,8 (2.6) | 3,7 (5) |
| 4 | – | 15,1 (4) | 0,3 (.4) | 14 (3.7) | 2,2 (3) | 13,6 (3.6) | 4,3 (5.8) | 13,2 (3.5) | 4,8 (6.5) |
| 5 | – | 18,9 (5) | 0,4 (.6) | 18,2 (4.8) | 2,7 (3.6) | 17,4 (4.6) | 5,2 (7) | 17 (4.5) | 5,8 (7.8) |
| 6 | – | 23,1 (6.1) | 0,7 (.9) | 21,6 (5.7) | 3,7 (5) | 20,4 (5.4) | 6,7 (9) | 20,1 (5.3) | 7,5 (10) |
| 7 | – | 27,2 (7.2) | 0,7 (1) | 25,7 (6.8) | 4,1 (5.5) | 24,6 (6.5) | 7,8 (10.4) | 23,8 (6.3) | 8,7 (11.6) |
| – | 6 | 23,5 (6.2) | 0,9 (1.25) | 20,1 (5.3) | 3,6 (4.9) | 19,7 (5.2) | 6,3 (8.4) | 19,3 (5.1) | 7,5 (10) |
| – | 7 | 26,9 (7.1) | 0,9 (1.25) | 25 (6.6) | 3,7 (5) | 23,5 (6.2) | 6,9 (9.2) | 23,1 (6.1) | 8,6 (11.5) |
| – | 8 | 31 (8.2) | 0,9 (1.25) | 28,8 (7.6) | 4,2 (5.6) | 27,2 (7.2) | 8,1 (10.9) | 26,9 (7.1) | 10,4 (14) |
| – | 9 | 34,8 (9.2) | 1 (1.3) | 32,6 (8.6) | 4,6 (6.2) | 31 (8.2) | 9 (12.1) | 30,7 (8.1) | 11,9 (16) |
| – | 11 | 43,5 (11.5) | 1 (1.3) | 37,8 (11) | 5,7 (7.6) | 39,7 (10.5) | 10,9 (14.6) | 39,4 (10.4) | 13 (17.5) |
| – | 12 | 45,4 (12) | 1 (1.3) | 43,2 (11.4) | 6,1 (8.2) | 40,9 (10.8) | 11,6 (15.6) | – | – |
| – | 13 | 51,1(13.5) | 1 (1.3) | 49,2 (13) | 6,6 (8.8) | 47,3 (12.5) | 12,4 (16.7) | – | – |

† Also cover-end ring of V2010 double pump .

‡ Also shaft-end ring of V2010 and V2020 double pumps, and cover-end ring (except sizes 12 & 13) of V2020 double pump.

NOTE: See curves for complete operating characteristics with petroleum oil. See page 8 for single pumps. See page 17 for double pumps

### Maximum speeds & pressures using fire-resistant fluids

| Ring size | Maximum speed by fluid type – r/min | | Maximum pressure by fluid type – bar (psi) | | |
|---|---|---|---|---|---|
| | Water-glycol and water-in-oil emulsion | Synthetic fluid | Water glycol | Water-in-oil emulsion | Synthetic fluid |
| 1, 2, 3, 4, 5 | 1800 | 1800 | 124 (1800) | 103 (1500) | 138 (2000) |
| 6, 7, 8, 9 | 1800 | 1800 | 124 (1800) | 109 (1575) | 138 (2000) |
| 11 | 1800 | 1500 | 109 (1575) | 93 (1350) | 138 (2000) |
| 12,13 | 1800 | 1500 | 109 (1575) | 93 (1350) | 124 (1800) |

NOTE: 3 inches of Hg is the maximum inlet vacuum for the maximum speeds above. See page 24 for complete application details.

### Speed rating per inlet condition

Maximum operating speeds shown on performance curves are for pumps operating at 0 psi inlet condition. To compute maximum operating speeds at other inlet conditions, use appropriate speed rating correction factor shown on the curve on the right.

Example:

| | |
|---|---|
| Max. speed @ 0 psi inlet | 2800 rpm |
| Correction factor @ 5 in. Hg | x .93 |
| Max. speed @ 5 in. Hg inlet | 2604 rpm |

Pump inlet suction should not exceed 5 in. Hg vacuum for petroleum oil or 3 in. Hg vacuum for other fluid types. Positive pressure on inlet should not exceed 10 psi.

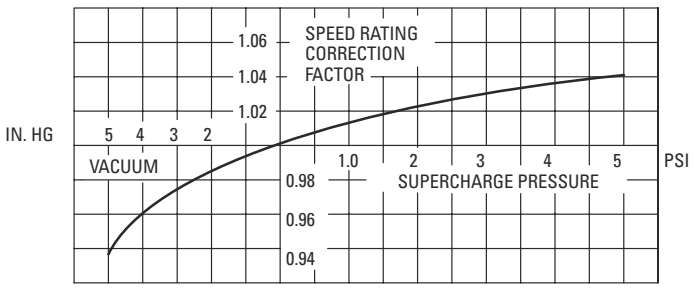

# Single Pumps

Model Code

**F3 - V 10 - 1 P 5 S - 1 C 20 L**

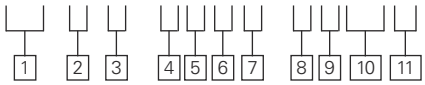


**1 Special Seals**
Omit if not required.
See page 25 for information on seals

**2 Vane pump**

**3 Series**
10 or 20

**4 Mounting**

1 – 2-bolt flange, 3.25" pilot (standard)
6 – 2-bolt flange, 4.00" pilot (optional)

See page 23 for optional foot bracket kits.

**5 Inlet port connections**

**P** –1" NPT thread (V10 only)
1 1/4" NPT thread (V20 only)
**S** –1.3125-12 straight thread (V10 only)
1.625-12 straight thread (V20 only)

**6 Ring size**
(Delivery at 1200 r/min and 100 psi)

V10 series
**1** – 1 USgpm
**2** – 2 USgpm
**3** – 3 USgpm
**4** – 4 USgpm
**5** – 5 USgpm
**6** – 6 USgpm
**7** – 7 USgpm

V20 series
**6** – 6 USgpm
**7** – 7 USgpm
**8** – 8 USgpm
**9** – 9 USgpm
**11** – 11 USgpm
**12** – 12 USgpm
**13** – 13 USgpm

**7 Outlet port connections**

**P** – 1/2" NPT thd. (V10 only)
**R** –1.1875–12 St. thd. (V20 only)
**S** – .750–16 St. thd. (V10 only)
1.0625–12 St. thd. (V20 only)

**8 Shafts**

**1** – Straight keyed
**11** – Splined
**38** – 11 Tooth – 3/4" OD.
**62** – Splined (V20 only)

**9 Position of outlet port**
(Viewed from cover end of pump)

**A** – Opposite inlet port
**B** – 90 CCW from inlet
**C** – In line with inlet
**D** – 90 CW from inlet

**10 Design**

**11** – V20 series
**20** – V10 series
Subject to change.

**11 Shaft rotation**
(Viewed from shaft end of pump)

**L** – Left hand (counterclockwise).
Omit for right hand.

**Specifications**

**Based on using petroleum oil at 49° C (120° F), viscosity 32 cSt at 38° C (150 SUS at 100° F), and 0 psi inlet pressure**

| Model series | Ring size | Displ. | Max. Speed | Maximum pressure | Typical delivery | Typical input power | Weight |
|---|---|---|---|---|---|---|---|
| | (Delivery USgpm @ 1200 r/min & 100 psi) | $cm^3/r$ ($in^3/r$) | r/min | bar (psi) | L/min (USgpm) @ max. speed & pressure | kW (hp) @ max. speed & pressure | kg (lb) |
| | 1 | 3,3 (.20) | 4800 | 172 (2500) | 13,6 (3.6) | 5,2 (7) | |
| | 2 | 6,6 (.40) | 4500 | 172 (2500) | 27,6 (7.3) | 10,1 (13.6) | |
| | 3 | 9,8 (.60) | 4000 | 172 (2500) | 35,6 (9.4) | 13,3 (17.8) | 4,5 - 6,8 |
| V10 | 4 | 13,1 (.80) | 3400 | 172 (2500) | 41,3 (10.9) | 15,2 (20.4) | (10 - 15) |
| | 5 | 16,4 (1.00) | 3200 | 172 (2500) | 48,5 (12.8) | 17 (22.8) | |
| | 6 | 19,5 (1.19) | 3000 | 152 (2200) | 55,3 (14.6) | 18,3 (24.5) | |
| | 7 | 22,8 (1.39) | 2800 | 138 (2000) | 60,6 (16) | 17,9 (24) | |
| | 6 | 19,5 (1.19) | 3400 | 172 (2500) | 60,9 (16.1) | 21,6 (29) | |
| | 7 | 22,8 (1.39) | 3000 | 172 (2500) | 63,2 (16.7) | 22 (29.5) | |
| | 8 | 26,5 (1.62) | 2800 | 172 (2500) | 67 (17.7) | 24,2 (32.5) | 7,3 - 8,2 |
| V20 | 9 | 29,7 (1.81) | 2800 | 172 (2500) | 75 (19.8) | 26,5 (35.5) | (16 - 18) |
| | 11 | 36,4 (2.22) | 2500 | 172 (2500) | 86,7 (22.9) | 28 (37.5) | |
| | 12 | 39 (2.38) | 2400 | 152 (2200) | 87,1 (23) | 26,8 (36) | |
| | 13 | 42,4 (2.59) | 2400 | 152 (2200) | 98 (25.9) | 29,1 (39) | |

See page 6 for speed correction curve.

# Single Pumps

## V10 Performance

Oil temp. 49°C (120°F), viscosity 32 cSt (150 SUS) @ 38°C (100°F), inlet pressure zero

Size 1 & 3 rings

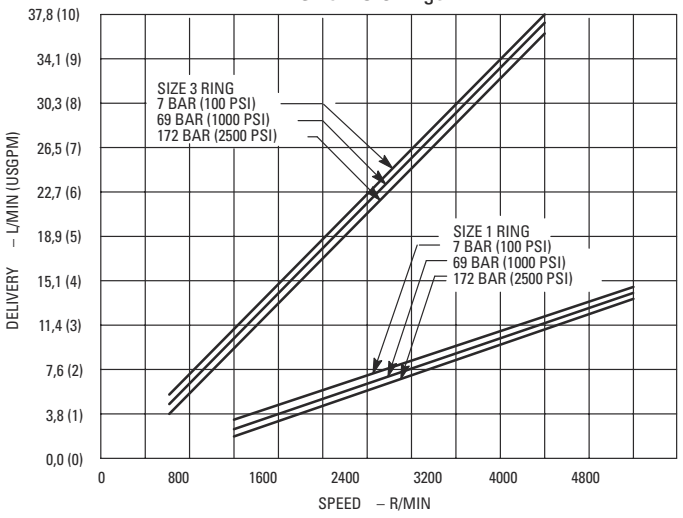


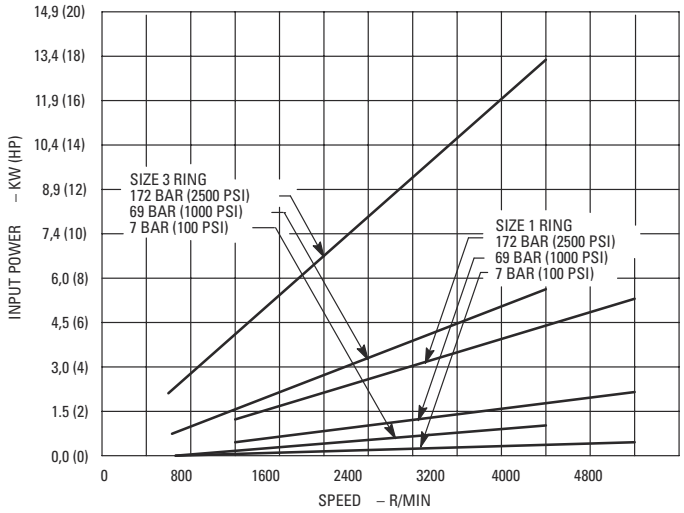

# Single Pumps

## V10 Performance

Oil temp. 49°C (120°F), viscosity 32 cSt (150 SUS) @ 38°C (100°F), inlet pressure zero

Size 2, 4 & 6 rings

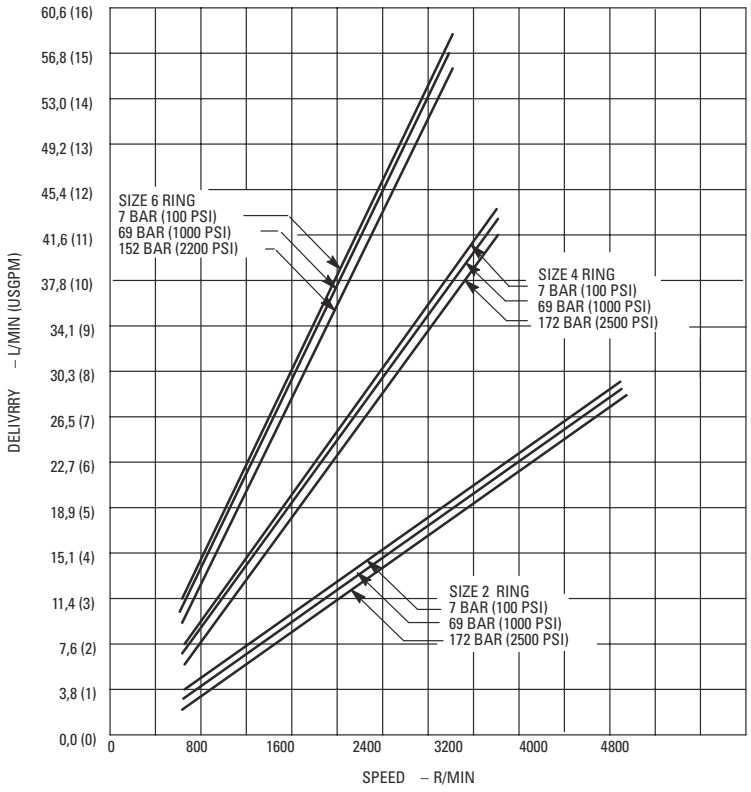


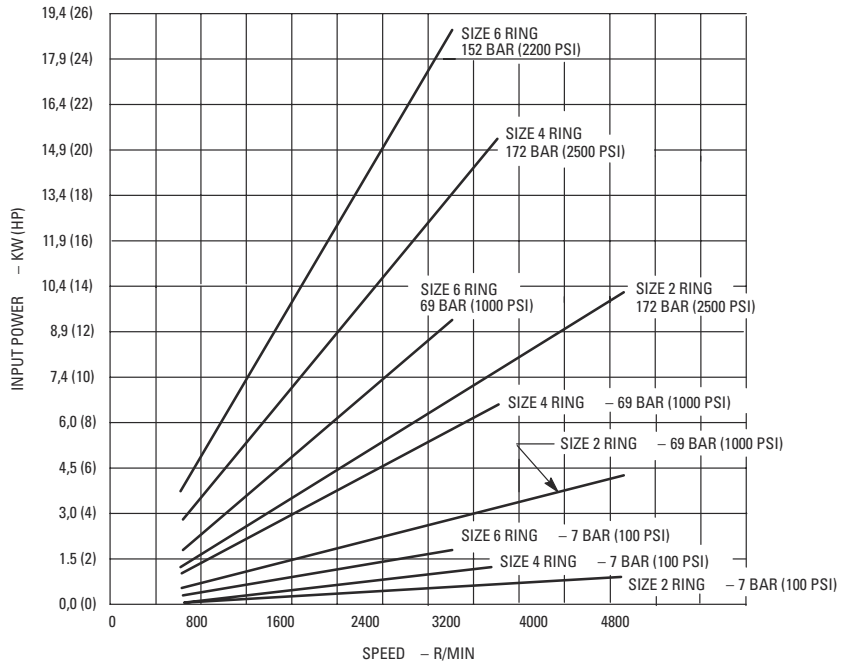

# Single Pumps

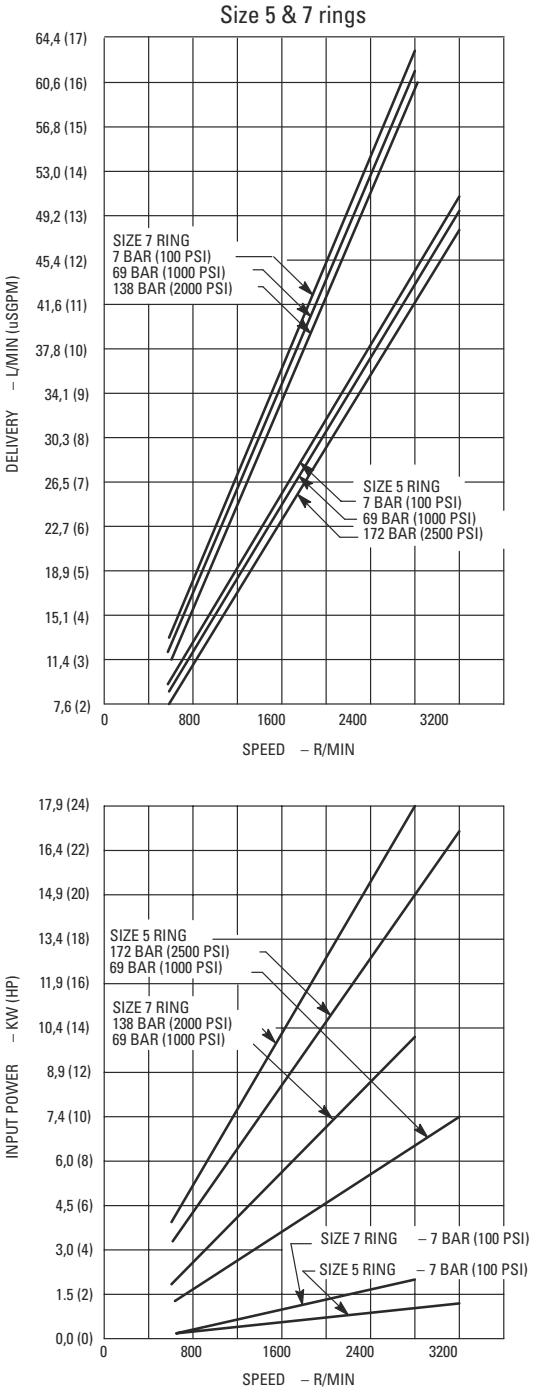

# Single Pumps

## V20 Performance

Oil temp. 49°C (120°F), viscosity 32 cSt (150 SUS) @ 38°C (100°F), inlet pressure zero

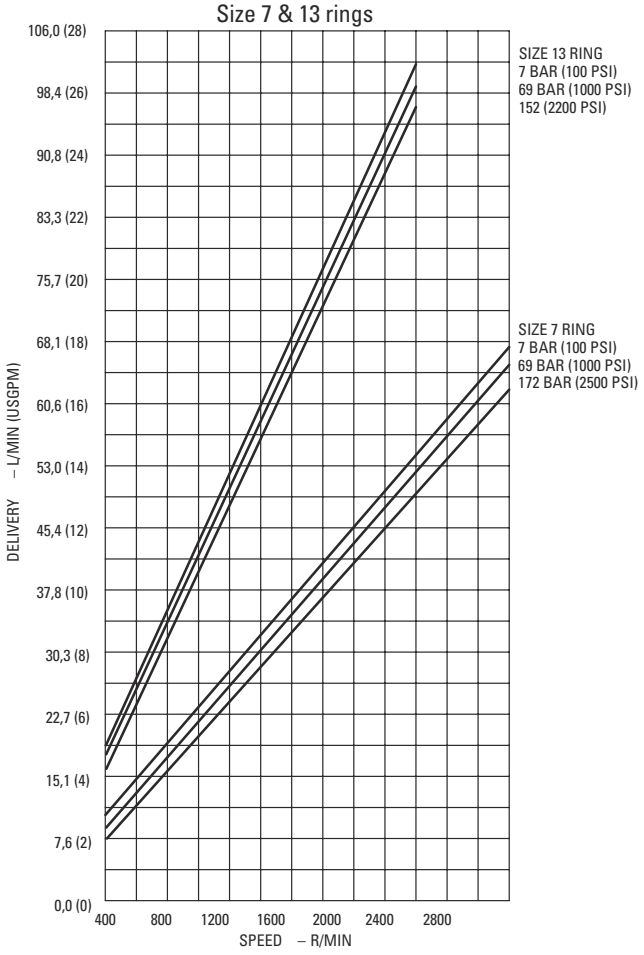


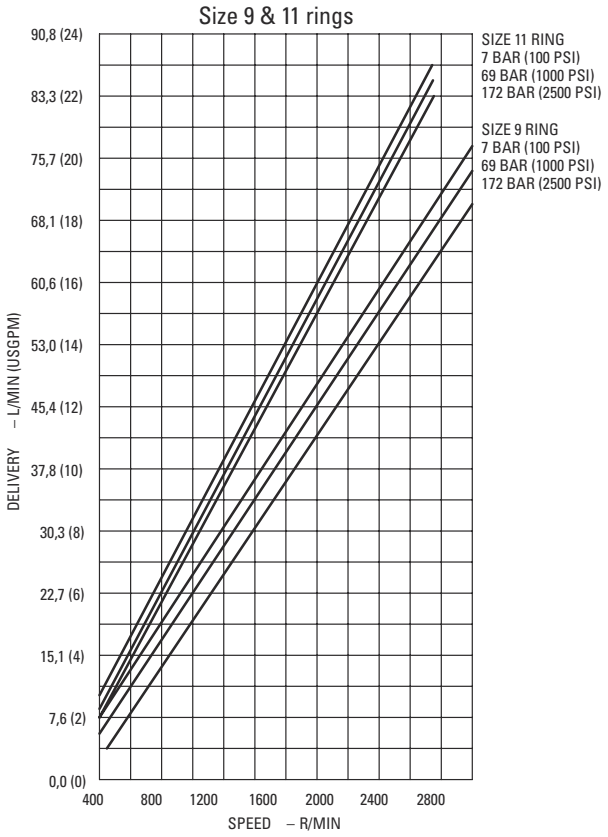


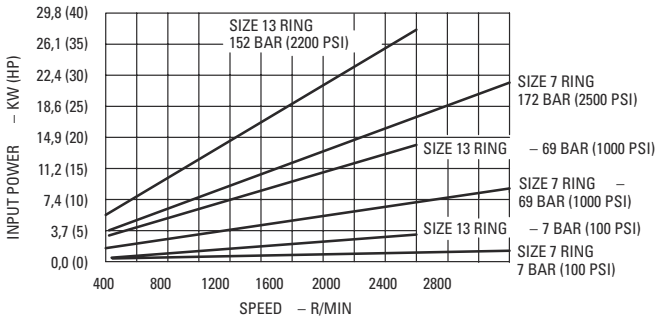


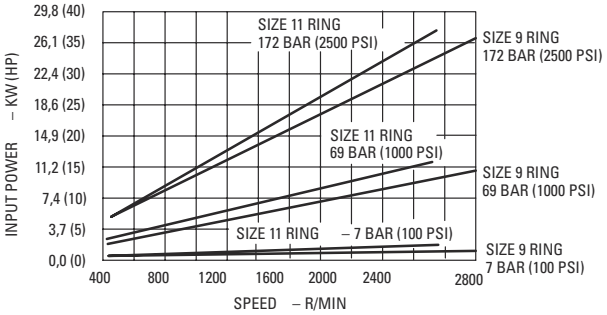

# Single Pumps

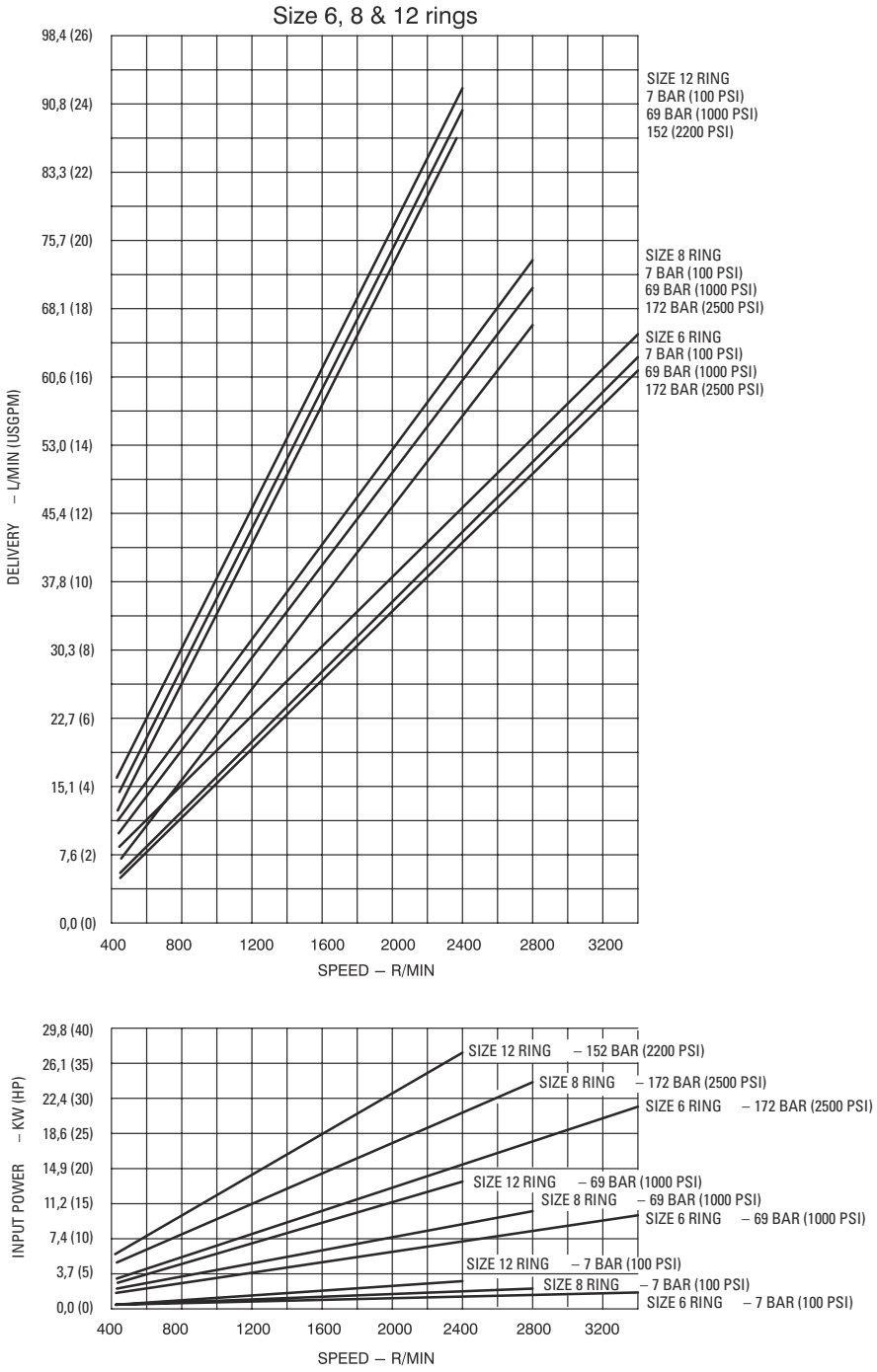

# Single Pumps

## V10 Dimensions

Millimeters (inches)

See page 23 for foot mounting dimensions.

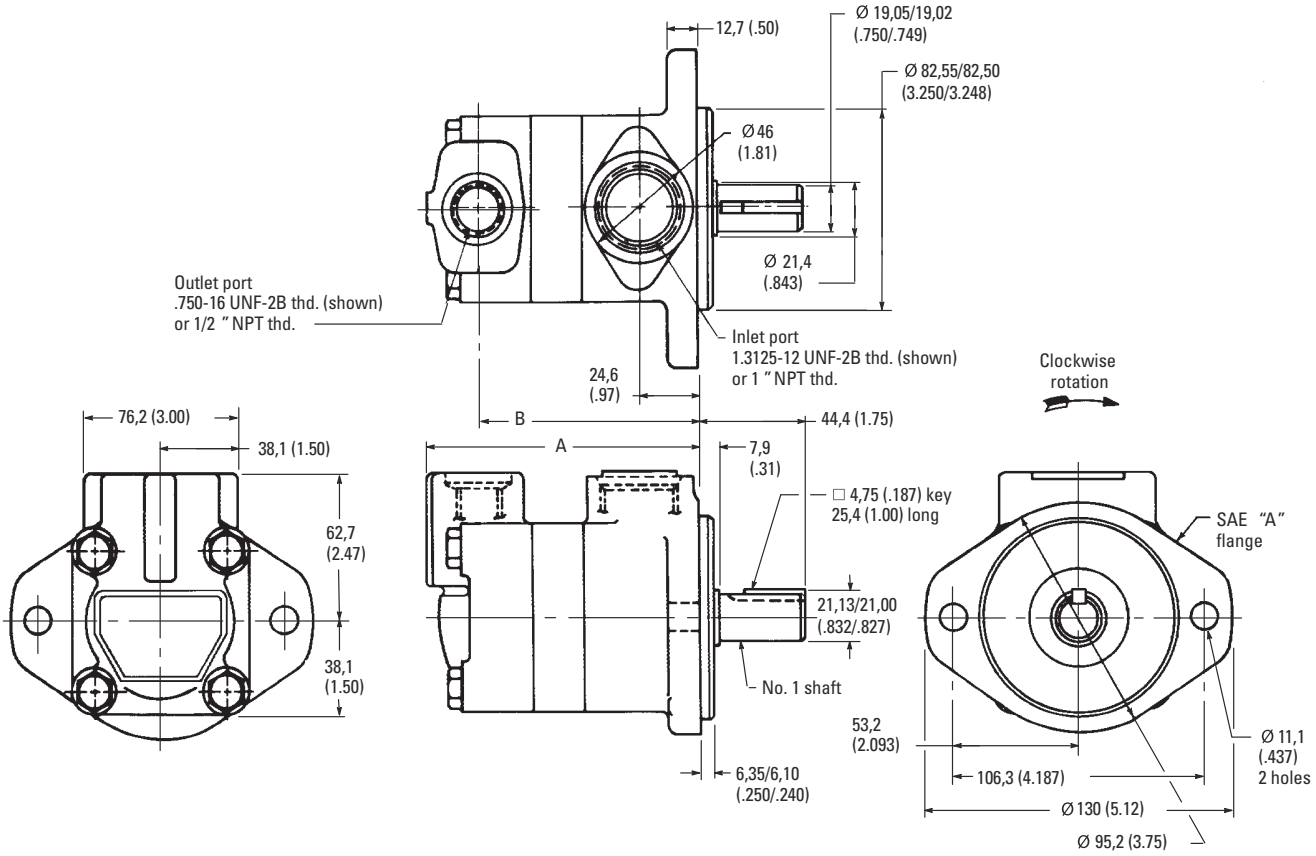


**Number 11 shaft**

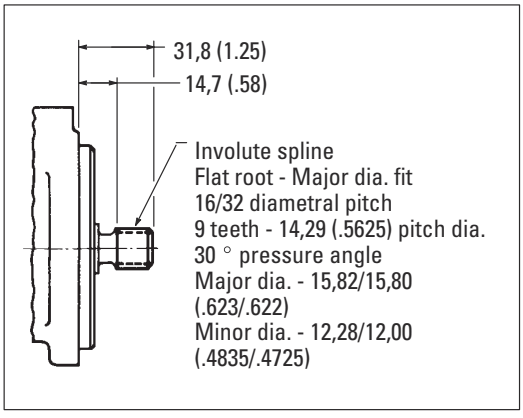


| Ring size | Dimension | |
|---|---|---|
| | A | B |
| 1 | 115,6 (4.55) | 91,9 (3.62) |
| 2 | 115,6 (4.55) | 91,9 (3.62) |
| 3 | 115,6 (4.55) | 91,9 (3.62) |
| 4 | 121,9 (4.80) | 98,3 (3.87) |
| 5 | 121,9 (4.80) | 98,3 (3.87) |
| 6 | 127,0 (5.00) | 103,4 (4.07) |
| 7 | 127,0 (5.00) | 103,4 (4.07) |

# Single Pumps

## V20 Dimensions

Millimeters (inches)

See page 23 for foot mounting dimensions.

| Ring size | Dimension | |
|---|---|---|
| | A | B |
| 6 | 125,2 (4.93) | 102,1 (4.02) |
| 7 | 131,6 (5.18) | 108,4 (4.27) |
| 8 | 131,6 (5.18) | 108,4 (4.27) |
| 9 | 131,6 (5.18) | 108,4 (4.27) |
| 11 | 136,6 (5.38) | 113,5 (4.47) |
| 12 | 140,2 (5.52) | 117,1 (4.61) |
| 13 | 140,2 (5.52) | 117,1 (4.61) |

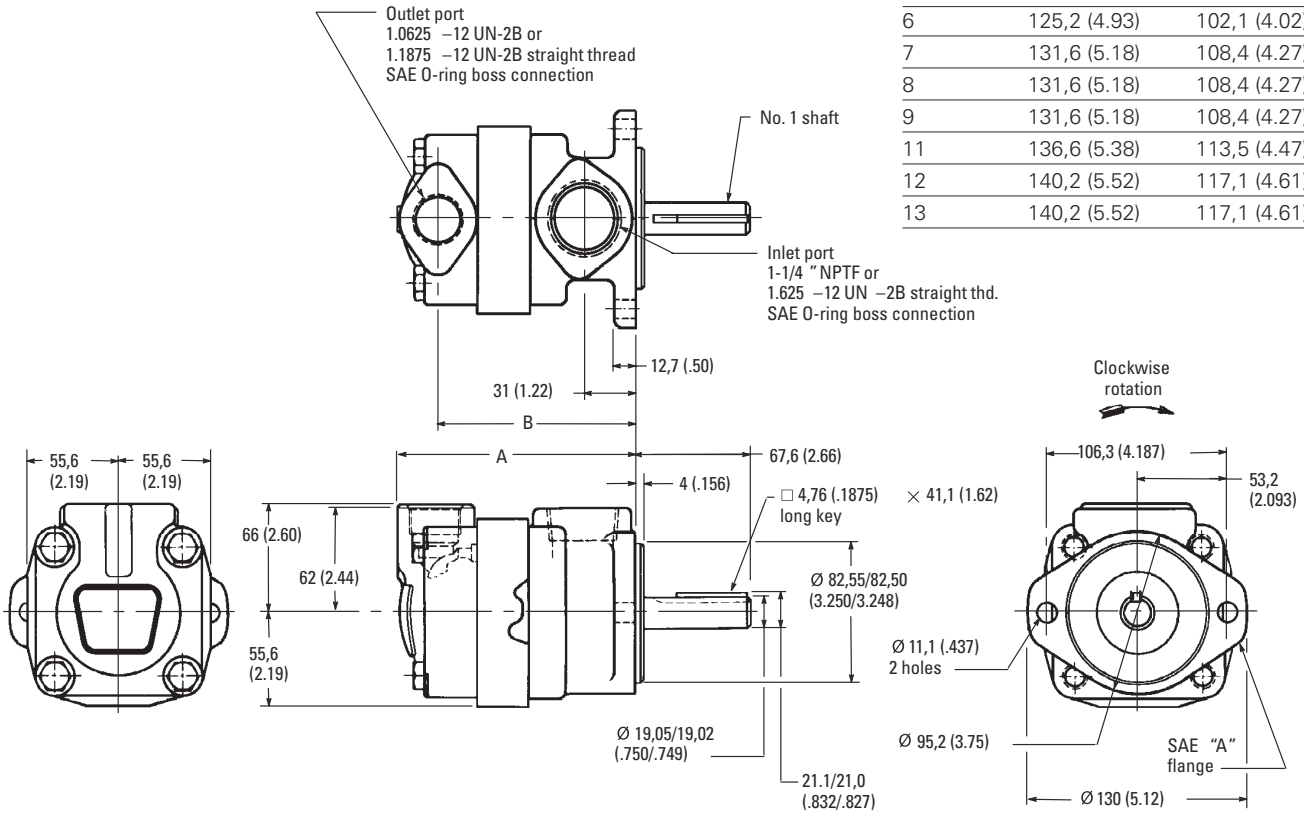


**Number 11 shaft**

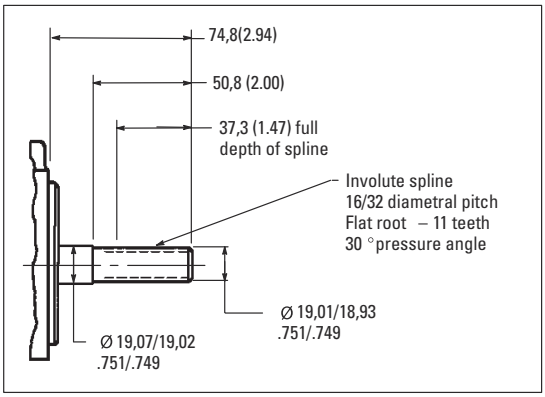


**Number 62 shaft**

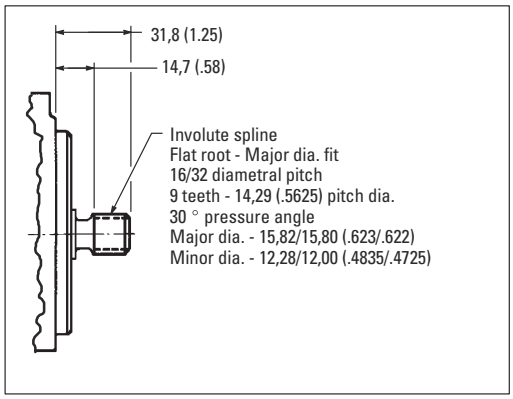

# Double Pumps

Model Codes

**F3 - V 2010 - 1 F 13 S 3 S - 1 CC - 12 - L**

1 2 3 4 5 6 7 8 9 10 11 12 13

1 **Special Seals**
Omit if not required.

See page 25 for information on seals.

2 **Vane pump**

3 **Series**
2010 or 2020

4 **Mounting**

**1** – 2-bolt flange, 4.00" pilot (standard)
**6** – 2-bolt flange, 3.25" pilot (optional)
See page 23 for optional foot bracket kits.

5 **Inlet port connections**

**F** – 4-bolt flange 1.50 dia. (V2010)
2.00 dia. (V2020)

6 **Shaft-end pump ring size**
(delivery at 1200 rpm & 100 psi)

**6** - 6 USgpm
**7** - 7 USgpm
**8** - 8 USgpm
**9** - 9 USgpm
**11** - 11 USgpm
**12** - 12 USgpm
**13** - 13 USgpm

7 **No. 1 outlet port (shaft end)**
**S** – 1.062-12 UN-2B thd.

8 **Cover-end pump ring size**
(delivery at 1200 r/inm and 100 psi)

**1** – 1 USgpm
**2** – 2 USgpm
**3** – 3 USgpm
**4** – 4 USgpm
**5** – 5 USgpm
**6** – 6 USgpm
**7** – 7 USgpm
V2010

**6** – 6 USgpm
**7** – 7 USgpm
**8** – 8 USgpm
**9** – 9 USgpm
**11** – 11 USgpm
V2020

9 **No. 2 outlet port (cover end)**

**S** – .750-16 St. Thd. (V2010)
1.062–12 St. Thd. (V2020)

10 **Shafts**

**1** – Straight keyed
**11** –Splined

11 **Position of outlet**
(Viewed from cover end of pump)

**V2010**
With no. 1 outlet opposite inlet
**AA** – No. 2 outlet 135° CCW from inlet
**AB** – No. 2 outlet 45° CCW from inlet
**AC** – No. 2 outlet 45° CW from inlet
**AD** – No. 2 outlet 135° CW from inlet

With no. 1 outlet 90° CCW from inlet
**BA** – No. 2 outlet 135 CCW from inlet
**BB** – No. 2 outlet 45 CCW from inlet
**BC** – No. 2 outlet 45 CW from inlet
**BD** – No. 2 outlet 135 CW from inlet

With no. 1 outlet in line with inlet
**CA** – No. 2 outlet 135° CCW from inlet
**CB** – No. 2 outlet 45° CCW from inlet
**CC** – No. 2 outlet 45° CW from inlet
**CD** – No. 2 outlet 135° CW from inlet

With no. 1 outlet 90° CW from inlet
**DA** – No. 2 outlet 135° CCW from inlet
**DB** – No. 2 outlet 45° CCW from inlet
**DC** – No. 2 outlet 45° CW from inlet
**DD** – No. 2 outlet 135° CW from inlet

**V2020**
With no. 1 outlet opposite inlet
**AA** – No. 2 outlet opposite inlet
**AB** – No. 2 outlet 90° CCW from inlet
**AC** – No. 2 outlet in line with inlet
**AD** – No. 2 outlet 90° CW from inlet

With no. 1 outlet 90° CCW from inlet
**BA** – No. 2 outlet opposite inlet
**BB** – No. 2 outlet 90° CCW from inlet
**BC** – No. 2 outlet in line with inlet
**BD** – No. 2 outlet 90° CW from inlet

With no. 1 outlet inline with inlet
**CA** – No. 2 outlet opposite inlet
**CB** – No. 2 outlet 90° CCW from inlet
**CC** – No. 2 outlet in line with inlet
**CD** – No. 2 outlet 90° CW from inlet

With no. 1 outlet 90° CW from inlet
**DA** – No. 2 outlet opposite inlet
**DB** – No. 2 outlet 90° CCW from inlet
**DC** – No. 2 outlet in line with inlet
**DD** – No. 2 outlet 90° CW from inlet

12 **Design**

**12** – V2010 series
**30** – V2020 series
Subject to change.

13 **Shaft rotation**
(Viewed from shaft end of pump)

**L** – Left hand for counterclockwise
Omit for right hand

# Double Pumps

## Specifications

**Based on using petroleum oil at 49° C (120° F), viscosity 32 cSt at 38° C (150 SUS at 100° F), and 0 psi inlet pressure**

| V2010 model series | Ring size (Delivery USgpm @ 1200 r/min & 100 psi) | Displ. $cm^3/r$ ($in^3/r$) | Max. speed r/min | Maximum pressure bar (psi) | Typical delivery L/min (USgpm) @ max. speed & pressure | Typical input power kW (hp) @ max. speed & pressure | Approx. total weight kg (lb) |
|---|---|---|---|---|---|---|---|
| Shaft-end pump | 6 | 19,5 (1.19) | 3000 | 172 (2500) | 54,9 (14.5) | 18,3 (24.5) | 13,6 (30) |
| | 7 | 22,8 (1.39) | 3000 | 172 (2500) | 62,5 (16.5) | 22,4 (30) | |
| | 8 | 26,5 (1.62) | 2800 | 172 (2500) | 66,2 (17.5) | 24,2 (32.5) | |
| | 9 | 29,7 (1.81) | 2800 | 172 (2500) | 75,7 (20) | 26,8 (36) | |
| | 11 | 36,4 (2.22) | 2500 | 172 (2500) | 87,1 (23) | 28 (37.5) | |
| | 12 | 39 (2.38) | 2400 | 152 (2200) | 87,1 (23) | 26,8 (36) | |
| | 13 | 42,4 (2.59) | 2400 | 152 (2200) | 98,4 (26) | 29,1 (39) | |
| Cover-end pump | 1 | 3,3 (.20) | 3000 | 172 (2500) | 7,6 (2) | 3,4 (4.5) | |
| | 2 | 6,6 (.40) | 3000 | 172 (2500) | 17,8 (4.7) | 6,7 (9) | |
| | 3 | 9,8 (.60) | 3000 | 172 (2500) | 26,5 (7) | 10 (13.4) | |
| | 4 | 13,1 (.80) | 3000 | 172 (2500) | 36 (9.5) | 13,4 (18) | |
| | 5 | 16,4 (1.00) | 3000 | 172 (2500) | 45,4 (12) | 16 (21.5) | |
| | 6 | 19,5 (1.19) | 3000 | 152 (2200) | 54,9 (14.5) | 18,3 (24.5) | |
| | 7 | 22,8 (1.39) | 2800 | 138 (2000) | 60,6 (16) | 17,9 (24) | |

See page 6 speed correction curve.

| V2010 model series | Ring size (Delivery USgpm @ 1200 r/min & 100 psi) | Displ. $cm^3/r$ ($in^3/r$) | Max. speed r/min | Maximum pressure bar (psi) | Typical delivery L/min (USgpm) @ max. speed & pressure | Typical input power kW (hp) @ max. speed & pressure | Approx. total weight kg (lb) |
|---|---|---|---|---|---|---|---|
| Shaft-end pump | 12 | 39 (2.38) | 2400 | 152 (2200) | 87,1 (23) | 26,8 (36) | 15,9 (35) |
| | 13 | 42,4 (2.59) | 2400 | 152 (2200) | 98,4 (26) | 29,1 (39) | |
| Cover- or shaft-end pump | 6 | 19,5 (1.19) | 3000 | 172 (2500) | 54,9 (14.5) | 19,4 (26) | |
| | 7 | 22,8 (1.39) | 3000 | 172 (2500) | 62,5 (16.5) | 22,4 (30) | |
| | 8 | 26,5 (1.62) | 2800 | 172 (2500) | 66,2 (17.5) | 24,2 (32.5) | |
| | 9 | 29,7 (1.81) | 2800 | 172 (2500) | 75,7 (20) | 26,8 (36) | |
| | 11 | 36,4 (2.22) | 2500 | 172 (2500) | 87,1 (23) | 28 (37.5) | |

See page 6 speed correction curve.

# Double Pumps

## V2010 & V2020 Shaft-end Pump Performance

Oil temp. 49°C (120°F), viscosity 32 cSt (150 SUS) @ 38°C (100°F), inlet pressure zero

Size 8 & 12 rings

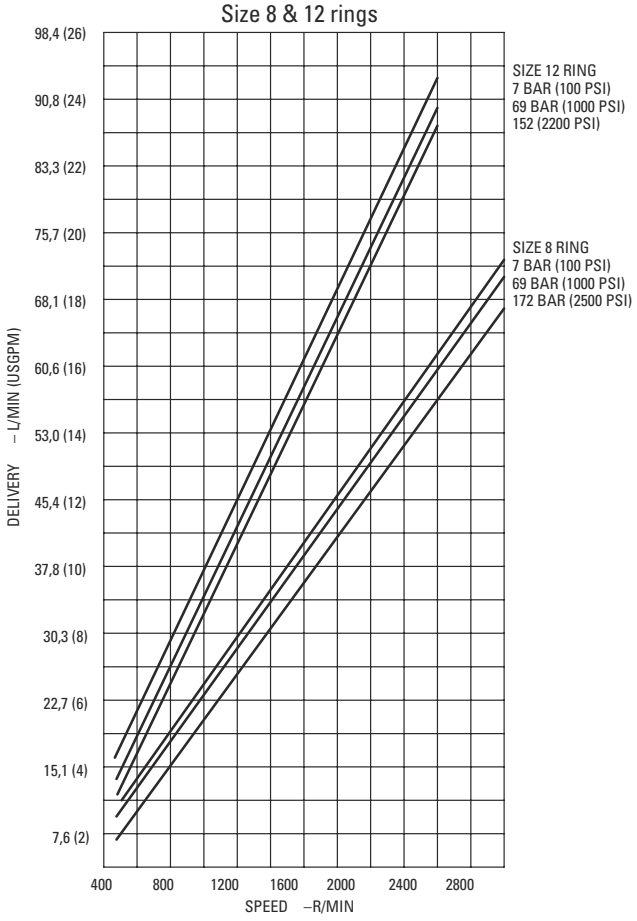


Size 7, 9, 11 & 13 rings

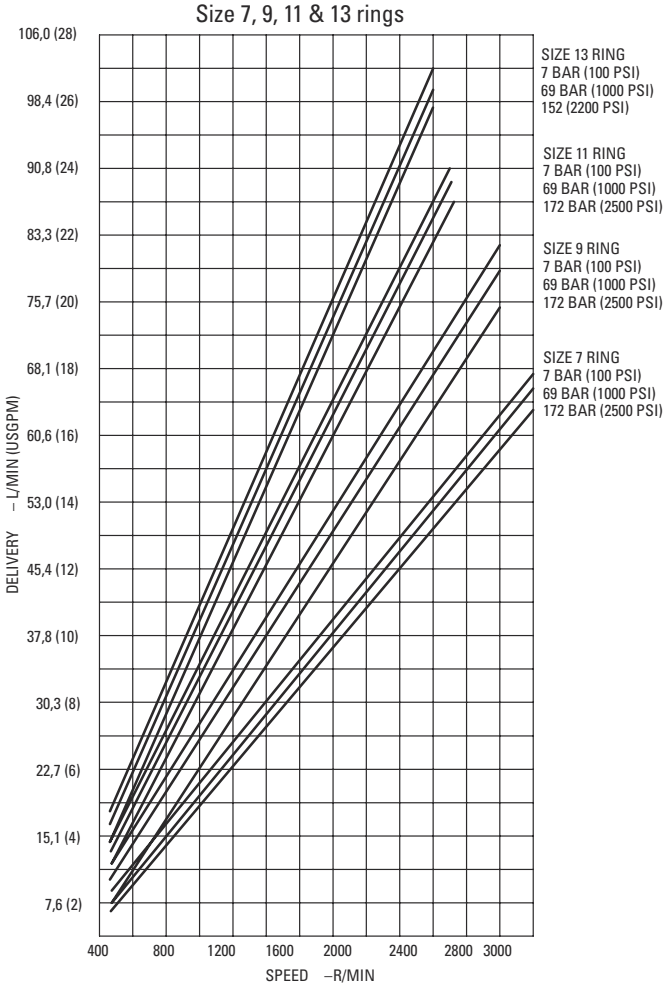


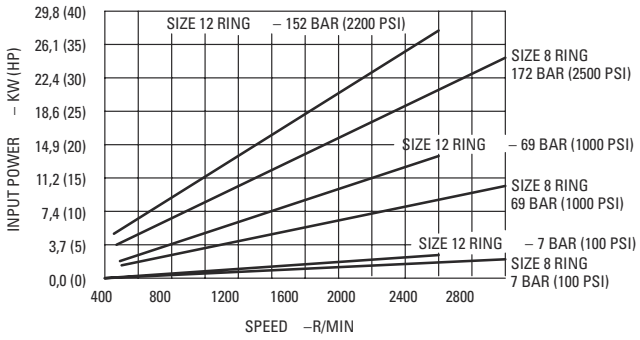


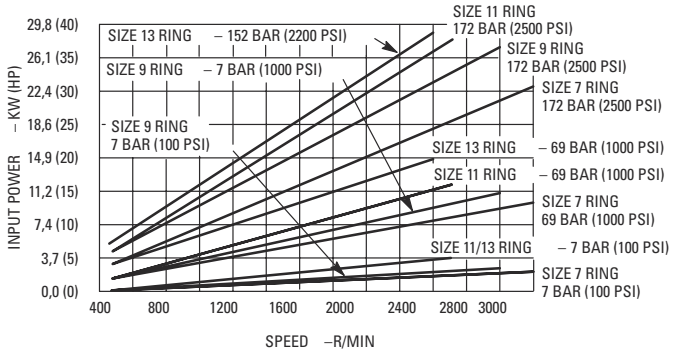

# Double Pumps

## V2010 Cover-end Pump Performance

Oil temp. 49°C (120°F), viscosity 32 cSt (150 SUS) @ 38°C (100°F), inlet pressure zero

Size 1 & 3 rings

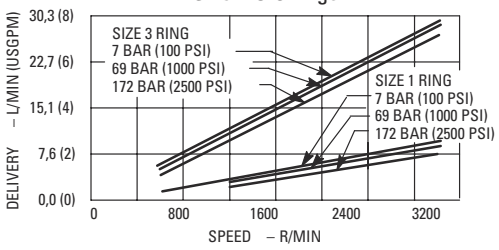


Size 2, 4 & 6 rings

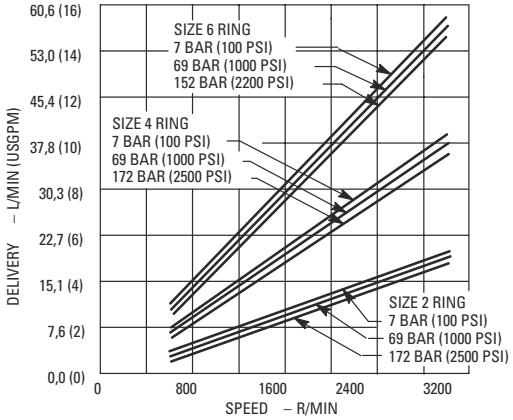


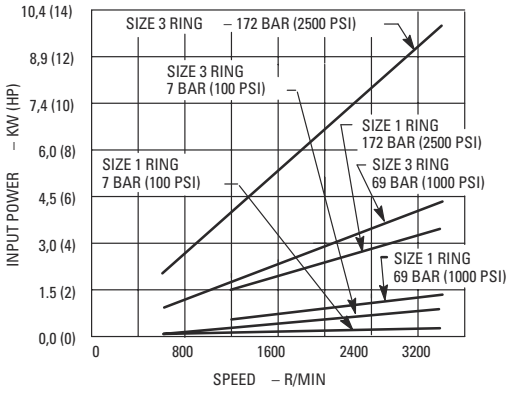


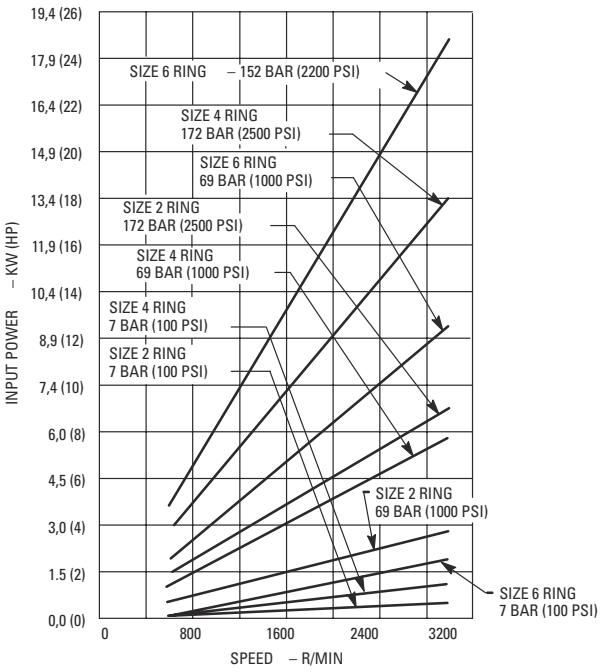

# Double Pumps

## V2010 Cover-end Pump Performance

Oil temp. 49°C (120°F), viscosity 32 cSt (150 SUS) @ 38°C (100°F), inlet pressure zero

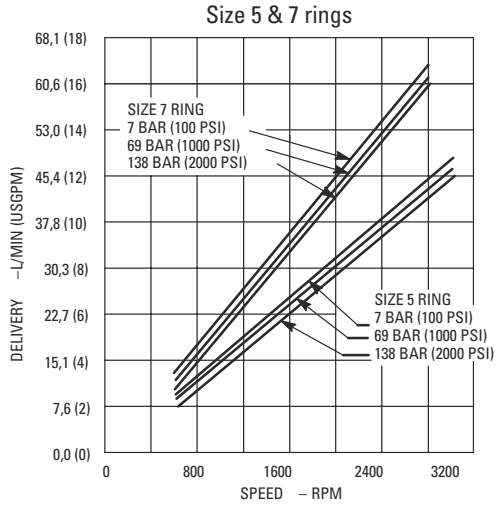


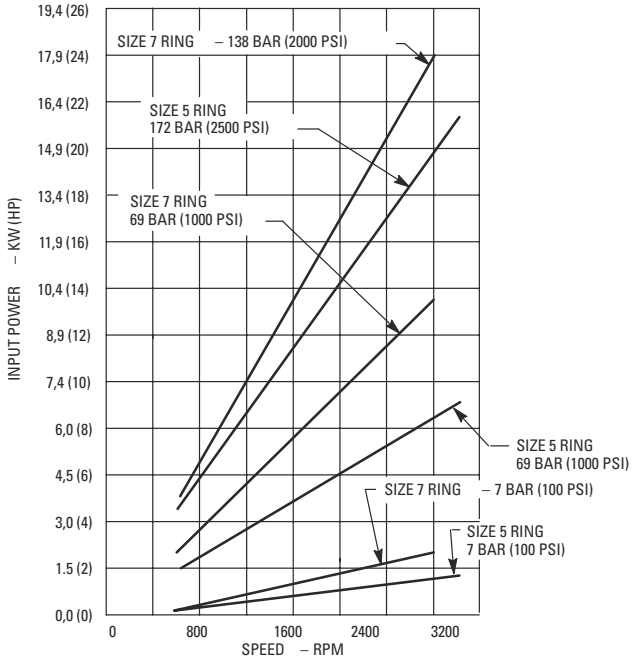

# Double Pumps

## V2020 Cover-end Pump Performance

Oil temp. 49°C (120°F), viscosity 32 cSt (150 SUS) @ 38°C (100°F), inlet pressure zero

Size 6 & 8 rings

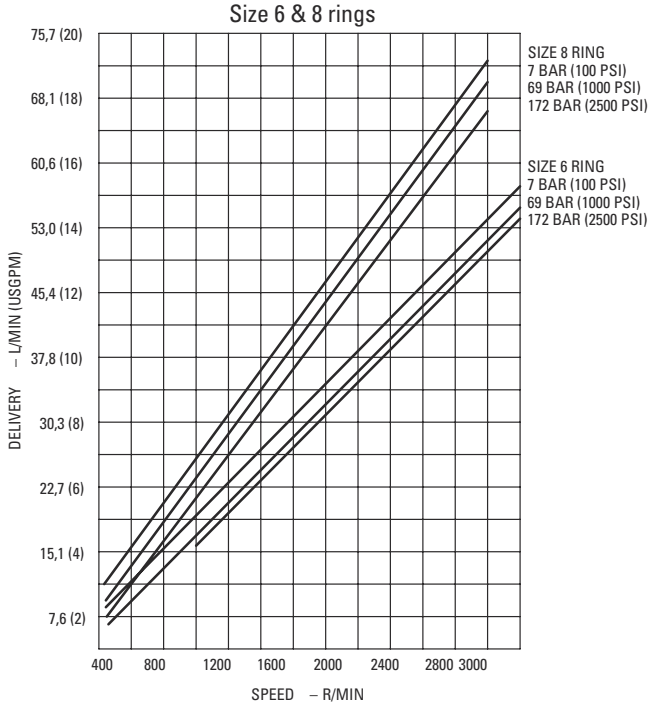


Size 7, 9, & 11 rings

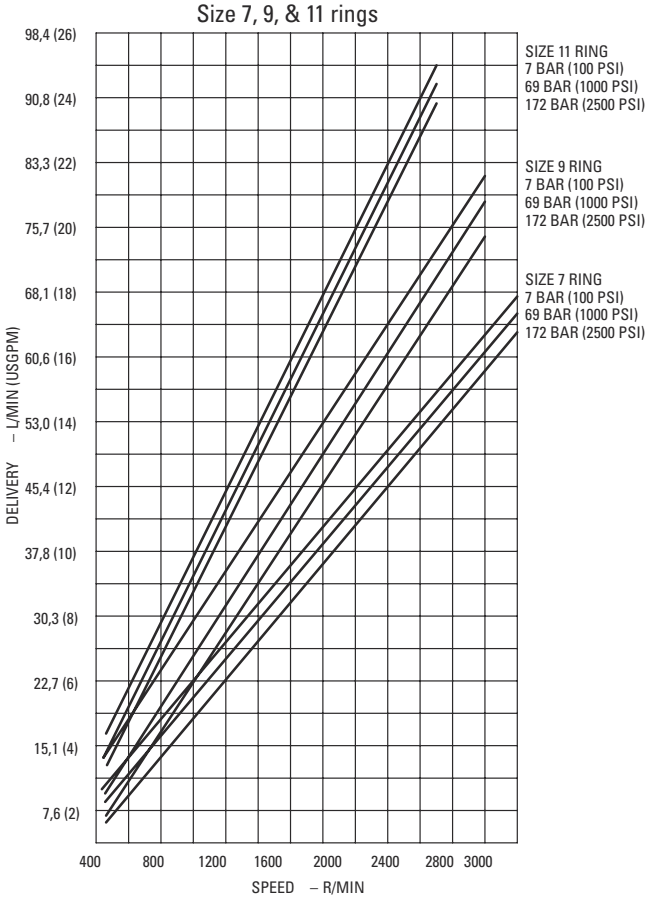


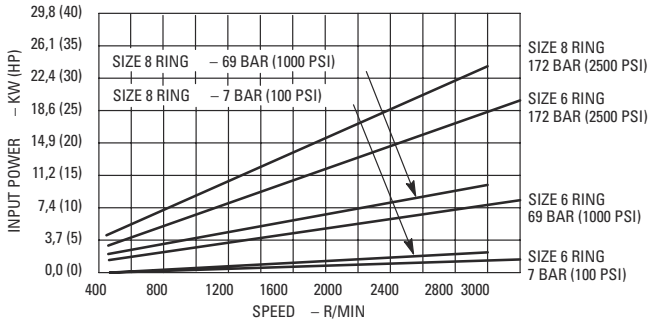


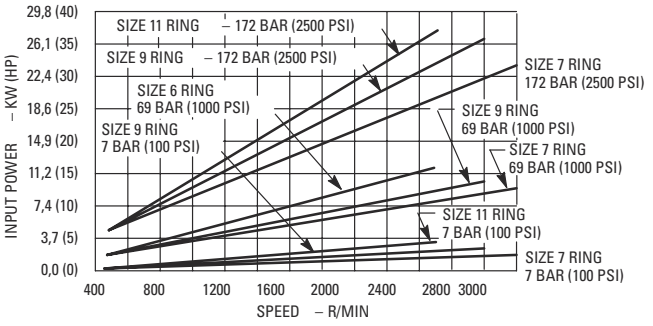

# Double Pumps

## V2010 Dimensions

Millimeters (inches)

See page 23 for foot mounting dimensions.

| Rated Delivery, gpm @ 1200 rpm & 100 psi | | Dimensions | | |
|---|---|---|---|---|
| **Shaft end** | **Cover end** | **A** | **B** | **C** |
| 7,8 or 9 | 1, 2 or 3 | 213,1 (8.39) | 189,2 (7.45) | 113,3 (4.46) |
| 7,8 or 9 | 4 or 5 | 219,5 (8.64) | 195,6 (7.70) | 113,3 (4.46) |
| 7,8 or 9 | 6 or 7 | 224,5 (8.84) | 200,7 (7.90) | 113,3 (4.46) |
| 11 | 1, 2 or 3 | 218,2 (8.59) | 194,3 (7.65) | 118,1 (4.65) |
| 11 | 4 or 5 | 224,5 (8.84) | 200,7 (7.90) | 118,1 (4.65) |
| 11 | 6 or 7 | 229,6 (9.04) | 205,7 (8.10) | 121,7 (4.79) |
| 12 or 13 | 1, 2 or 3 | 221,7 (8.73) | 197,9 (7.79) | 121,7 (4.79) |
| 12 or 13 | 4 or 5 | 227,8 (8.97) | 204,0 (8.03) | 121,7 (4.79) |
| 12 or 13 | 6 or 7 | 232,9 (9.17) | 209,0 (8.23) | 121,7 (4.79) |

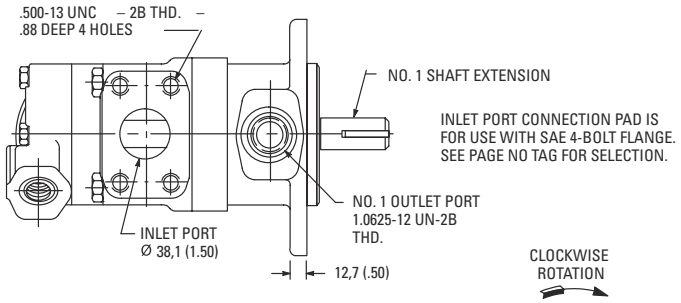


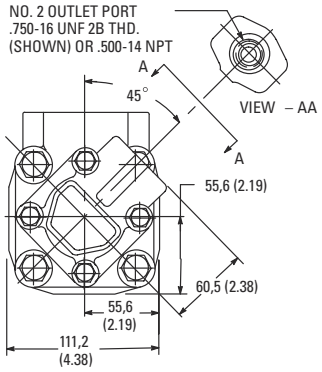


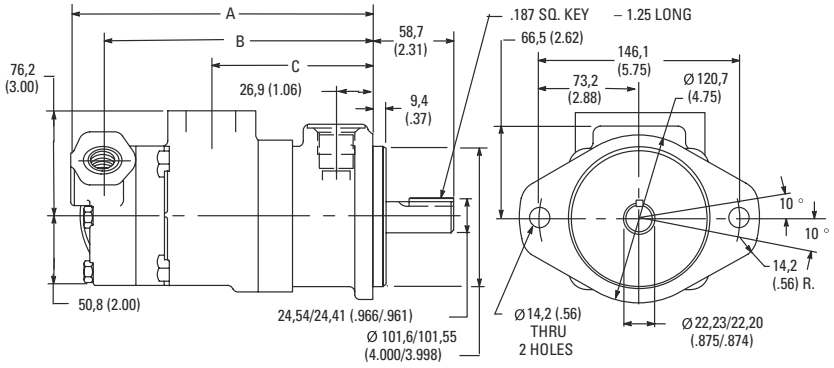


**Number 11 shaft**

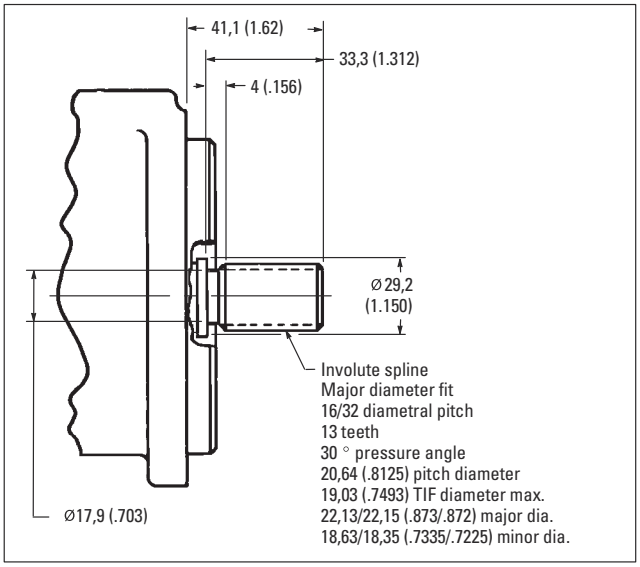

# Double Pumps

## V2020 Dimensions

Millimeters (inches)

See page 23 for foot mounting dimensions.

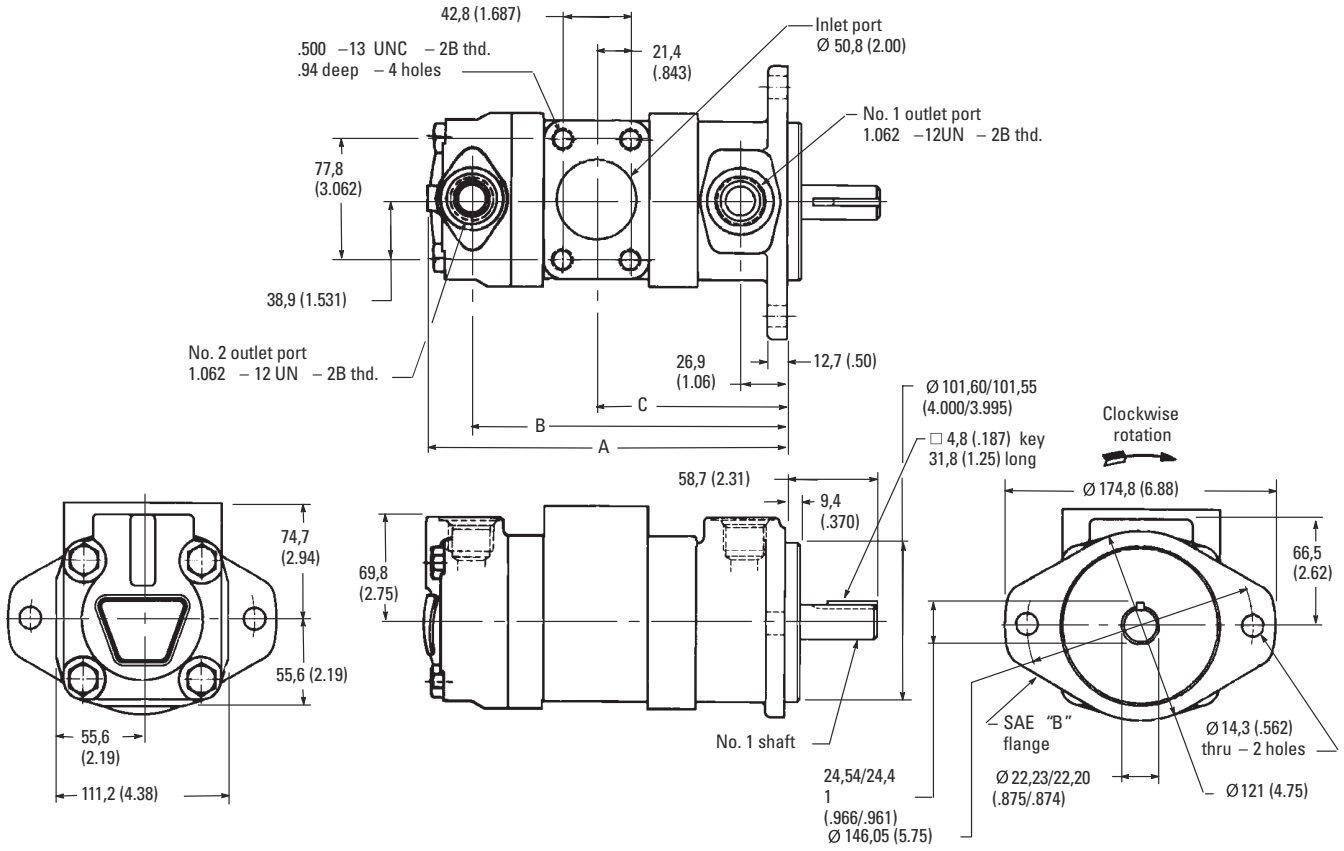


**Number 11 shaft**

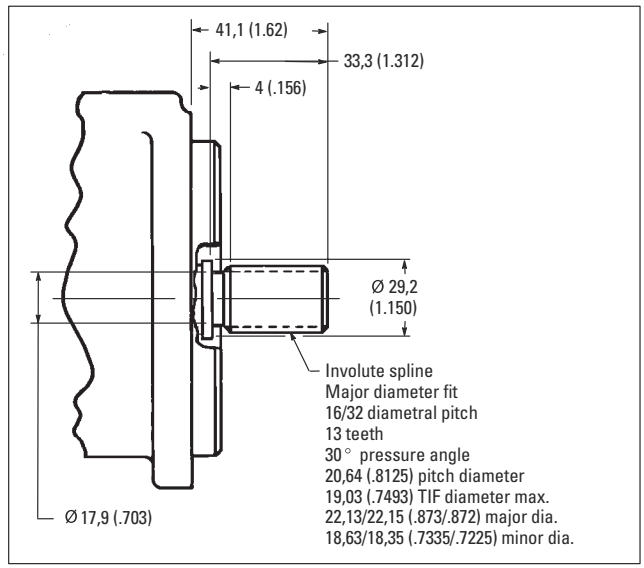


| Ring size | | Dimensions | | |
|---|---|---|---|---|
| **Shaft end** | **Cover end** | **A** | **B** | **C** |
| 7, 8 or 9 | 6 | 213,6 (8.41) | 187,7 (7.39) | 114 (4.49) |
| 7, 8 or 9 | 7, 8 or 9 | 220 (8.66) | 194 (7.64) | 114 (4.49) |
| 11 | 6 | 218,7 (8.61) | 192,8 (7.59) | 119,1 (4.69) |
| 11 | 7, 8 or 9 | 225 (8.86) | 199,1 (7.84) | 119,1 (4.69) |
| 11 | 11 | 229,9 (9.05) | 204 (8.03) | 119,1 (4.69) |
| 12 or 13 | 6 | 222,2 (8.75) | 196,3 (7.73) | 122,4 (4.82) |
| 12 or 13 | 7, 8 or 9 | 228,3 (8.99) | 202,4 (7.97) | 122,4 (4.82) |
| 12 or 13 | 11 | 233,4 (9.19) | 207,5 (8.17) | 122,4 (4.82) |

# Foot Bracket Kit

Dimensions

Millimeters (inches)

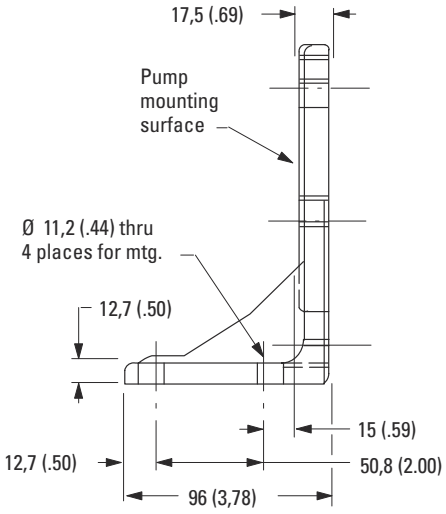


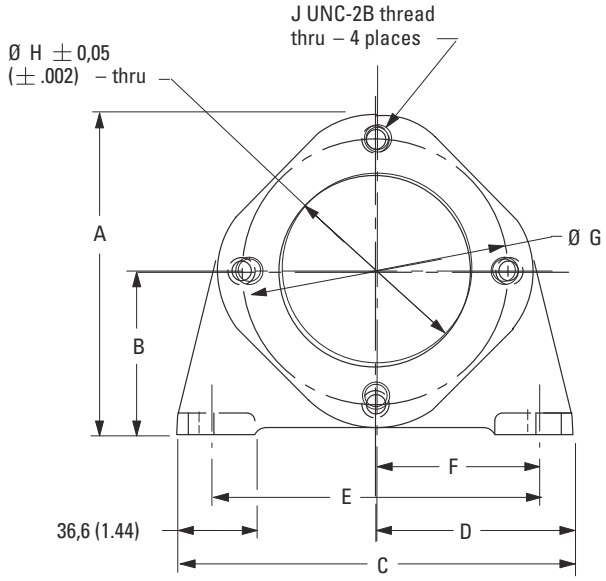


Note: Each kit includes screws for mounting pump to bracket.

| Model | A | B | C | D | E | F | øG | øH | J |
|---|---|---|---|---|---|---|---|---|---|
| FB-A-10 | 134,9 (5.31) | 69,8 (2.75) | 152,4 (6.00) | 76,2 (3.00) | 127,0 (5.00) | 63,5 (2.50) | 106,37 (4.188) | 82,63 (3.253) | .375-16 |
| FB-B-10 | 180,8 (7.12) | 92,2 (3.63) | 171,4 (6.75) | 85,7 (3.38) | 146,0 (5.75) | 73,1 (2.88) | 146,0 (5.75) | 101,68 (4.003) | .500-13 |

**Minimum Speed**

Minimum recommended starting speed is generally 600 r/min. However, the pump size, system characteristics and environmental conditions can raise or lower this speed. A lower speed can often be achieved after the pump has primed.

If low starting or operating speeds are required, consult your Vickers representative.

**Inlet Pressure**

Recommended inlet pressure is 0 to 0,34 bar (0 to 5 psi) gauge at maximum operating speeds. Inlet pressure should not exceed 0,69 bar (10 psi). Inlet depressions should not exceed 5 inches of Hg with petroleum oil, or 3 inches of Hg with all other fluids.

A pressurized reservoir system does not always assure a positive (supercharge) pressure at the pump inlet. Vacuum at the pump inlet can result during cold start-ups. Avoid high speeds until the circuit has warmed and supercharge pressure actually exists at the pump inlet.

**Drives**

Vickers pumps are designed for use on direct coaxial drives. If drives imposing radial or axial loads are being considered, consult your Vickers representative for additional information.

Concentricity and angular alignment of shafts are important to pump life. Misalignment can induce heavy loads on bearings, causing premature failure.

Flexible coupling halves must be aligned according to the coupling manufacturer's recommendations.

When using double universal joint couplings, the shafts must be parallel and the yokes must be in line. The offset should be kept as low as possible. Maximum allowable offset will, of course, vary with application conditions. The pump shaft to universal joint diametral fit should be close (major diameter fit) with no looseness.

**Mounting Dimensions**

Concentricity of the customer's female pilot diameter relative to the effective axis of the female drive must be within 0,10 mm (.004 in.) total indicator reading. The clearance between the male and female pilot diameters must be +0,01 to +0,05 mm (+.0005 to +.0020 in.).

The customer's mounting face to which the pump is affixed must be square to the axis of the female drive within 0,04 mm per mm (.0015 in. per in.).

Dimensions of the customer's keyed shaft receiver must be between +0,003 and +0,025 mm (+.0001 and +.0010 in.) of the maximum shaft diameter shown on the Vickers installation drawing.

**Valves and Circuitry**

Protect against hydraulic surge pressures (inlet or outlet) applied to or generated by the pump. Relief valves must prevent these surges from exceeding published pressure ratings.

Never assume a relief valve setting is the maximum pressure a pump experiences. Shock conditions may exist which can exceed circuit and pump limitations.

**Shaft Loading**

Never assume pumps in a double pump assembly can be simultaneously loaded to rated pressure. Shaft loading must be checked for excessive torque and side loads.

**Piping**

Hydraulic lines should be as short and have as large an inside diameter as possible. Where lines are long, it is desirable to adapt to a larger capacity line than a unit's ports specify. Inlet, outlet and drain lines should not be smaller than the nominal port size shown on installation drawings. A "Y" shaped inlet should not be used to feed two separate pumps because one may be starved and cavitate.

There should be as few bends and fittings in lines as possible. High-pressure lines and fittings are restrictive to flow and may result in excessive pressure drop through the system. They should be used only where necessary in a pressure line.

**Hose**

When installing a hose, allow enough slack to avoid kinking. A taut hose will not allow movement with pressure surges. Slack in the line compensates for surges, relieving strain. The hose should not be twisted during installation or while in operation. Twisting will weaken the hose and loosen connections.

A neater installation is usually obtainable by using extra fittings to minimize unusually long loops in a line. Hoses should be clamped to prevent rubbing and entanglement with moving parts. Where hoses are subject to chafing, they should be run through protective neoprene hose or shielded metallic guards.

### Hydraulic Fluids

Pumps can be used with anti-wear hydraulic oil, or automotive type crankcase oil (designations SC, SD, SE, SF, or SG) per SAE J183 JUN89. Fire-resistant fluids can also be used, but may require the use of special seals as explained in the following "Seals" section.

The viscosity range of petroleum oil, with the pump running, should be 13-54 cSt (70-250 SUS). The oil viscosity at 38° C (100° F) should be 32-48 cSt (150-225 SUS).

Fire-resistant fluids should have a viscosity as close as possible to that of petroleum oil as described above. A maximum specific gravity of 1.3 is suggested for fire-resistant fluids.

An operating temperature of 49° C (120° F) is recommended. The maximum temperature for oil should be 65° C (150° F), and the maximum for water-containing fluids should be 130° F.

For additional fluid and temperature information, refer to 694.

### Seals

Nitrile seals are standard and are suitable for use with petroleum, water-glycol, water-in-oil emulsion, polyolester, and high-water-base fluids. Phosphate ester fluids require the use of fluorocarbon seals, which are identified in model codes as an "F3" prefix.

### Fluid Cleanliness

Proper fluid condition is essential for long and satisfactory life of hydraulic components and systems. Hydraulic fluid must have the correct balance of cleanliness, materials and additives for protection against wear of components, elevated viscosity and inclusion of air.

Essential information on the correct methods for treating hydraulic fluid is included in Vickers publication 561; "Vickers Guide to Systemic Contamination Control," available from your local Vickers distributor or by contacting Vickers, Incorporated. Recommendations on filtration and the selection of products to control fluid condition are included in 561. Recommended cleanliness levels, using petroleum oil under common conditions, are based on the highest fluid pressure levels in the system and are coded in the chart below. Fluids other than petroleum, severe service cycles, or personnel safety considerations are cause for adjustment of these cleanliness codes. See Vickers publication 561 for exact details.

Vickers products, as any components, will operate with apparent satisfaction in fluids with higher cleanliness codes than those described. Other manufacturers will often recommend levels above those specified. Experience has shown, however, that life of any hydraulic components is shortened in fluids with higher cleanliness codes than those listed below. These codes have been proven to provide a long trouble-free service life for the products shown, regardless of the manufacturer.

| Product | System Pressure Level – bar (psi) | | |
|---|---|---|---|
| | **<70 ( <1000)** | **70-210 (1000-3000)** | **210+ (3000+)** |
| **Vane Pumps – Fixed** | **20/18/15** | **19/17/14** | **18/16/13** |
| Vane Pumps – Variable | 18/16/14 | 17/15/13 | |
| Piston Pumps – Fixed | 19/17/15 | 18/16/14 | 17/15/13 |
| Piston Pumps – Variable | 18/16/14 | 17/15/13 | 16/14/12 |
| Directional Valves | 20/18/15 | 20/18/15 | 19/17/14 |
| Pressure/Flow Control Valves | 19/17/14 | 19/17/14 | 19/17/14 |
| CMX Valves | 18/16/14 | 18/16/14 | 17/15/13 |
| Servo Valves | 16/14/11 | 16/14/11 | 15/13/10 |
| Proportional Valves | 17/15/12 | 17/15/12 | 15/13/11 |
| Cylinders | 20/18/15 | 20/18/15 | 20/18/15 |
| Vane Motors | 20/18/15 | 19/17/14 | 18/16/13 |
| Axial Piston Motors | 19/17/14 | 18/16/13 | 17/15/12 |
| Radial Piston Motors | 20/18/14 | 19/17/13 | 18/16/13 |

# Application and Service Information

**Aeration**

Reservoir and circuit design must prevent aeration of the fluid. Particular care must be used to employ joints, seals and gaskets that will not leak or deteriorate. This is especially important in low pressure and suction lines. Connections should always be tight to prevent air from entering the system.

It is best to use windows and sight glasses in the reservoir and inlet lines during prototype evaluation to determine whether significant amounts of air are present in the fluid. Any opaqueness or milky appearance of the fluid in the lines or reservoir indicates excessive aeration. Bubbles on the surface of the reservoir fluid may indicate that excessive aeration is present.

**Reservoir**

The oil level of the reservoir should be as high as possible above the pump suction line opening. All return lines should discharge near the tank bottom, always below the oil level, and as far from the pump inlet as possible.

Reservoirs should incorporate a sight gauge, dipstick or other means for easy checking of the oil level. Without these devices, the oil level often goes unchecked and, should a leak occur, the pump can be starved and damaged from loss of lubrication.

Preferably, reservoirs should be located above pumps. This creates a flooded pump inlet which reduces the possibility of pump cavitation.

Pump suction and tank return lines should be attached to the reservoir by flanges or welded heavy-duty coupling. If the suction line is connected to the bottom of the reservoir, the coupling should extend above the bottom inside the tank. This prevents residual dirt from getting into the suction line when the tank is cleaned. The seals used on all suction line connections should be such that they will not deteriorate and leak.

A baffle plate in the reservoir is desirable to separate the suction and return lines. The plate causes return oil to circulate around the outer wall of the reservoir for cooling before it re-enters the pump. It also helps provide time for entrained air to separate from the oil. Baffle plate openings should be designed so that cascade effects and resultant air entrainment are minimized.

Most reservoirs are vented to the atmosphere through an opening that lets air leave or enter the space above the oil as the oil level rises or falls. A filler/breather unit containing an air filtering element is often used as the vent. It must be large enough to handle the air flow required to maintain atmospheric pressure whether the tank is full or empty.

**Startup**

Before starting, fill the pump with system fluid through the uppermost port. The housing must be kept full at all times to provide internal lubrication.

At initial startup, it may be necessary to bleed air from the pump outlet to permit priming and reduce noise. Bleed by loosening an outlet connection until a solid stream of fluid appears. An air bleed valve for this purpose is available through your Vickers representative.

**Application Guidance**

To ensure optimum pump performance in conjunction with your specific application, consult your Vickers representative if your:

- Application requires an indirect drive
- Fluid does not meet specifications
- Mounting attitude is other than horizontal
- Oil viscosity at operating temperature is not within 13-54cSt
- (70-250 SUS)
- Oil viscosity at startup is in excess of 220 cSt (1000 SUS)
- Needs require application assistance

**Service Information**

Refer to the following drawings for service parts information:

| Model Series | Drawing |
|---|---|
| V10 | M-2005-S |
| V20 | M-2004-S |
| V2010 | M-2255-S |
| V2020 | M-2256-S |

The overhaul manual for V10 and V20 models is I-3143-S.

Eaton
Hydraulics Group USA
14615 Lone Oak Road
Eden Prairie, MN 55344
USA
Tel: 952-937-9800
Fax: 952-294-7722
www.eaton.com/hydraulics

Eaton
Hydraulics Group Europe
Route de la Longeraie 7
1110 Morges
Switzerland
Tel: +41 (0) 21 811 4600
Fax: +41 (0) 21 811 4601

Eaton
Hydraulics Group Asia Pacific
Eaton Building
4th Floor, No. 3 Lane
280 Linhong Rd. Changning District
Shanghai 200335
China
Tel: (+86 21) 5200 0099
Fax: (+86 21) 5200 0400

Powering Business Worldwide

© 2011 Eaton Corporation
All Rights Reserved
Printed in USA
Document No. 698
November 2011