Proportional relief valves with integral pressure transducer

digital, pilot operated, closed loop high performances, rugged design

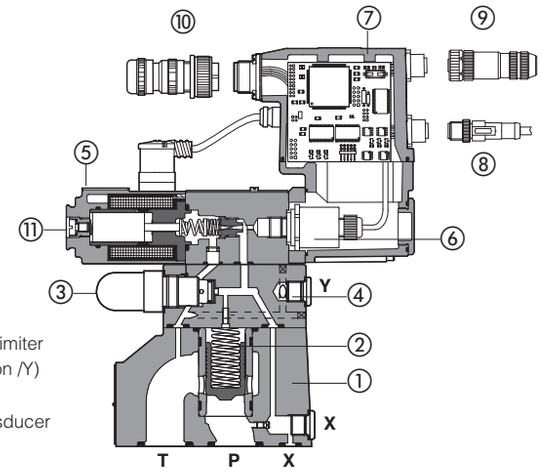

① Valve main body
② Main poppet
③ Mechanical pressure limiter
④ Drain port G 1/4" (option /Y)
⑤ Proportional solenoid
⑥ Integral pressure transducer
⑦ Integral electronics
⑧ USB connector
⑨ Fieldbus connector
⑩ Main connector
⑪ Screw for air bleeding

AGMZO-RES-P-BC-20

AGMZO-R, AGMZO-REB, AGMZO-RES

Poppet type pilot operated digital proportional relief valves with integral pressure transducer for pressure closed loop controls.

Executions:

- **R** without integral driver, to be coupled with separated driver type E-BM-RES, see table GS203
- **REB** with basic integral digital electronic driver, analog reference signals and USB port for software functional parameters setting
- **RES** with full integral digital electronic driver and fieldbus interface for functional parameters setting, reference signals and real-time diagnostics

The integral digital electronic driver performs the valve's hydraulic regulation according to the reference signal and assures valve-to-valve interchangeability thanks to the factory presetting

Size: **10, 20, 32**
Max flow: **200, 400, 600 l/min**
Max pressure: **350 bar**

1 MODEL CODE

AGMZO - R EB - P - NP - 10 / 315 / * / * ** / *

AGMZO: Proportional pressure relief valve, two stage

R = closed loop pressure control

- = omit for execution with separated driver see section 2
EB = basic integral driver
ES = full integral driver

P = with integral pressure transducer

Fieldbus interfaces - USB port always present **(1)**:
NP = Not present **BP** = PROFIBUS DP
BC = CANopen **EH** = EtherCAT

Valve size ISO 6264
10, 20, 32

Max regulated pressure:
100 = 100 bar **315** = 315 bar
210 = 210 bar **350** = 350 bar

Hydraulic options, see section 8:
E = external pilot
Y = external drain (only pipe connection G1/4")

Electronics options
only for **REB** and **RES** - see section 14 :
I = current reference input and monitor 4÷20 mA (omit for standard voltage reference input 0÷10 V)
Q = enable signal
Z = double power supply, enable, fault and monitor signals - 12 pin connector

Dynamic response preset
see section 12:
- = omit for PID 1 fast (default)
2 = PID 2 standard
3 = PID 3 smooth

Series number

Seals material, see sect. 5, 6:
- = NBR
PE = FKM
BT = HNBR

(1) Omit for **R** execution; **REB** available only in version **NP**; **RES** available only in version **BC**, **BP**, **EH**

2 ELECTRONIC DRIVERS

Valve model	R	REB	RES
Drivers model	E-BM-RES	E-RI-REB	E-RI-RES
Type	Digital		
Format	DIN rail panel format	Integral to valve	
Data sheet	GS203	GS205	

Note: for main and communication connectors see sections 16, 17

Hydraulic symbol

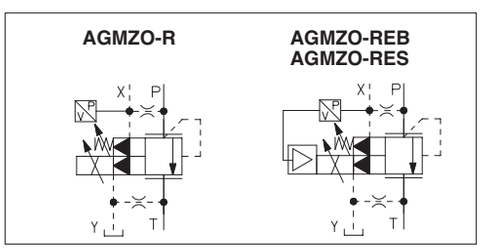

3 GENERAL NOTES

AGMZO-R* proportional valves are CE marked according to the applicable Directives (e.g. Immunity/Emission EMC Directive and Low Voltage Directive). Installation, wirings and start-up procedures must be performed according to the general prescriptions shown in table F003 and in the installation notes supplied with relevant components.

The electrical signals of the valve (e.g. monitor signals) must not be directly used to activate safety functions or components, as prescribed by the European standards (Safety requirements of fluid technology systems and components-hydraulics, EN-982).

4 FIELDBUS - only for RES

Fieldbus allows the direct communication of the proportional valve with machine control unit for digital reference signal, diagnostics and settings of functional parameters. Analog reference signal remain available on the main connector for quick commissioning and maintenance. For detailed information about fieldbus features and specification see tech table **GS510**.

5 MAIN CHARACTERISTICS - based on mineral oil ISO VG 46 at 50 °C

Assembly position	Any position			
Subplate surface finishing	Roughness index, Ra 0,4 flatness ratio 0,01/100 (ISO 1101)			
MTTFd valves according to EN ISO 13849	75 years, see technical table P007			
Ambient temperature range	**R**: **standard** = -20°C ÷ +70°C, **/BT** option = -40°C ÷ +60°C **REB, RES**: **standard** = -20°C ÷ +60°C, **/BT** option = -40°C ÷ +60°C			
Storage temperature range	**R**: **standard** = -20°C ÷ +80°C, **/BT** option = -40°C ÷ +70°C **REB, RES**: **standard** = -20°C ÷ +70°C, **/BT** option = -40°C ÷ +70°C			
Coil resistance R at 20°C	3 ÷ 3,3 Ω			
Max. solenoid current	2,6 A			
Max. power	**R** = 30 Watt **REB, RES** = 50 Watt			
Pressure transducer	E-ATR-8/*/I output signal = 4÷ 20 mA - see tech. table GS465			
Insulation class	H (180°) Due to the occuring surface temperatures of the solenoid coils, the European standards ISO 13732-1 and EN982 must be taken into account			
Protection degree to DIN EN60529	IP66/67 with mating connectors			
Tropicalization (only REB, RES)	Tropical coating on electronics PCB			
Duty factor	Continuous rating (ED=100%)			
EMC, climate and mechanical load	See technical table G004			
Communication interface (only REB, RES)	USB Atos ASCII coding	CANopen EN50325-4 + DS408	PROFIBUS DP EN50170-2/IEC61158	EtherCAT IEC 61158
Communication physical layer (only REB, RES)	not insulated USB 2.0 + USB OTG	optical insulated CAN ISO11898	optical insulated RS485	Fast Ethernet, insulated 100 Base TX

Valve size		**10**	**20**	**32**
Max regulated pressure	[bar]	100; 210; 315; 350		
Min. regulated pressure	[bar]	see min. pressure/flow diagrams at section 7		
Max. pressure at port P	[bar]	350		
Max. pressure at port T	[bar]	210		
Max. flow	[l/min]	200	400	600
Response time 0-100% step signal **(1)** (depending on installation)	[ms]	80	100	115
Hysteresis	[% of the max pressure]	≤ 0,5		
Linearity	[% of the max pressure]	≤ 1,0		
Repeatability	[% of the max pressure]	≤ 0,2		
Thermal drift		zero point displacement < 1% at ΔT = 40°C		

Notes: above performance data refer to valves coupled with Atos electronic drivers, see section 2.

(1) Average response time value; the pressure variation in consequence of a modification of the reference input signal to the valve is affected by the stiffness of the hydraulic circuit: greater is the stiffness of the circuit, faster is the dynamic response, see section 12

6 SEALS AND HYDRAULIC FLUID - for other fluids not included in below table, consult our technical office

Seals, recommended fluid temperature	NBR seals (standard) = -20°C ÷ +60°C, with HFC hydraulic fluids = -20°C ÷ +50°C FKM seals (/PE option) = -20°C ÷ +80°C HNBR seals (/BT option) = -40°C ÷ +60°C, with HFC hydraulic fluids = -40°C ÷ +50°C		
Recommended viscosity	20÷100 mm²/s - max allowed range 15 ÷ 380 mm²/s		
Fluid contamination class	ISO 4406 class 20/18/15 NAS 1638 class 9, achievable with in line filter - 10 μm (β10 ≥75 recommended)		
Hydraulic fluid	**Suitable seals type**	**Classification**	**Ref. Standard**
Mineral oils	NBR, FKM, HNBR	HL, HLP, HLPD, HVLP, HVLPD	DIN 51524
Flame resistant without water	FKM	HFDU, HFDR	ISO 12922
Flame resistant with water	NBR, HNBR	HFC	

7 DIAGRAMS (based on mineral oil ISO VG 46 at 50 °C)

1 = Regulation diagrams
with flow rate Q = 50 l/min

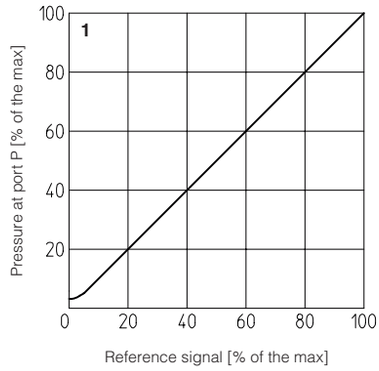

2 = Pressure/flow diagrams
with reference signal set at Q = 50 l/min

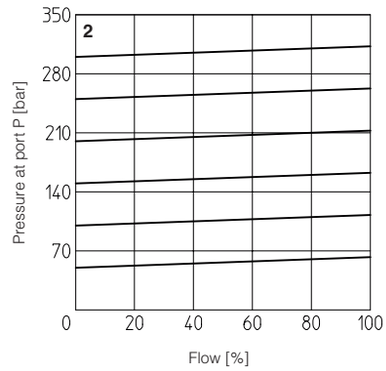

3-8 = Min. pressure/flow diagrams
with zero reference signal

3 = AGMZO-*-10/100, 210, 315
4 = AGMZO-*-10/350
5 = AGMZO-*-20/100, 210, 315
6 = AGMZO-*-20/350
7 = AGMZO-*-32/100, 210, 315
8 = AGMZO-*-32/350

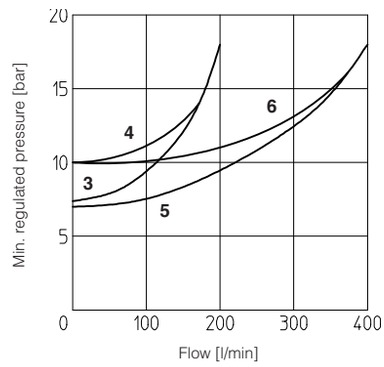

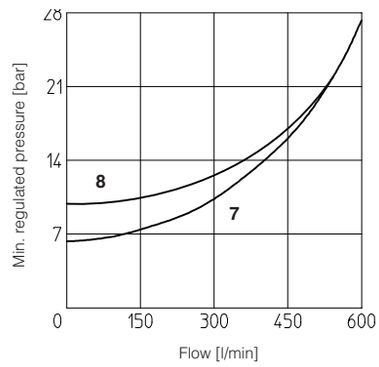

8 HYDRAULIC OPTIONS

8.1 Option E

External pilot option to be selected when the pilot pressure is supplied from a different line respect to the P main line.
With option E the internal connection between port P and X of the valve is plugged.
The pilot pressure must be connected to the X port available on the valve's mounting surface or on main body (threaded pipe connection G ¼").

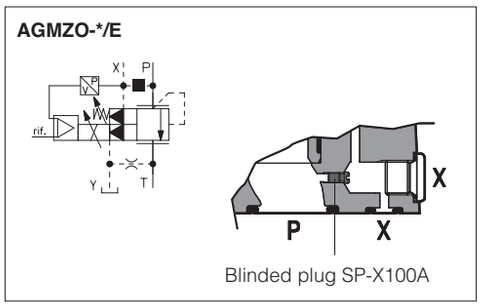

8.2 Option Y

The external drain is mandatory in case the main line T is subjected to pressure peaks or it is pressurized.
The Y drain port has a threaded connection G ¼" available on the pilot stage body.

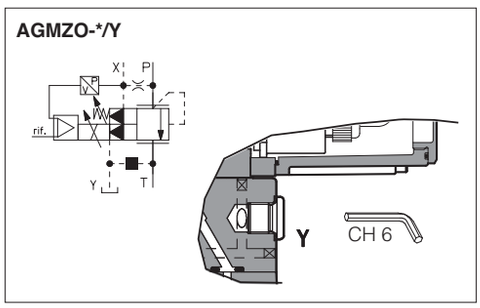

9 MECHANICAL PRESSURE LIMITER

The AGMZO are provided with mechanical pressure limiter acting as protection against overpressure. For safety reasons the factory setting of the mechanical pressure limiter is fully unloaded (min pressure).
At the first commissioning it must be set at a value lightly higher than the max pressure regulated with the proportional control.
For the pressure setting of the mechanical pressure limiter, proceed according to following steps:

- apply the max reference input signal to the valve's driver. The system pressure will not increase until the mechanical pressure limiter remains unloaded.
- turn clockwise the adjustment screw ① until the system pressure will increase up to a stable value corresponding to the pressure setpoint at max reference input signal.
- turn clockwise the adjustment screw ① of additional 1 or 2 turns to ensure that the mechanical pressure limiter remains closed during the proportional valve working.

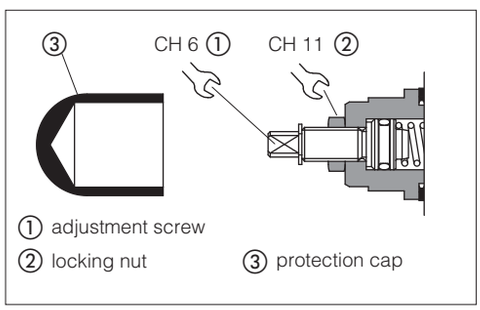

10 AIR BLEEDING

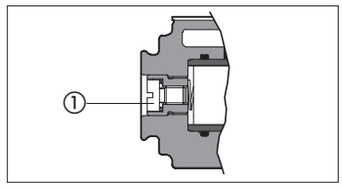

At the first valve commissioning the air eventually trapped inside the solenoid must be bled-off though the screw ① located at the rear side of the solenoid housing.
The presence of air may cause pressure instability and vibrations.

11 REMOTE PRESSURE UNLOADING

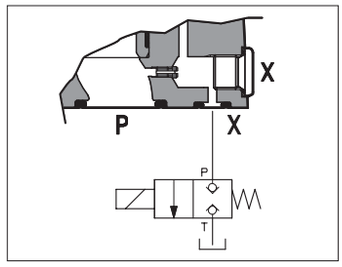

The **P** main line can be remotely unloaded by connecting the valve X port to a solenoid valve as shown in the below scheme (venting valve).
This function can be used in emergency to unload the system pressure by-passing the proportional control.

12 DYNAMIC RESPONSE - 4 pressure PIDs

The valve is provided with 4 PIDs configurations to match different hydraulic conditions. The required PID configuration can be selected before the valve commissioning, through Atos E-SW software via USB port. Only for **RES** the PID can be also selected in real time, through PLC via fieldbus.

PID	**Dynamic response** example diagrams at side
1	Fast - default (1)
2	Standard
3	Smooth
4	Open Loop

(1) interchangeable with previous TERS version

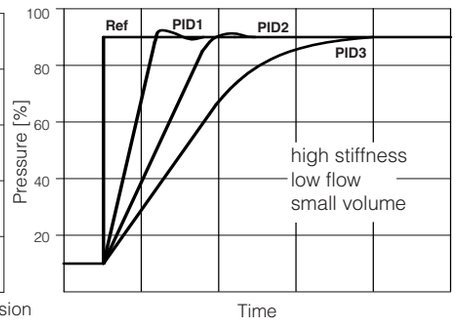

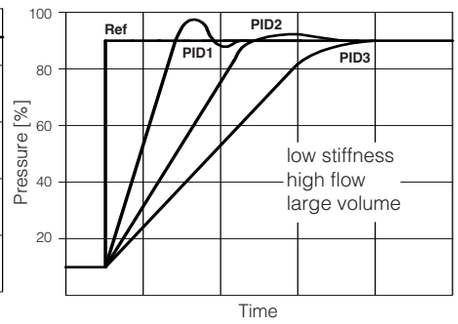

Above indications have to be considered as a general guideline, being affected by hydraulic circuit stiffness, working flow and dead volume. The valve's dynamics can be further optimized on the specific application, customizing PIDs parameters.

13 PRESSURE TRANSDUCER FAILURE

In case of pressure transducer failure, the valve's reaction can be configured through Atos E-SW software to:
- cut off the current to solenoid, therefore the regulated pressure will be reduced to minimum value (default setting)
- automatically switch the pressure control from closed loop (PID1, 2, 3) to open loop (PID4), to let the valve to temporarily operate with reduced regulation accuracy

14 ELECTRONIC OPTIONS

Standard driver execution provides on the 7 pin main connector:

Power supply - 24 VDC must be appropriately stabilized or rectified and filtered; a 2,5 A fuse time lag is required in series to each driver power supply. Apply at least a 10000 μF/40 V capacitance to single phase rectifiers or a 4700 μF/40 V capacitance to three phase rectifiers

Reference input signal - analog differential input with 0÷+10 VDC nominal range (pin D, E), proportional to desired valve pressure regulation

Monitor output signal - analog output signal proportional to the actual valve pressure regulation = 0÷+10 VDC nominal range

Note: a minimum booting time of 500 ms has be considered from the driver energizing with the 24 VDC power supply before the valve has been ready to operate. During this time the current to the valve coils is switched to zero.

14.1 Option /I

It provides 4 ÷ 20 mA current reference and monitor signals, instead of the standard 0÷+10 VDC.
Input signal can be reconfigured via software selecting between voltage and current, within a maximum range of ±10 V or ±20 mA.
It is normally used in case of long distance between the machine control unit and the valve or where the reference signal can be affected by electrical noise; the valve functioning is disabled in case of reference signal cable breakage.

14.2 Option /Q

To enable the driver, supply 24 VDC on pin C referred to pin B: Enable input signal allows to enable/disable the current supply to the solenoid, without removing the electrical power supply to the driver; it is used to maintain active the communication and the other driver functions when the valve has to be disabled. This condition does not comply with European Norms EN13849-1 (ex EN954-1).

14.3 Option /Z

It provides, on the 12 pin main connector, the following additional features:

Enable Input Signal

To enable the driver, supply 24 VDC on pin 3 referred to pin 2: Enable input signal allows to enable/disable the current supply to the solenoid, without removing the electrical power supply to the driver; it is used to maintain active the communication and the other driver functions when the valve has to be disabled. This condition does not comply with European Norms EN13849-1 (ex EN954-1).

Fault Output Signal

Fault output signal indicates fault conditions of the driver (solenoid short circuits/not connected, reference signal cable broken for 4÷20mA input, etc.). Fault presence corresponds to 0 VDC, normal working corresponds to 24 VDC (pin 11 referred to pin 2): Fault status is not affected by the Enable input signal.

Power supply for driver's logics and communication

Separate power supply (pin 9,10) allow to cut solenoid power supply (pin 1,2) while maintaining active diagnostics, USB and fieldbus communication.
A safety fuse is required in series to each driver power supply: 500 mA fast fuse.

14.4 Possible combined options: /IQ, /IZ

15 ELECTRONIC CONNECTIONS

15.1 Main connector signals - 7 pin - **standard** and **/Q** option - **AGMZO-REB** and **AGMZO-RES** (A1)

PIN	Standard	/Q	TECHNICAL SPECIFICATIONS	NOTES
A	**V+**		Power supply 24 VDC Rectified and filtered: VRMS = 20 ÷ 32 VMAX (ripple max 10 % VPP)	Input - power supply
B	**V0**		Power supply 0 VDC	Gnd - power supply
C	**AGND**		Analog ground	Gnd - analog signal
		ENABLE	Enable (24 VDC) or disable (0 VDC) the driver, referred to V0	Input - on/off signal
D	**P_INPUT+**		Pressure reference input signal: ±10 VDC / ±20 mA maximum range Defaults are 0 ÷ 10 VDC for standard and 4 ÷ 20 mA for /I option	Input - analog signal **Software selectable**
E	**INPUT-**		Negative reference input signal for P_INPUT+	Input - analog signal
F	**P_MONITOR** referred to: AGND | V0		Pressure monitor output signal: 0 ÷ 10 VDC / 0 ÷ 20 mA maximum range, referred to VL0 Defaults are 0 ÷ 10 VDC for standard and 4 ÷ 20 mA for /I option	Output - analog signal **Software selectable**
G	**EARTH**		Internally connected to driver housing	

15.2 Main connector signals - 12 pin - **/Z** option - **AGMZO-REB** and **AGMZO-RES** (A2)

PIN	/Z	TECHNICAL SPECIFICATIONS	NOTES
1	**V+**	Power supply 24 VDC Rectified and filtered: VRMS = 20 ÷ 32 VMAX (ripple max 10 % VPP)	Input - power supply
2	**V0**	Power supply 0 VDC	Gnd - power supply
3	**ENABLE**	Enable (24 VDC) or disable (0 VDC) the driver, referred to V0	Input - on/off signal
4	**P_INPUT+**	Pressure reference input signal: ±10 VDC / ±20 mA maximum range Defaults are 0 ÷ 10 VDC for standard and 4 ÷ 20 mA for /I option	Input - analog signal **Software selectable**
5	**INPUT-**	Negative reference input signal for P_INPUT+	Input - analog signal
6	**P_MONITOR**	Pressure monitor output signal: 0 ÷ 10 VDC / 0 ÷ 20 mA maximum range, referred to VL0 Defaults are 0 ÷ 10 VDC for standard and 4 ÷ 20 mA for /I option	Output - analog signal **Software selectable**
7	**NC**	Do not connect	
8	**NC**	Do not connect	
9	**VL+**	Power supply 24 VDC for driver's logic and communication	Input - power supply
10	**VL0**	Power supply 0 VDC for driver's logic and communication	Gnd - power supply
11	**FAULT**	Fault (0 VDC) or normal working (24 VDC), referred to V0	Output - on/off signal
PE	**EARTH**	Internally connected to driver housing	

15.3 Communication connectors - AGMZO-REB (B) and AGMZO-RES (B) (C)

(B) **USB connector - M12 - 5 pin** always present

PIN	SIGNAL	TECHNICAL SPECIFICATION (1)
1	**+5V_USB**	Power supply
2	**ID**	Identification
3	**GND_USB**	Signal zero data line
4	**D-**	Data line -
5	**D+**	Data line +

(C1) **BC fieldbus execution, connector - M12 - 5 pin** (2)

PIN	SIGNAL	TECHNICAL SPECIFICATION (1)
1	**CAN_SHLD**	Shield
2	**NC**	do not connect
3	**CAN_GND**	Signal zero data line
4	**CAN_H**	Bus line (high)
5	**CAN_L**	Bus line (low)

(C2) **BP fieldbus execution, connector - M12 - 5 pin** (2)

PIN	SIGNAL	TECHNICAL SPECIFICATION (1)
1	**+5V**	Termination supply signal
2	**LINE-A**	Bus line (high)
3	**DGND**	Data line and termination signal zero
4	**LINE-B**	Bus line (low)
5	**SHIELD**	

(C3) (C4) **EH fieldbus execution, connector - M12 - 4 pin** (2)

PIN	SIGNAL	TECHNICAL SPECIFICATION (1)
1	**TX+**	Transmitter
2	**RX+**	Receiver
3	**TX-**	Transmitter
4	**RX-**	Receiver
Housing	**SHIELD**	

Notes: (1) shield connection on connector's housing is recommended **(2)** only for **RES** execution

15.4 Solenoid connection - only for **AGMZO-R**

PIN	SIGNAL	TECHNICAL SPECIFICATION	Connector code 666
1		Power supply	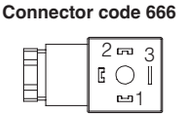
2		Power supply	
3		GNG	

15.5 Pressure transducer connection - only for **AGMZO-R**

PIN	SIGNAL	TECHNICAL SPECIFICATION	Connector code ZBE-08
1	**V+**	Power supply	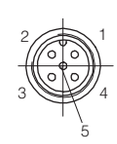
2	**NC**	Not connected	
3	**Vout**	output signal 4 ÷ 20 mA	
4	**NC**	Not connected	
5	**NC**	Not connected	

15.6 Connections layout - only for **REB** and **RES**

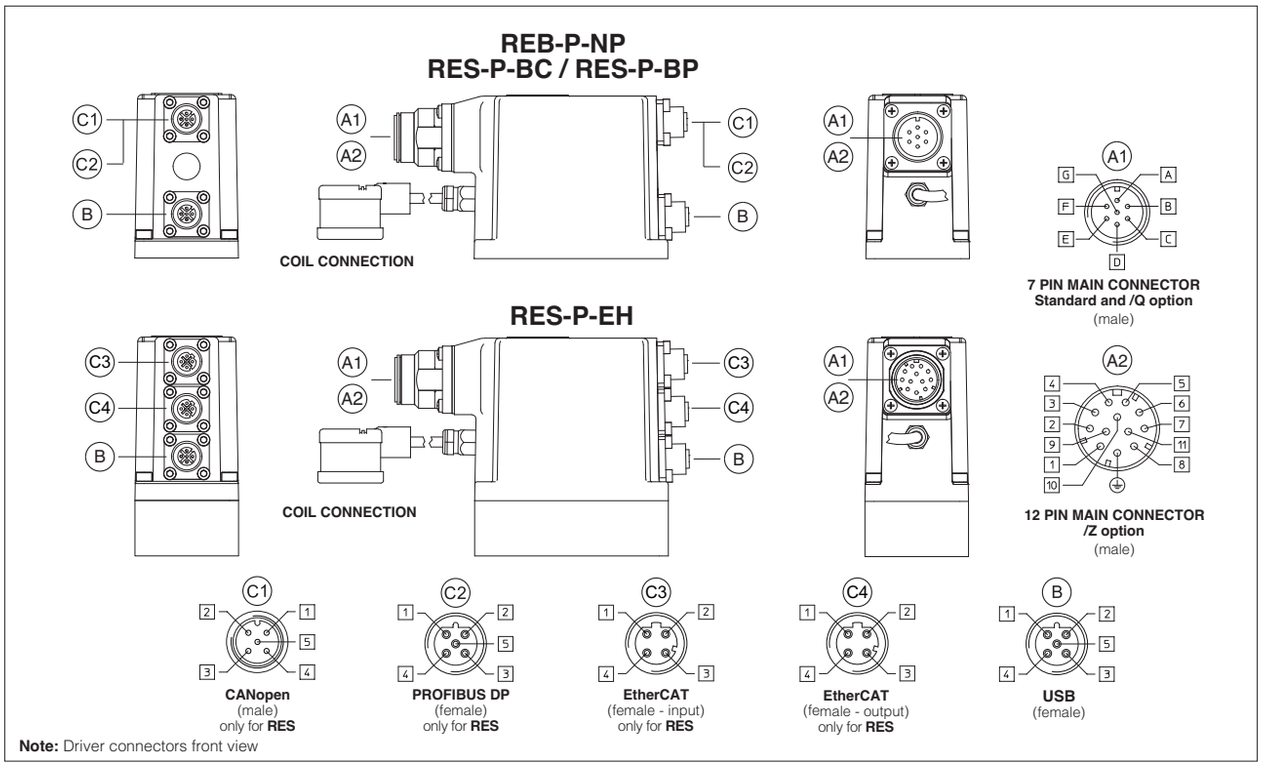

Note: Driver connectors front view

16 CONNECTORS

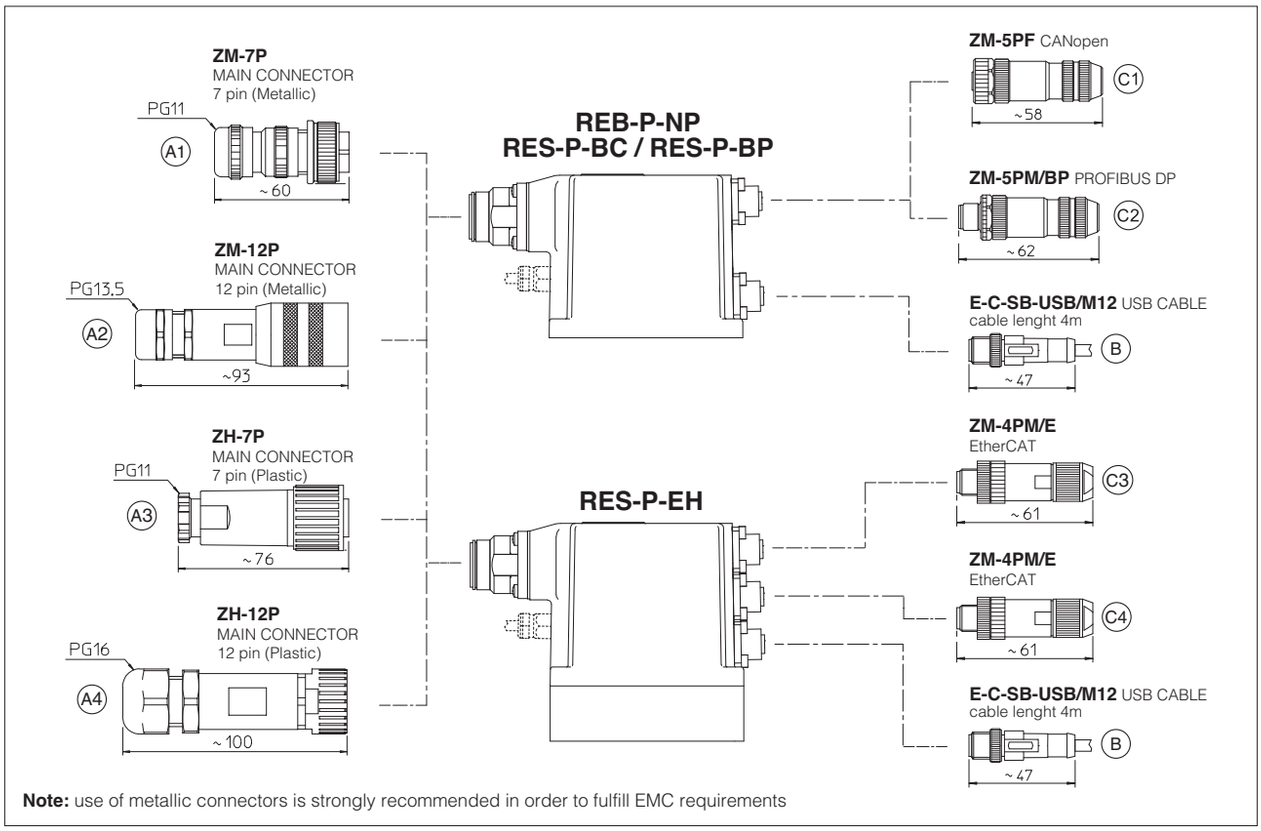

Note: use of metallic connectors is strongly recommended in order to fulfill EMC requirements

17 MODEL CODES OF MAIN CONNECTORS AND COMMUNICATION CONNECTORS - to be ordered separately

VALVE VERSION	R (1) Power supply	R (1) Pressure transducer	REB RES	REB/Z RES/Z	BC - CANopen	BP - PROFIBUS DP	EH - EtherCAT
CONNECTOR CODE	666	ZBE-08	ZM-7P (A1)	ZM-12P (A2)	ZM-5PF (C1)	ZM-5PM/BP (C2)	ZM-4PM/E (C3)
			ZH-7P (A3)	ZH-12P (A4)			ZM-4PM/E (C4)
PROTECTION DEGREE	IP65		IP67				
DATA SHEET	K500		GS205, K500				

(1) Connectors supplied with the valve

only for **RES**

18 PROGRAMMING TOOLS - see tech table **GS500**

Valve's functional parameters and configurations, can be easily set and optimized using Atos E-SW programming software connected via USB port to the digital driver. For fieldbus versions, the software permits valve's parameterization through USB port also if the driver is connected to the central machine unit via fieldbus.

The software is available in different versions according to the driver's options:

E-SW-BASIC	support:	NP (USB)	PS (Serial)	IR (Infrared)
E-SW-FIELDBUS	support:	BC (CANopen)	BP (PROFIBUS DP)	EH (EtherCAT)
		EW (POWERLINK)	EI (EtherNet/IP)	
E-SW-*/PQ	support:	valves with SP, SF, SL alternated control (e.g. E-SW-BASIC/PQ)		

WARNING: drivers USB port is not isolated!
The use of isolator adapter is highly recommended for PC protection (see table **GS500**)

USB connection

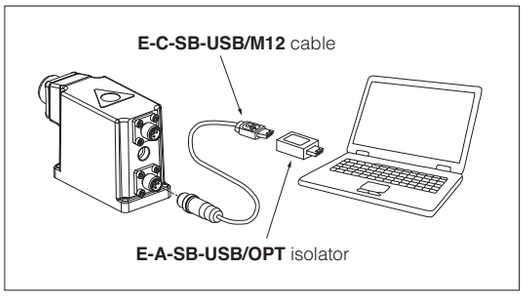

19 INSTALLATION DIMENSIONS of AGMZO [mm]

SIZE 10

ISO 6264: 2007
Mounting surface: 6264-06-09-1-97 (see table P005)
Fastening bolts: 4 socket head screws
M12x35 class 12.9
Tightening torque = 125 Nm
Seals: 2 OR 123, 1 OR 109/70
Ports P, T: Ø = 14 mm
Port X: Ø = 3,2 mm

Mass [kg]

	R	REB, RES	RES-EH
AGMZO-*-10	5,7	6,2	6,3

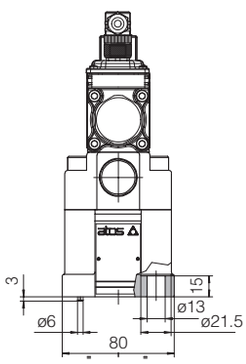

AGMZO-R-P-10

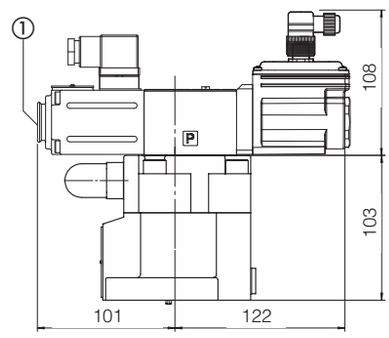

AGMZO-REB-P-NP-10
AGMZO-RES-P-BC-10
AGMZO-RES-P-BP-10

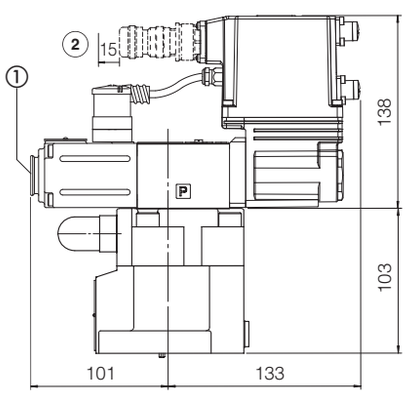

AGMZO-RES-P-EH-10

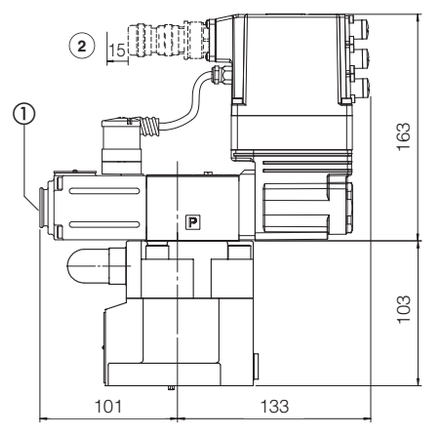

① = Screw for air bleeding: at the first valve commissioning the air eventually trapped inside the solenoid must be bled-off though the screw ①

② = Space to remove the 7 or 12 pin main connector. For main and communication connectors see section 16, 17

SIZE 20

ISO 6264: 2007
Mounting surface: 6264-08-13-1-97
(see table P005)
Fastening bolts: 4 socket head screws
M16x50 class 12.9
Tightening torque = 300 Nm
Seals: 2 OR 4112, 1 OR 109/70
Ports P, T: Ø = 24 mm
Port X: Ø = 3,2 mm

Mass [kg]

	R	REB, RES	RES-EH
AGMZO-*-20	6,9	7,4	7,5

AGMZO-R-P-20

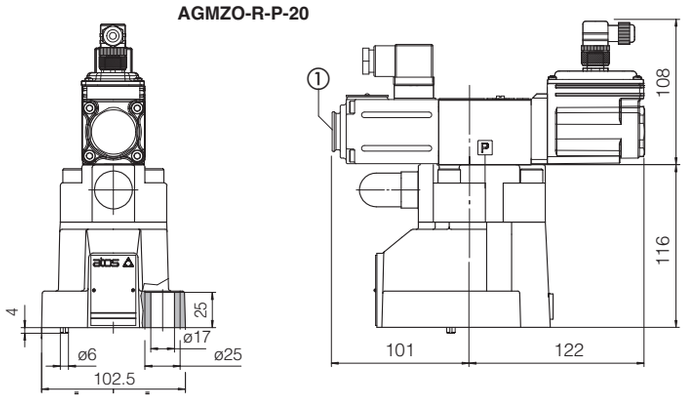

AGMZO-REB-P-NP-20
AGMZO-RES-P-BC-20
AGMZO-RES-P-BP-20

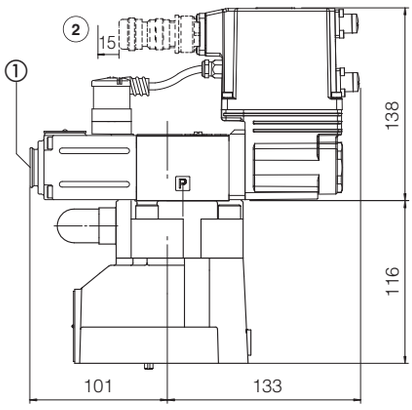

AGMZO-RES-P-EH-20

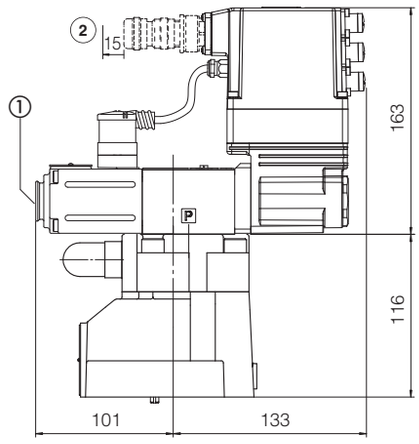

SIZE 32

ISO 6264: 2007
Mounting surface: 6264-10-17-1-97
(see table P005)
(with M20 fixing holes instead of standard M18)
Fastening bolts: 4 socket head screws
M20x60 class 12.9
Tightening torque = 600 Nm
Seals: 2 OR 4131, 1 OR 109/70
Ports P, T: Ø = 28 mm
Port X: Ø = 3,2 mm

Mass [kg]

	R	REB, RES	RES-EH
AGMZO-*-32	8,3	8,8	8,9

AGMZO-R-P-32

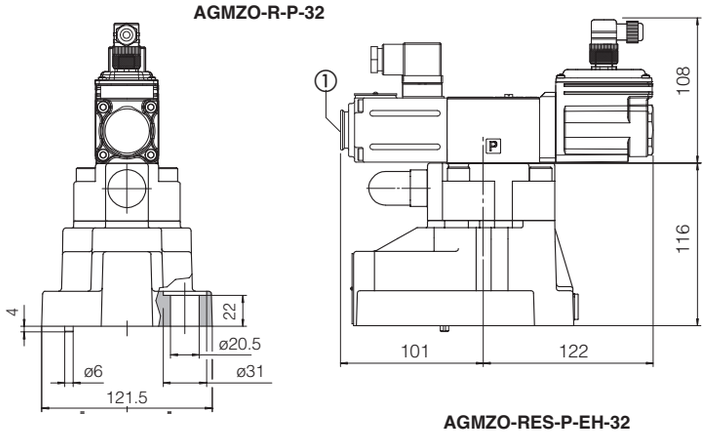

AGMZO-REB-P-NP-32
AGMZO-RES-P-BC-32
AGMZO-RES-P-BP-32

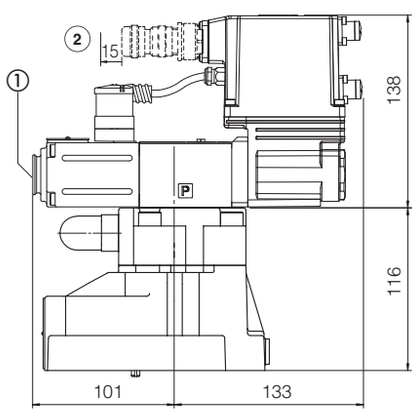

AGMZO-RES-P-EH-32

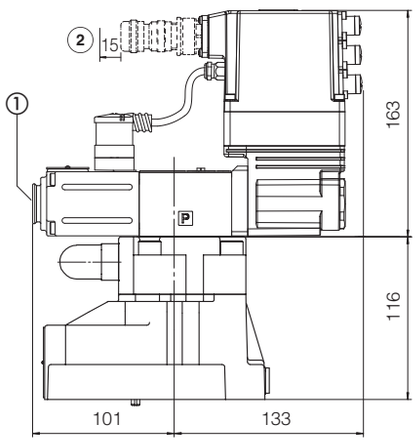

① = Screw for air bleeding: at the first valve commissioning the air eventually trapped inside the solenoid must be bled-off though the screw ①

② = Space to remove the 7 or 12 pin main connector. For main and communication connectors see section 16, 17