Char-Lynn®

Hydraulic Motors

No. 11-103
October 1997

EATON

General Purpose Motors
R Series

We Manufacture

Hydraulics

Solutions

R Series

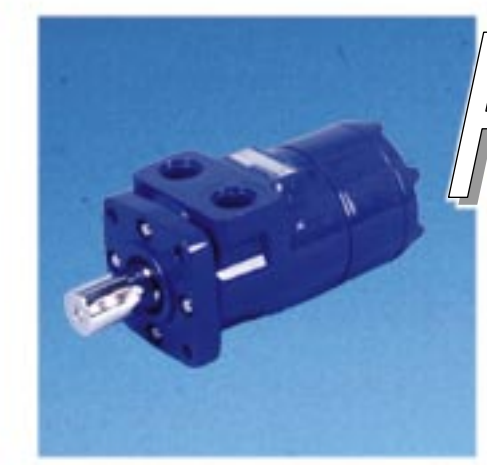

R Series

Geroler® Element .... 11 Displacements
Flow LPM [GPM] ..... 55 [15] Continuous**
75 [20] Intermittent*
Speed ..... Up to 1055 RPM
Pressure Bar [PSI] .... 125 [1800] Cont.
165 [2400] Inter.
Torque Nm [lb-in] ..... 455 [4040] Cont.
520 [4600] Inter.

This Char-Lynn R Series spool valve motor with the Geroler torque generating element is economical, efficient, compact, powerful, and is very effective at low flows and high pressure applications. The outer ring of the Geroler element has seven precision machined rollers that provide rolling contact as the six lobe star orbits within the Geroler element. This orbiting slow turning star coupled to the output shaft with a splined drive provides the hydromechanical six to one advantage. Consequently, with this 6 to 1 reduction built into each motor, gear box speed reducers will not be necessary on most applications.

** Continuous— (Cont.) Continuous rating, motor may be run continuously at these ratings.

* Intermittent— (Inter.) Intermittent operation, 10% of every minute.

R Series Displacement Size = cubic centimeter per shaft revolution (cm^3/r)
- 36 [2.2] = cubic inch per shaft revolution ([in^3/r])
- 49 [3.0]
- 66 [4.0]
- 80 [4.9]
- 102 [6.2]
- 131 [8.0]
- 157 [9.6]
- 195 [11.9]
- 244 [14.9]
- 306 [18.7]
- 370 [22.6]

Mounting Flange
- 2 Bolt (Standard) 82,6 [3.25] Pilot Dia. and 13,59 [.535] Dia. Mounting Holes 106,2 [4.18] Dia. B.C.
- 4 Bolt (Standard) 44,4 [1.75] Pilot Dia. and 3/8-16 Mounting Holes 82,6 [3.25] Dia. B.C.
- 4 Bolt (Standard) 44,4 [1.75] Pilot Dia. and M10 x 1,5 Mounting Holes 82,6 [3.25] Dia. B.C.
- 4 Bolt Magneto 82,6 [3.25] Pilot Dia. and 13,59 [.535] Dia. Mounting Holes 106,2 [4.18] Dia. B.C.

Output Shaft
- 1 inch Dia. Straight with Woodruff Key and 1/4-20 Threaded Hole
- 1 inch Dia. SAE 6B Splined with 1/4-20 Threaded Hole
- 1 inch Dia. Straight with 7,9 [.31] Dia. Crosshole 11,2 [.44] from End
- 1 inch Dia. Straight with 10,2 [.40] Dia. Crosshole 15,7 [.62] from End and 1/4-20 Threaded Hole
- 7/8 inch Dia. SAE B 13 T Splined
- 1 inch Dia. Tapered with Woodruff Key and Nut
- 25mm Dia. Straight with 8mm Key and 8mm x 1,2 Threaded Hole
- 1 inch Dia. Straight with 10,2 [.40] Dia. Crosshole 15,7 [.62] from End and 1/4-20 Threaded Hole (Plated for Corrosion Protection)
- 1 inch Dia. Tapered with Woodruff Key and Nut, 9,52 [.375] Reduced Length

Port Type
- 7/8-14 O-ring
- 1/2-14 NPTF
- Manifold (5/16-18 Mounting Threads)
- Manifold (M8 x 1,5 Mounting Threads)
- G 1/2 (BSP)

Case Drain
- No Case Drain
- 7/16-20 O-ring Port End Cap
- G 1/4 (BSP) Port End Cap

Special Features Available
- Viton® Shaft Seal
- Reverse Rotation
- Flange Rotated 90°
- Corrosion Protected
- Low Speed Valve
- Speed Sensor

Viton® is a Registered Trade Name of Dupont Corp.

R Series

Shaft Seal

This high pressure shaft seal has a patented feature which allows the seal lip to follow shaft deflection, and therefore provides better sealing under high side load conditions. Deflection occurs as radial loads are applied to the output shaft. This time proven shaft seal design and construction is the same as that used in the popular Char-Lynn disc valve motors and is available in either buna or Viton®. With this shaft seal the motors can withstand high back pressures without an external case drain. The motors can be connected together in series, or parallel to one another.

Low Speed Valving

These motors with the low speed valving option provide very low speed while maintaining high torque. Designed to run continuously at up to 200 RPM at standard rated pressures and reduced flows, providing smooth operation at low speeds. Furthermore, they resist slippage and have more momentary load holding ability than the standard R Series motors. Motors with this valving are not intended for low pressure applications (41 Bar [600 PSI] Minimum). Shaft side / radial load ratings are not affected by this valving.

Free Running Motors

R Series motors can be ordered with a special Geroler to permit free running of the output shaft. With this special feature, performance might be affected when extreme conditions exist. Overall efficiency may be reduced slightly.

Corrosion Protected

R Series motors are available with a corrossion resistant coating for use in an hostile environment. This coating protects the motor from salt water and various chemicals. It is especially effective in marine, food processing, car wash, fishing, and agricultural applications. Shaft plating helps eliminate seal damage caused by these caustic or acid materials on this otherwise unprotected shaft sealing area. Corrosion protected motors are available with just the output shaft plated, or protected with an entire motor exterior coating.

Speed Sensor

The R Series motor is available with a rugged digital sensor for monitoring motor shaft speed. Compatible with vehicle electrical systems, this feature is ideal for applications where speeds need to be accurately known.

Catalog Contents

	page
Specifications	5
Performance Data	6- 8
Dimensions — Product (Mtg., Shafts, and Ports Listed Below)	9
Product Numbers (Standard Units)	10
Shaft Side Load Capacity	11
Dimensions — Shafts	12-13
Dimensions — Ports	14
Case Pressure and Case Drain	15-16
Speed Sensor	16
Dimensions — Mtg. Options/Mtg. Kit	17
Fluid Recommendations	18
Model Code (Special* — Orders)	19

* Contact your Eaton Representative

Specifications R Series

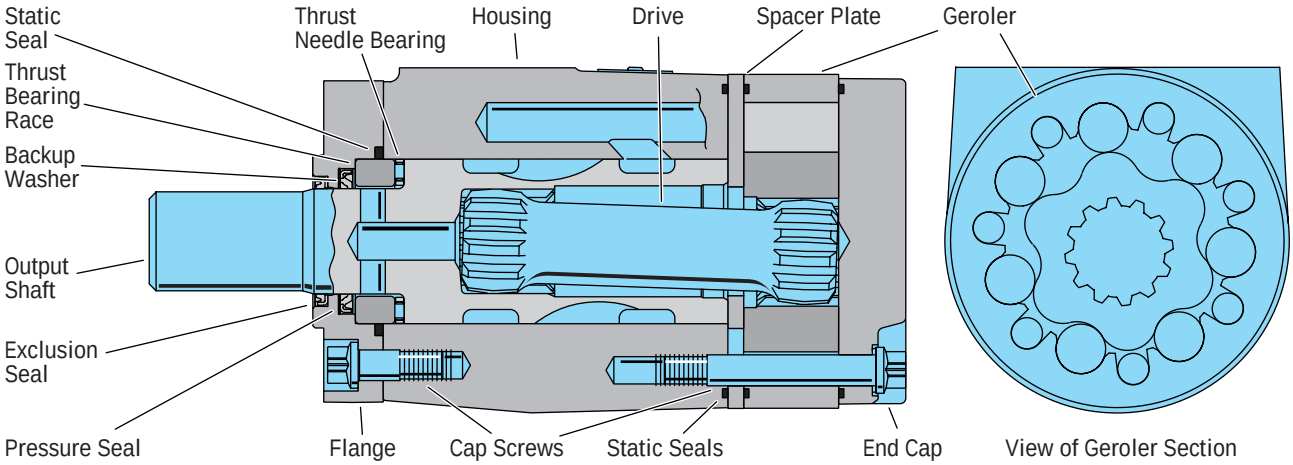

Specification Data —R Series

Displ. cm^3/r [in^3/r]		36 [2.2]	49 [3.0]	66 [4.0]	80 [4.9]	102 [6.2]	131 [8.0]	157 [9.6]	195 [11.9]	244 [14.9]	306 [18.7]	370 [22.6]
Max. Speed (RPM) @ Continuous Flow		987	868	805	657	519	401	338	270	215	172	142
Flow LPM [GPM]	Continuous	38 [10]	45 [12]	57 [15]	57 [15]	57 [15]	57 [15]	57 [15]	57 [15]	57 [15]	57 [15]	57 [15]
	Intermittent	38 [10]	53 [14]	64 [17]	68 [18]	68 [18]	76 [20]	76 [20]	76 [20]	76 [20]	76 [20]	76 [20]
Torque Nm [lb-in]	Continuous	58 [517]	81 [721]	110 [971]	135 [1197]	171 [1511]	222 [1968]	269 [2378]	320 [2830]	374 [3310]	423 [3741]	442 [3910]
	Intermittent **	78 [687]	108 [952]	144 [1278]	178 [1577]	226 [1998]	301 [2660]	339 [2996]	378 [3344]	422 [3735]	497 [4398]	520 [4600]
Pressure Δ Bar [Δ PSI]	Continuous*	124 [1800]	124 [1800]	124 [1800]	124 [1800]	124 [1800]	124 [1800]	124 [1800]	121 [1750]	114 [1650]	103 [1500]	90 [1300]
	Intermittent* **	165 [2400]	165 [2400]	165 [2400]	165 [2400]	165 [2400]	165 [2400]	159 [2300]	145 [2100]	131 [1900]	124 [1800]	114 [1650]

Maximum Case Pressure w/o Case Drain — 103 Bar [1500 PSI] see page 16

* Maximum intermittent pressure at motor inlet port of 172 Bar [2500 PSI] without regard to Δ Bar [Δ PSI] and/or back pressure ratings or combination thereof.

** A simultaneous maximum torque and maximum speed NOT recommended.

6B Splined or Tapered shafts are recommended whenever operating above 282 Nm [2500 lb-in] of torque, especially for those applications subject to frequent reversals (see page 12).

Δ Bar [Δ PSI]— True pressure difference between inlet port and outlet port.

Continuous Rating — Motor may be run continuously at these ratings.

Intermittent Operation — 10% of every minute.

Recommended Fluids — Premium quality, anti-wear type hydraulic oil with a viscosity of not less than 70 SUS at operating temperature (see page 18).

Recommended Maximum System Operating Temp. — Is 82° C [180° F]

Recommended Filtration — per ISO Cleanliness Code, level 18/13

To assure best motor life, run motor for approximately one hour at 30% of rated pressure before application to full load. Be sure motor is filled with fluid prior to any load applications.

Performance Data R Series

Motors run with high efficiency in all areas designated with a number for torque and speed, however for best motor life select a motor to run with a torque and speed range shown in the light blue area.

36 cm³/r [2.2 in³/r]

Δ Pressure Bar [PSI]

Flow LPM [GPM]	[200] 14	[400] 28	[600] 41	[800] 55	[1000] 69	[1200] 83	[1400] 97	[1600] 110	[1800] 124	Max. Continuous [2400] 165	Max. Intermittent
[2] 7,6	[46] 5 **205**	[107] 12 **198**	[170] 19 **191**	[233] 26 **183**	[295] 33 **175**	[352] 40 **166**	[408] 46 **155**	[462] 52 **140**	[512] 58 **124**		
[4] 15,1	[42] 5 **413**	[106] 12 **406**	[169] 19 **399**	[234] 26 **389**	[297] 34 **377**	[360] 41 **364**	[423] 48 **350**	[485] 55 **336**	[544] 61 **321**	[718] 81 **261**	
[6] 22,7	[36] 4 **626**	[99] 11 **618**	[164] 19 **610**	[228] 26 **600**	[292] 33 **588**	[356] 40 **575**	[421] 48 **562**	[484] 55 **547**	[547] 62 **533**	[726] 82 **468**	
[8] 30,3	[28] 3 **832**	[92] 10 **824**	[157] 18 **815**	[221] 25 **805**	[285] 32 **794**	[344] 39 **781**	[409] 46 **768**	[473] 53 **751**	[537] 61 **737**	[718] 81 **673**	
Max. Continuous [10] 37,9	[18] 2 **1038**	[82] 9 **1032**	[147] 17 **1021**	[211] 24 **1012**	[275] 31 **1000**	[336] 38 **988**	[400] 45 **973**	[464] 52 **955**	[529] 60 **939**	[715] 81 **877**	

[82] 9 **1032** } Torque [lb-in] Nm / Speed RPM

49 cm³/r [3.0 in³/r]

Δ Pressure Bar [PSI]

Flow LPM [GPM]	[200] 14	[400] 28	[600] 41	[800] 55	[1000] 69	[1200] 83	[1400] 97	[1600] 110	[1800] 124	Max. Continuous [2400] 165	Max. Intermittent
[2] 7,6	[68] 8 **148**	[156] 18 **142**	[242] 27 **137**	[327] 37 **130**	[412] 47 **125**	[493] 56 **118**	[571] 65 **109**	[644] 73 **98**	[711] 80 **82**		
[4] 15,1	[66] 7 **302**	[154] 17 **297**	[242] 27 **291**	[330] 37 **284**	[418] 47 **275**	[505] 57 **265**	[592] 67 **256**	[677] 76 **244**	[761] 86 **231**	[1000] 113 **178**	
[6] 22,7	[59] 7 **458**	[147] 17 **452**	[236] 27 **445**	[324] 37 **438**	[412] 47 **429**	[500] 56 **420**	[588] 66 **408**	[675] 76 **395**	[762] 86 **382**	[1018] 115 **330**	
[8] 30,3	[52] 6 **608**	[140] 16 **603**	[229] 26 **597**	[317] 36 **590**	[405] 46 **580**	[494] 56 **568**	[581] 66 **557**	[670] 76 **544**	[756] 85 **531**	[1018] 115 **478**	
[10] 37,9	[40] 5 **759**	[129] 15 **754**	[218] 25 **746**	[307] 35 **739**	[396] 45 **730**	[484] 55 **719**	[571] 65 **707**	[660] 75 **694**	[749] 85 **679**	[1011] 114 **624**	
Max. Continuous [12] 45,4	[28] 3 **911**	[117] 13 **904**	[206] 23 **896**	[293] 33 **888**	[383] 43 **878**	[471] 53 **867**	[560] 63 **855**	[648] 73 **843**	[736] 83 **829**	[998] 113 **770**	
Max. Intermittent [14] 53,0	[15] 2 **1062**	[103] 12 **1052**	[189] 21 **1045**	[280] 32 **1036**	[369] 42 **1026**	[457] 52 **1014**	[546] 62 **1002**	[635] 72 **988**	[724] 82 **970**		

66 cm³/r [4.0 in³/r]

Δ Pressure Bar [PSI]

Flow LPM [GPM]	[200] 14	[400] 28	[600] 41	[800] 55	[1000] 69	[1200] 83	[1400] 97	[1600] 110	[1800] 124	Max. Continuous [2400] 165	Max. Intermittent
[2] 7,6	[102] 12 **111**	[218] 25 **107**	[334] 38 **103**	[452] 51 **100**	[566] 64 **94**	[680] 77 **89**	[790] 89 **81**	[896] 101 **72**	[993] 112 **61**		
[4] 15,1	[95] 11 **226**	[213] 24 **223**	[331] 37 **219**	[448] 51 **212**	[565] 64 **206**	[683] 77 **200**	[799] 90 **192**	[914] 103 **184**	[1028] 116 **173**	[1357] 153 **136**	
[6] 22,7	[89] 10 **344**	[206] 23 **340**	[324] 37 **334**	[442] 50 **328**	[561] 63 **322**	[678] 77 **315**	[795] 90 **308**	[908] 103 **300**	[1024] 116 **290**	[1368] 155 **254**	
[8] 30,3	[75] 8 **458**	[192] 22 **454**	[311] 35 **449**	[429] 48 **443**	[550] 62 **436**	[668] 75 **431**	[786] 89 **423**	[903] 102 **414**	[1021] 115 **404**	[1369] 155 **363**	
[10] 37,9	[62] 7 **572**	[180] 20 **568**	[298] 34 **563**	[416] 47 **557**	[535] 60 **550**	[651] 74 **542**	[769] 87 **535**	[888] 100 **525**	[1006] 114 **514**	[1354] 153 **474**	
[12] 45,4	[45] 5 **687**	[164] 19 **681**	[282] 32 **675**	[400] 45 **670**	[518] 59 **664**	[636] 72 **655**	[755] 85 **648**	[874] 99 **637**	[990] 112 **627**	[1342] 152 **584**	
[14] 53,0	[29] 3 **800**	[146] 16 **795**	[265] 30 **790**	[384] 43 **783**	[503] 57 **776**	[621] 70 **767**	[738] 83 **760**	[857] 97 **749**	[976] 110 **737**	[1329] 150 **694**	
Max. Continuous [15] 56,8	[28] 3 **857**	[131] 15 **853**	[252] 28 **848**	[370] 42 **842**	[489] 55 **835**	[607] 69 **828**	[724] 82 **821**	[843] 95 **810**	[963] 109 **797**	[1319] 149 **748**	
Max. Intermittent [17] 64,4		[116] 13 **965**	[235] 27 **959**	[353] 40 **952**	[470] 53 **945**	[589] 67 **936**	[707] 80 **926**	[825] 93 **915**	[944] 107 **901**		

80 cm³/r [4.9 in³/r]

Δ Pressure Bar [PSI]

Flow LPM [GPM]	[200] 14	[400] 28	[600] 41	[800] 55	[1000] 69	[1200] 83	[1400] 97	[1600] 110	[1800] 124	Max. Continuous [2400] 165	Max. Intermittent
[2] 7,6	[115] 13 **91**	[258] 29 **89**	[400] 45 **86**	[539] 61 **82**	[675] 76 **78**	[809] 91 **74**	[940] 106 **68**	[1069] 121 **62**	[1191] 135 **53**		
[4] 15,1	[114] 13 **185**	[259] 29 **182**	[404] 46 **178**	[548] 62 **174**	[690] 78 **169**	[828] 94 **164**	[967] 109 **158**	[1103] 125 **150**	[1238] 140 **142**	[1633] 184 **108**	
[6] 22,7	[106] 12 **281**	[251] 28 **277**	[395] 45 **273**	[539] 61 **268**	[683] 77 **263**	[825] 93 **258**	[966] 109 **251**	[1104] 125 **243**	[1242] 140 **235**	[1651] 187 **201**	
[8] 30,3	[93] 11 **374**	[237] 27 **370**	[380] 43 **366**	[526] 59 **361**	[671] 76 **356**	[814] 92 **350**	[955] 108 **343**	[1095] 124 **334**	[1235] 140 **325**	[1649] 186 **291**	
[10] 37,9	[77] 9 **468**	[221] 25 **464**	[365] 41 **459**	[510] 58 **454**	[654] 74 **448**	[796] 90 **441**	[937] 106 **434**	[1081] 122 **425**	[1220] 138 **416**	[1636] 185 **379**	
[12] 45,4	[56] 6 **561**	[201] 23 **557**	[345] 39 **552**	[490] 55 **546**	[635] 72 **539**	[779] 88 **532**	[923] 104 **525**	[1064] 120 **517**	[1207] 136 **506**	[1627] 184 **468**	
[14] 53,0	[39] 4 **655**	[181] 20 **650**	[326] 37 **644**	[470] 53 **639**	[617] 70 **632**	[758] 86 **624**	[902] 102 **617**	[1046] 118 **606**	[1189] 134 **596**	[1610] 182 **555**	
Max. Continuous [15] 56,8		[170] 19 **696**	[315] 36 **692**	[462] 52 **686**	[606] 68 **680**	[751] 85 **672**	[895] 101 **662**	[1040] 117 **653**	[1181] 133 **642**	[1604] 181 **596**	
Max. Intermittent [18] 68,1		[127] 14 **834**	[272] 31 **829**	[415] 47 **824**	[559] 63 **816**	[703] 79 **808**	[847] 96 **799**	[992] 112 **788**	[1136] 128 **776**		

Performance data is typical at 120 SUS. Actual data may vary slightly from unit to unit in production

Performance Data R Series

Motors run with high efficiency in all areas designated with a number for torque and speed, however for best motor life select a motor to run with a torque and speed range shown in the light blue area.

102 cm³/r [6.2 in³/r]

Δ Pressure Bar [PSI] Continuous

Flow LPM [GPM]	[200] 14	[400] 28	[600] 41	[800] 55	[1000] 69	[1200] 83	[1400] 97	[1600] 110	[1800] 124	Max. Continuous [2400] 165
[2] **7,6**	[151] 17 **72**	[328] 37 **70**	[508] 57 **67**	[688] 78 **64**	[865] 98 **61**	[1038] 117 **56**	[1202] 136 **50**	[1361] 154 **44**	[1508] 170 **36**	
[4] **15,1**	[157] 18 **146**	[339] 38 **144**	[520] 59 **141**	[703] 79 **137**	[882] 100 **133**	[1063] 120 **128**	[1241] 140 **122**	[1416] 160 **114**	[1587] 179 **106**	[2065] 233 **77**
[6] **22,7**	[143] 16 **221**	[326] 37 **219**	[508] 57 **212**	[691] 78 **207**	[873] 99 **202**	[1054] 119 **197**	[1234] 139 **190**	[1412] 160 **183**	[1587] 179 **173**	[2083] 235 **142**
[8] **30,3**	[121] 14 **295**	[303] 34 **293**	[485] 55 **290**	[668] 75 **285**	[850] 96 **280**	[1032] 117 **275**	[1211] 137 **268**	[1391] 157 **261**	[1569] 177 **252**	[2083] 235 **217**
[10] **37,9**	[107] 12 **370**	[291] 33 **367**	[473] 53 **363**	[654] 73 **359**	[838] 95 **354**	[1019] 115 **348**	[1201] 136 **342**	[1380] 156 **334**	[1559] 176 **325**	[2074] 234 **288**
[12] **45,4**	[81] 9 **444**	[264] 30 **441**	[448] 51 **437**	[632] 71 **432**	[815] 92 **427**	[996] 113 **421**	[1177] 133 **415**	[1359] 154 **406**	[1527] 173 **396**	[2066] 233 **358**
[14] **53,0**	[55] 6 **518**	[239] 27 **515**	[420] 47 **511**	[603] 68 **506**	[784] 89 **500**	[968] 109 **494**	[1150] 130 **487**	[1332] 150 **479**	[1513] 171 **469**	[2043] 231 **42**
Max. Continuous [15] **56,8**	[37] 4 **555**	[222] 25 **551**	[405] 46 **547**	[587] 66 **543**	[769] 87 **538**	[952] 108 **532**	[1135] 128 **524**	[1314] 149 **514**	[1501] 170 **504**	[2032] 230 **464**
Max. Intermittent [18] **68,1**		[169] 19 **662**	[353] 40 **657**	[534] 60 **653**	[720] 81 **647**	[902] 102 **640**	[1085] 123 **633**	[1267] 143 **623**	[1447] 163 **612**	

131 cm³/r [8.0 in³/r]

Δ Pressure Bar [PSI] Continuous

Flow LPM [GPM]	[200] 14	[400] 28	[600] 41	[800] 55	[1000] 69	[1200] 83	[1400] 97	[1600] 110	[1800] 124	Max. Continuous [2400] 165
[2] **7,6**	[119] 13 **55**	[363] 41 **54**	[612] 69 **52**	[848] 96 **50**	[1077] 122 **47**	[1298] 147 **44**	[1505] 170 **39**	[1694] 191 **33**	[1934] 219 **29**	
[4] **15,1**	[185] 21 **113**	[421] 48 **111**	[660] 75 **109**	[896] 101 **106**	[1126] 127 **103**	[1356] 153 **100**	[1581] 179 **95**	[1798] 203 **90**	[2005] 227 **84**	[2585] 292 **56**
[6] **22,7**	[179] 20 **172**	[417] 47 **169**	[656] 74 **166**	[892] 101 **164**	[1123] 127 **161**	[1353] 153 **157**	[1583] 179 **152**	[1803] 204 **147**	[2015] 228 **141**	[2639] 298 **109**
[8] **30,3**	[165] 19 **229**	[403] 46 **227**	[639] 72 **224**	[875] 99 **221**	[1109] 125 **218**	[1341] 152 **214**	[1569] 177 **209**	[1791] 202 **204**	[2003] 226 **198**	[2634] 298 **163**
[10] **37,9**	[142] 16 **287**	[378] 43 **284**	[618] 70 **281**	[855] 97 **278**	[1091] 123 **275**	[1323] 149 **271**	[1554] 176 **266**	[1778] 201 **261**	[1992] 225 **255**	[2608] 295 **219**
[12] **45,4**	[114] 13 **344**	[352] 40 **341**	[589] 67 **338**	[826] 93 **335**	[1062] 120 **332**	[1297] 147 **328**	[1526] 172 **323**	[1747] 197 **319**	[1948] 220 **313**	[2579] 291 **274**
[14] **53,0**	[102] 12 **401**	[320] 36 **398**	[556] 63 **395**	[791] 89 **393**	[1028] 116 **383**	[1261] 142 **385**	[1493] 169 **380**	[1715] 194 **375**	[1922] 217 **370**	[2566] 290 **328**
Max. Continuous [15] **56,8**	[98] 11 **430**	[301] 34 **427**	[539] 61 **424**	[775] 88 **421**	[1013] 114 **417**	[1245] 141 **413**	[1476] 167 **408**	[1694] 191 **403**	[1906] 215 **398**	[2553] 288 **356**
Max. Intermittent [20] **75,7**		[226] 26 **570**	[423] 48 **566**	[659] 74 **562**	[894] 101 **558**	[1129] 128 **554**	[1360] 154 **549**	[1572] 178 **543**	[1784] 202 **533**	

157 cm³/r [9.6 in³/r]

Δ Pressure Bar [PSI] Continuous

Flow LPM [GPM]	[200] 14	[400] 28	[600] 41	[800] 55	[1000] 69	[1200] 83	[1400] 97	[1600] 110	[1800] 124	Max. Continuous [2300] 159
[2] **7,6**	[229] 26 **46**	[507] 57 **45**	[786] 89 **43**	[1052] 119 **41**	[1315] 149 **39**	[1566] 177 **36**	[1813] 205 **32**	[2038] 230 **27**	[2229] 252 **20**	
[4] **15,1**	[245] 28 **94**	[532] 60 **92**	[818] 92 **90**	[1099] 124 **87**	[1373] 155 **85**	[1638] 185 **81**	[1898] 214 **77**	[2149] 243 **72**	[2385] 269 **66**	[2967] 335 **47**
[6] **22,7**	[231] 26 **143**	[516] 58 **140**	[802] 91 **137**	[1085] 123 **134**	[1366] 154 **132**	[1640] 185 **128**	[1904] 215 **124**	[2159] 244 **119**	[2396] 271 **113**	[3015] 341 **88**
[8] **30,3**	[208] 23 **190**	[495] 56 **188**	[784] 89 **185**	[1068] 121 **182**	[1351] 153 **178**	[1631] 184 **175**	[1900] 215 **171**	[2154] 243 **166**	[2383] 269 **158**	[3012] 340 **136**
[10] **37,9**	[178] 20 **238**	[467] 53 **235**	[755] 85 **232**	[1038] 117 **229**	[1322] 149 **225**	[1603] 181 **222**	[1879] 212 **218**	[2133] 241 **213**	[2368] 268 **205**	[2989] 338 **176**
[12] **45,4**	[143] 16 **286**	[431] 49 **283**	[719] 81 **280**	[1005] 114 **277**	[1290] 146 **273**	[1569] 177 **268**	[1845] 208 **264**	[2104] 238 **259**	[2332] 263 **252**	[2965] 335 **224**
[14] **53,0**	[101] 11 **333**	[392] 44 **330**	[680] 77 **327**	[966] 109 **323**	[1252] 141 **319**	[1530] 171 **314**	[1803] 204 **311**	[2061] 233 **306**	[2298] 260 **298**	[2935] 332 **267**
Max. Continuous [15] **56,8**	[88] 10 **357**	[368] 42 **354**	[659] 74 **351**	[946] 107 **347**	[1230] 139 **344**	[1510] 171 **340**	[1789] 202 **335**	[2034] 230 **330**	[2274] 257 **322**	[2919] 330 **289**
Max. Intermittent [20] **75,7**		[229] 26 **472**	[516] 58 **468**	[796] 90 **465**	[1084] 122 **460**	[1368] 155 **455**	[1645] 186 **450**	[1912] 216 **444**	[2144] 242 **435**	

195 cm³/r [11.9 in³/r]

Δ Pressure Bar [PSI] Continuous

Flow LPM [GPM]	[200] 14	[400] 28	[600] 41	[800] 55	[1000] 69	[1200] 83	[1400] 97	[1600] 110	[1750] 121	Max. Continuous [2100] 145
[2] **7,6**	[207] 23 **37**	[566] 64 **36**	[921] 104 **34**	[1256] 142 **33**	[1577] 178 **31**	[1889] 213 **28**	[2179] 246 **24**	[2407] 272 **17**	[2561] 289 **11**	
[4] **15,1**	[359] 29 **76**	[618] 70 **74**	[967] 109 **72**	[1315] 149 **70**	[1654] 187 **68**	[1977] 223 **64**	[2289] 259 **61**	[2583] 292 **55**	[2794] 316 **51**	[3262] 369 **35**
[6] **22,7**	[274] 31 **115**	[628] 71 **113**	[977] 110 **111**	[1322] 149 **109**	[1665] 188 **106**	[1995] 225 **103**	[2308] 261 **100**	[2597] 293 **95**	[2816] 318 **89**	[3340] 377 **74**
[8] **30,3**	[253] 29 **154**	[610] 69 **152**	[961] 109 **150**	[1307] 148 **148**	[1652] 187 **145**	[1987] 224 **142**	[2298] 260 **138**	[2579] 291 **133**	[2810] 317 **127**	[3344] 378 **110**
[10] **37,9**	[217] 25 **193**	[569] 64 **191**	[923] 104 **189**	[1267] 143 **187**	[1611] 182 **184**	[1951] 220 **181**	[2274] 257 **177**	[2566] 290 **172**	[2784] 315 **165**	[3320] 375 **144**
[12] **45,4**	[184] 21 **231**	[539] 61 **229**	[892] 101 **227**	[1239] 140 **224**	[1586] 179 **221**	[1925] 217 **217**	[2239] 253 **214**	[2526] 285 **210**	[2750] 311 **202**	[3280] 371 **180**
[14] **53,0**	[128] 14 **270**	[485] 55 **268**	[838] 95 **265**	[1191] 135 **263**	[1536] 174 **259**	[1880] 212 **255**	[2193] 248 **252**	[2477] 280 **247**	[2701] 305 **240**	[3242] 366 **218**
Max. Continuous [15] **56,8**	[111] 13 **289**	[461] 52 **287**	[816] 92 **285**	[1167] 132 **281**	[1512] 171 **278**	[1851] 209 **274**	[2170] 245 **270**	[2455] 277 **265**	[2679] 303 **259**	[3227] 365 **237**
Max. Intermittent [20] **75,7**		[293] 33 **383**	[648] 73 **380**	[1000] 113 **377**	[1345] 152 **374**	[1688] 191 **370**	[2013] 227 **365**	[2289] 259 **343**	[2527] 286 **334**	

[461] 52 **287** } Torque [lb-in] Nm Speed RPM

Performance data is typical at 120 SUS. Actual data may vary slightly from unit to unit in production

Performance Data R Series

Motors run with high efficiency in all areas designated with a number for torque and speed, however for best motor life select a motor to run with a torque and speed range shown in the light blue area.

244 cm³/r [14.9 in³/r]

Δ Pressure Bar [PSI]

Flow LPM [GPM]	[200] 14	[400] 28	[600] 41	[800] 55	[1000] 69	[1200] 83	[1400] 97	[1600] 110	[1650] 114	Max. Continuous	Max. Intermittent [1900] 131
[2] **7,6**	[311] 35 **30**	[744] 84 **29**	[1183] 134 **28**	[1592] 180 **26**	[1981] 224 **24**	[2352] 266 **22**	[2691] 304 **18**	[2963] 335 **14**	[3039] 343 **11**		
[4] **15,1**	[361] 41 **61**	[801] 90 **59**	[1238] 140 **58**	[1669] 189 **56**	[2089] 236 **54**	[2491] 281 **52**	[2851] 322 **49**	[3205] 362 **44**	[3292] 372 **42**		[3697] 418 **34**
[6] **22,7**	[347] 39 **92**	[792] 89 **91**	[1235] 140 **89**	[1665] 188 **87**	[2098] 237 **85**	[2516] 284 **83**	[2892] 327 **80**	[3239] 366 **75**	[3320] 375 **73**		[3771] 426 **63**
[8] **30,3**	[317] 36 **123**	[762] 86 **121**	[1202] 136 **120**	[1634] 185 **118**	[2062] 233 **116**	[2476] 280 **114**	[2856] 323 **111**	[3226] 364 **105**	[3317] 375 **103**		[3779] 427 **90**
[10] **37,9**	[278] 31 **153**	[721] 81 **152**	[1166] 132 **150**	[1600] 181 **149**	[2029] 229 **146**	[2450] 277 **144**	[2808] 317 **141**	[3178] 359 **135**	[3275] 370 **133**		[3746] 423 **119**
[12] **45,4**	[229] 26 **185**	[673] 76 **183**	[1114] 126 **181**	[1554] 176 **179**	[1983] 224 **177**	[2399] 271 **174**	[2770] 313 **171**	[3130] 354 **165**	[3228] 365 **163**		[3699] 418 **148**
[14] **53,0**	[168] 19 **215**	[614] 69 **214**	[1059] 120 **211**	[1494] 169 **209**	[1927] 218 **207**	[2348] 265 **204**	[2728] 308 **201**	[3081] 348 **195**	[3171] 358 **194**		[3649] 412 **178**
[15] **56,8**	[132] 15 **231**	[581] 66 **229**	[1025] 116 **227**	[1463] 165 **224**	[1894] 214 **222**	[2315] 262 **219**	[2694] 304 **216**	[3043] 344 **211**	[3144] 355 **208**		[3621] 409 **193**
[20] **75,7**		[377] 43 **306**	[818] 92 **303**	[1255] 142 **301**	[1686] 190 **298**	[2104] 238 **295**	[2477] 280 **292**	[2838] 321 **284**	[2929] 331 **282**		

Max. Continuous

Max. Intermittent

306 cm³/r [18.7 in³/r]

Δ Pressure Bar [PSI]

Flow LPM [GPM]	[200] 14	[400] 28	[600] 41	[800] 55	[1000] 69	[1200] 83	[1300] 90	[1500] 103	Max. Continuous	Max. Intermittent [1800] 124
[2] **7,6**	[332] 38 **24**	[913] 103 **23**	[1484] 168 **22**	[2029] 229 **21**	[2532] 286 **20**	[2971] 336 **19**	[3199] 361 **18**	[3533] 399 **14**		
[4] **15,1**	[400] 45 **48**	[977] 110 **47**	[1543] 174 **47**	[2092] 236 **46**	[2599] 294 **45**	[3072] 347 **44**	[3311] 374 **43**	[3766] 425 **40**		[4329] 489 **30**
[6] **22,7**	[402] 45 **73**	[969] 109 **73**	[1533] 173 **72**	[2079] 235 **71**	[2581] 292 **71**	[3046] 344 **70**	[3290] 372 **69**	[3750] 424 **66**		[4390] 496 **58**
[8] **30,3**	[383] 43 **98**	[948] 107 **97**	[1502] 170 **96**	[2041] 231 **96**	[2537] 287 **96**	[3006] 340 **95**	[3249] 367 **94**	[3716] 420 **91**		[4361] 493 **82**
[10] **37,9**	[338] 38 **122**	[896] 101 **122**	[1449] 164 **121**	[1986] 224 **121**	[2471] 279 **120**	[2939] 332 **120**	[3183] 360 **119**	[3647] 412 **116**		[4296] 485 **106**
[12] **45,4**	[287] 32 **147**	[842] 95 **146**	[1391] 157 **146**	[1917] 217 **146**	[2382] 270 **145**	[2868] 324 **145**	[3112] 352 **144**	[3580] 404 **140**		[4221] 477 **129**
[14] **53,0**	[217] 25 **172**	[773] 87 **171**	[1324] 150 **170**	[1846] 209 **169**	[2312] 261 **170**	[2785] 315 **169**	[3028] 342 **169**	[3498] 395 **165**		[4152] 469 **152**
[15] **56,8**	[169] 19 **183**	[729] 82 **183**	[1280] 145 **182**	[1816] 205 **182**	[2271] 257 **181**	[2746] 310 **177**	[2988] 338 **171**	[3460] 391 **151**		[4116] 465 **164**
[20] **75,7**		[469] 53 **244**	[1020] 115 **243**	[1549] 175 **243**	[2013] 227 **243**	[2467] 279 **242**	[2710] 306 **241**	[3185] 360 **237**		

Max. Continuous

Max. Intermittent

[729] 82 **183** } Torque [lb-in] Nm Speed RPM

370 cm³/r [22.6 in³/r]

Δ Pressure Bar [PSI]

Flow LPM [GPM]	[200] 14	[400] 28	[600] 41	[800] 55	[1000] 69	[1200] 83	[1300] 90	Max. Continuous	Max. Intermittent [1500] 103
[2] **7,6**	[476] 54 **19**	[1166] 132 **19**	[1835] 207 **18**	[2464] 278 **17**	[3043] 344 **16**				
[4] **15,1**	[552] 62 **40**	[1226] 139 **39**	[1895] 214 **39**	[2540] 287 **38**	[3124] 353 **37**	[3639] 411 **35**	[3892] 440 **33**		[4386] 496 **29**
[6] **22,7**	[544] 61 **60**	[1218] 138 **60**	[1879] 212 **59**	[2531] 286 **59**	[3108] 351 **58**	[3628] 410 **56**	[3886] 439 **54**		[4406] 498 **49**
[8] **30,3**	[504] 57 **81**	[1177] 133 **80**	[1836] 207 **80**	[2484] 281 **79**	[3066] 346 **79**	[3578] 404 **77**	[3853] 435 **75**		[4380] 495 **69**
[10] **37,9**	[442] 50 **101**	[1114] 126 **101**	[1772] 200 **100**	[2414] 273 **99**	[2986] 337 **99**	[3503] 396 **97**	[3782] 427 **94**		[4317] 488 **89**
[12] **45,4**	[359] 41 **122**	[1031] 116 **121**	[1690] 191 **121**	[2330] 263 **120**	[2916] 329 **119**	[3423] 387 **117**	[3690] 417 **115**		[4226] 477 **108**
[14] **53,0**	[273] 31 **142**	[946] 107 **141**	[1605] 181 **140**	[2240] 253 **140**	[2830] 320 **139**	[3328] 376 **137**	[3600] 407 **135**		[4134] 467 **128**
[15] **56,8**	[223] 25 **152**	[893] 101 **151**	[1554] 176 **150**	[2188] 247 **150**	[2777] 314 **150**	[3272] 370 **148**	[3550] 401 **145**		[4085] 462 **138**
[20] **75,7**		[569] 64 **202**	[1231] 139 **201**	[1861] 210 **200**	[2458] 278 **200**	[2968] 335 **197**	[3238] 366 **195**		

Max. Continuous

Max. Intermittent

Performance data is typical at 120 SUS. Actual data may vary slightly from unit to unit in production

Dimensions R Series

2 Bolt Flange

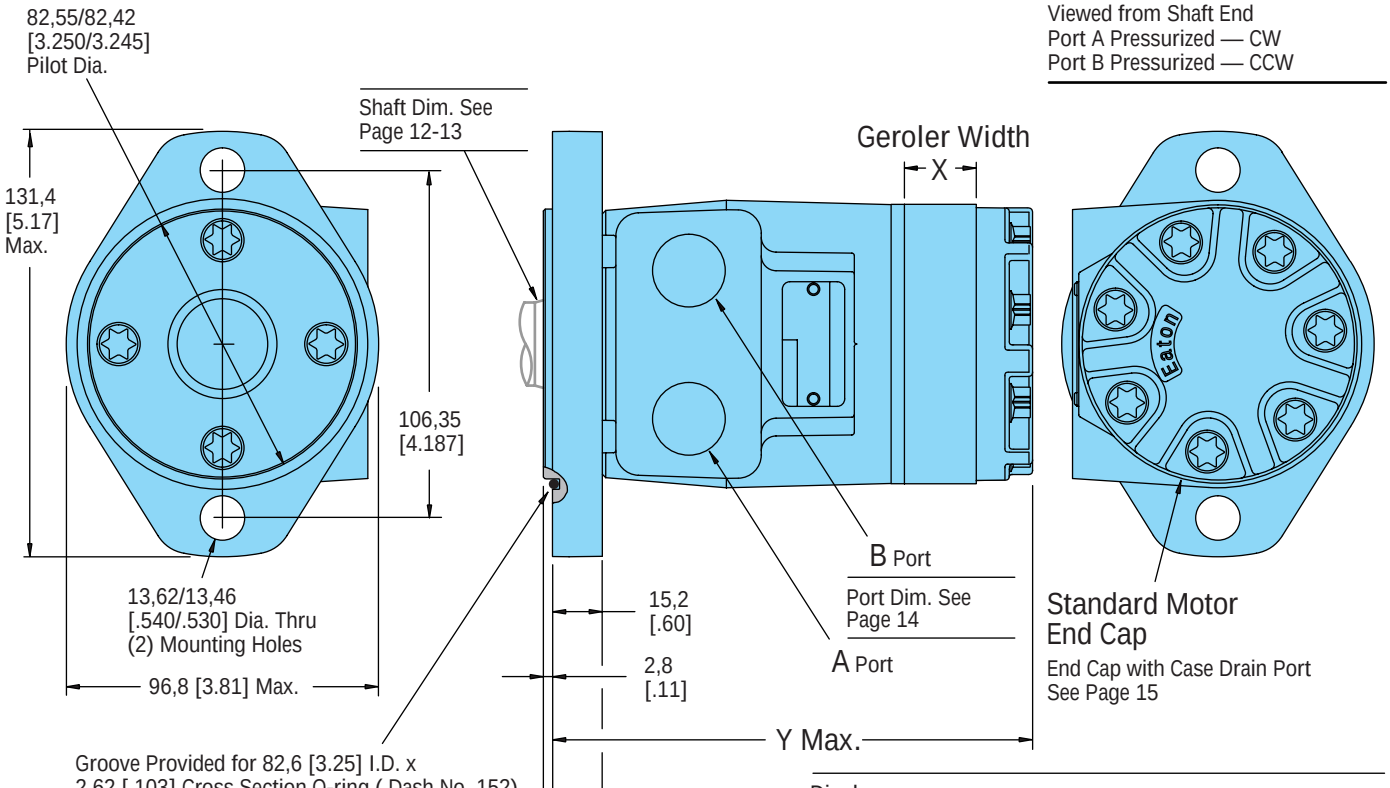

Standard Rotation
Viewed from Shaft End
Port A Pressurized — CW
Port B Pressurized — CCW

Standard Motor End Cap

End Cap with Case Drain Port
See Page 15

4 Bolt Flange

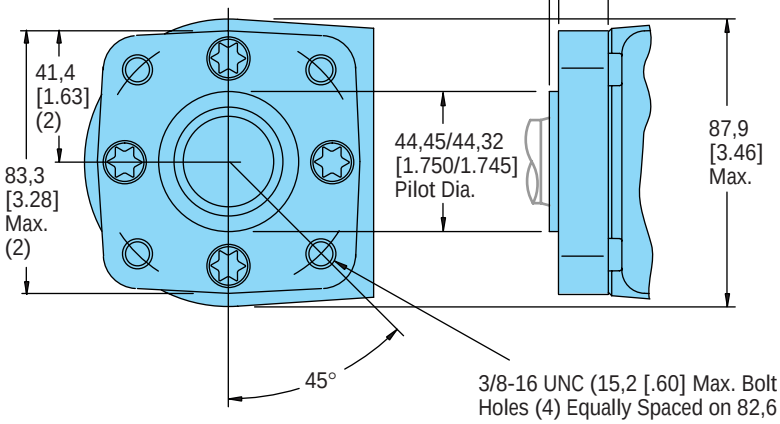

3/8-16 UNC (15,2 [.60] Max. Bolt Thread Engagement) Mounting Holes (4) Equally Spaced on 82,6 [3.25] Dia. Bolt Circle
or
M10 x 1,5 (15,2 [.60] Max. Bolt Thread Engagement) Mounting Holes (4) Equally Spaced on 82,6 [3.25] Dia. Bolt Circle

Displ. cm^3/r [in^3/r]	X	Y Max.
	Width mm [in.]	Length mm [in.]
36 [2.2]	6,6 [.26]	132,2 [5.21]
49 [3.0]	9,1 [.36]	134,6 [5.30]
66 [4.0]	12,2 [.48]	137,7 [5.42]
80 [4.9]	14,7 [.58]	140,3 [5.53]
102 [6.2]	18,5 [.73]	144,3 [5.68]
131 [8.0]	24,1 [.95]	149,6 [5.89]
157 [9.6]	29,0 [1.14]	154,5 [6.09]
195 [11.9]	35,6 [1.40]	161,3 [6.35]
244 [14.9]	44,7 [1.76]	170,3 [6.71]
306 [18.7]	56,1 [2.21]	181,6 [7.16]
370 [22.6]	72,1 [2.84]	197,9 [7.79]

Product Numbers
R Series 146-xxxx

Product Numbers—R Series

Add three digit prefix —146-to four digit number from chart for complete product number—Example 146-1204.
Orders will not be accepted without three digit prefix.

Mounting	Shaft	Ports	Displ. cm³/r [in³/r] Product Number 146-xxxx										
			36 [2.2]	49 [3.0]	66 [4.0]	80 [4.9]	102 [6.2]	131 [8.0]	157 [9.6]	195 [11.9]	244 [14.9]	306 [18.7]	370 [22.6]
2 Bolt Flange	1 in. Straight w/Woodruff Key	7/8-14 O-ring	146-1041	-1042	-1043	-1044	-1045	-1046	-1047	-1048	-1049	-1050	—
		1/2 NPTF	146-1031	-1032	-1033	-1034	-1035	-1036	-1037	-1038	-1039	-1040	—
		Manifold*	146-1051	-1052	-1053	-1054	-1055	-1056	-1057	-1058	-1059	-1060	—
	1 in. SAE 6B Splined	7/8-14 O-ring	146-1101	-1102	-1103	-1104	-1105	-1106	-1107	-1108	-1109	-1110	—
		1/2 NPTF	146-1091	-1092	-1093	-1094	-1095	-1096	-1097	-1098	-1099	-1100	—
		Manifold*	146-1111	-1112	-1113	-1114	-1115	-1116	-1117	-1118	-1119	-1120	—
	1 in. Straight w/ .31 Dia. Crosshole	7/8-14 O-ring	146-1121	-1122	-1123	-1124	-1125	-1126	-1127	—	—	—	—
		1/2 NPTF	146-1128	-1129	-1130	-1131	-1132	-1133	-1134	—	—	—	—
		Manifold*	146-1135	-1136	-1137	-1138	-1139	-1140	-1141	—	—	—	—
	1 in. Straight w/ .40 Dia. Crosshole	7/8-14 O-ring	146-1142	-1143	-1144	-1145	-1146	-1147	-1148	—	—	—	—
		1/2 NPTF	146-1149	-1150	-1151	-1152	-1153	-1154	-1155	—	—	—	—
		Manifold*	146-1156	-1157	-1158	-1159	-1160	-1161	-1162	—	—	—	—
4 Bolt Flange	1 in. Straight w/Woodruff Key	7/8-14 O-ring	146-1011	-1012	-1013	-1014	-1015	-1016	-1017	-1018	-1019	-1020	—
		1/2 NPTF	146-1001	-1002	-1003	-1004	-1005	-1006	-1007	-1008	-1009	-1010	—
		Manifold*	146-1021	-1022	-1023	-1024	-1025	-1026	-1027	-1028	-1029	-1030	—
	1 in. SAE 6B Splined	7/8-14 O-ring	146-1071	-1072	-1073	-1074	-1075	-1076	-1077	-1078	-1079	-1080	—
		1/2 NPTF	146-1061	-1062	-1063	-1064	-1065	-1066	-1067	-1068	-1069	-1070	—
		Manifold*	146-1081	-1082	-1083	-1084	-1085	-1086	-1087	-1088	-1089	-1090	—
	1 in. Straight w/ .31 Dia. Crosshole	7/8-14 O-ring	146-1163	-1164	-1165	-1166	-1167	-1168	-1169	—	—	—	—
		1/2 NPTF	146-1170	-1171	-1172	-1173	-1174	-1175	-1176	—	—	—	—
		Manifold*	146-1177	-1178	-1179	-1180	-1181	-1182	-1183	—	—	—	—
	1 in. Straight w/ .40 Dia. Crosshole	7/8-14 O-ring	146-1184	-1185	-1186	-1187	-1188	-1189	-1190	—	—	—	—
		1/2 NPTF	146-1191	-1192	-1193	-1194	-1195	-1196	-1197	—	—	—	—
		Manifold*	146-1198	-1199	-1200	-1201	-1202	-1203	-1204	—	—	—	—

*Manifold product numbers shown are 5/16-18 port face mounting threads (for M8 x 1,5 port face mounting threads see note below).

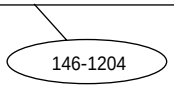

For R Series motors with a configuration *Not Shown* in the chart above: Use the model code number system on page 19 to specify the product in detail.

Shaft Side Load Capacity
R Series

The hydrodynamic bearing has infinite life when shaft load ratings are not exceeded. Hence, the shaft side load capacity is more than adequate to handle most externally applied loads (such as belts, chains, etc.), providing the motor to shaft size is applied within its torque rating.

Allowable side load chart, shaft load location drawing and load curves (below) are based on the side / radial loads being applied to shaft at locations A, B, and C, to determine the shaft side load capacity at locations other than those shown use the formula (shown below). For more information about shaft side loads on Char-Lynn motors contact your Eaton representative.

$$\text{Sideload P kg} = \frac{900}{N}\left(\frac{16800}{L + 96{,}3}\right) \quad \text{for 200-900 RPM}$$

$$\text{Sideload P [lb]} = \frac{900}{N}\left(\frac{1460}{L + [3.79]}\right) \quad \text{for 200-900 RPM}$$

Where N = Shaft Speed (RPM)
L = Distance from Mounting Surface

RPM	Allowable Shaft Side Load —Kg [lb]		
	A	B	C
900	154 [339]	136 [300]	118 [261]
625	205 [452]	181 [400]	158 [348]
500	256 [565]	227 [500]	197 [435]
400	307 [678]	272 [600]	237 [522]
300	410 [904]	363 [800]	316 [696]
200	718 [1582]	635 [1400]	552 [1216]

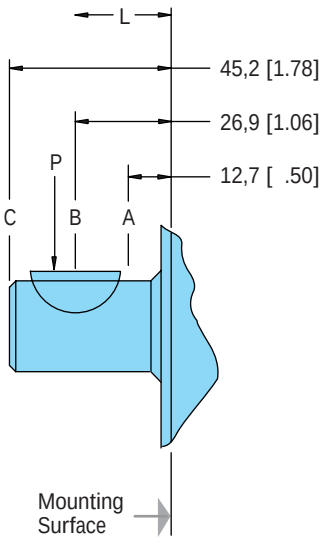

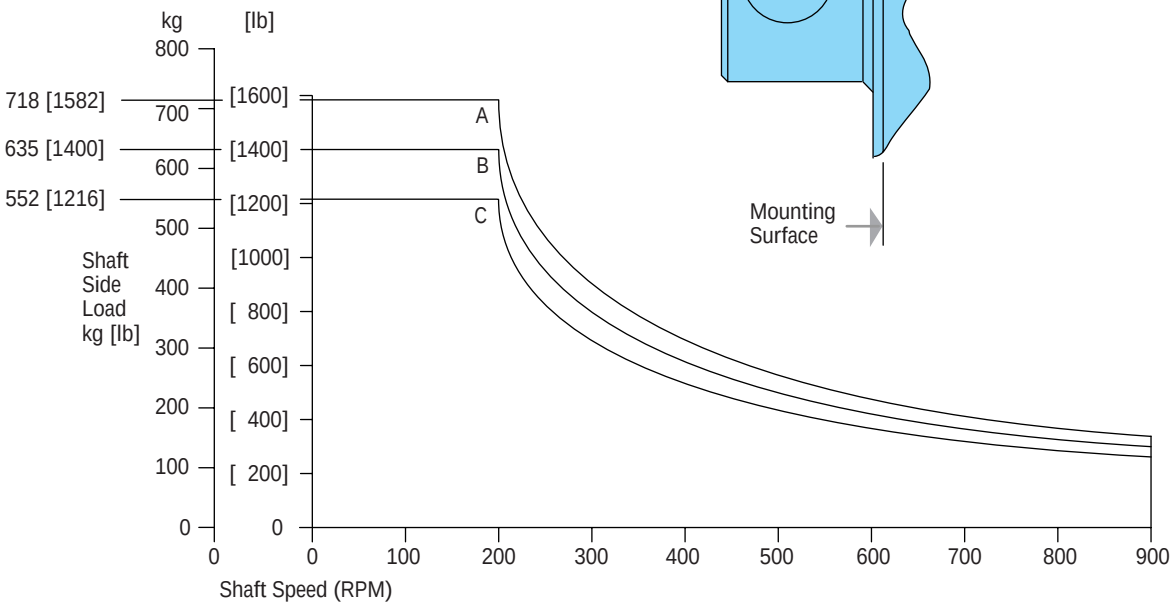

Dimensions — Shafts
R Series

Shaft Size /Motor Torque Combination Limit Guide

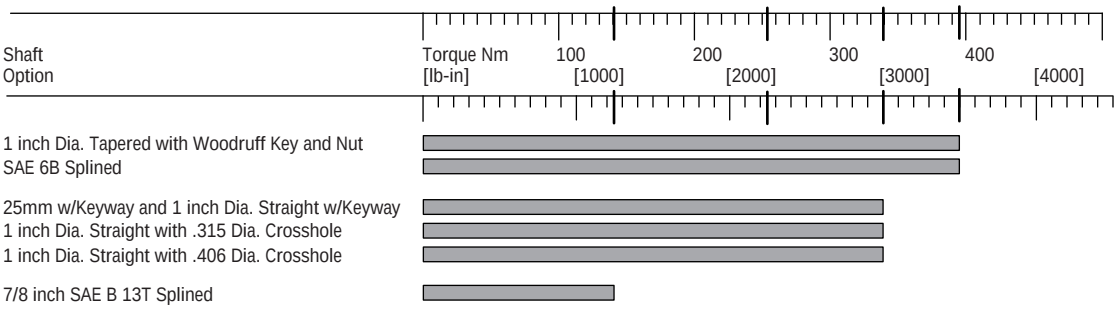

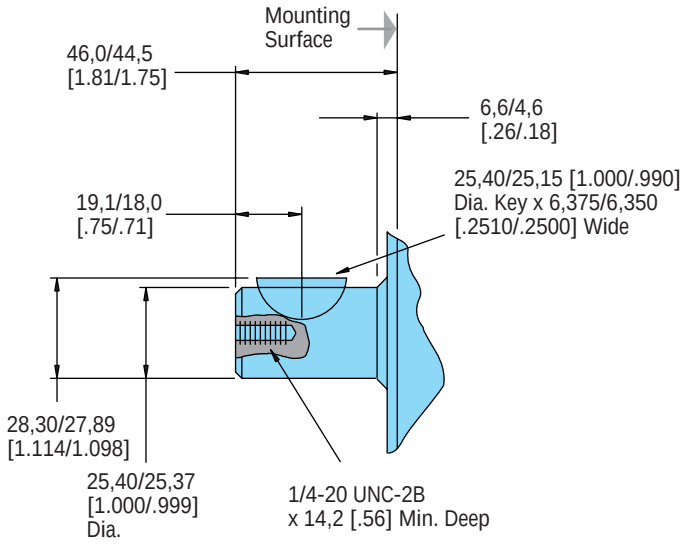

1 in. Dia. Straight with Woodruff Key

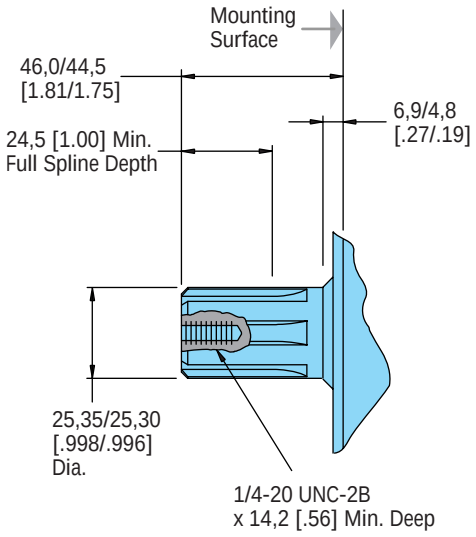

SAE 6B Splined Shaft

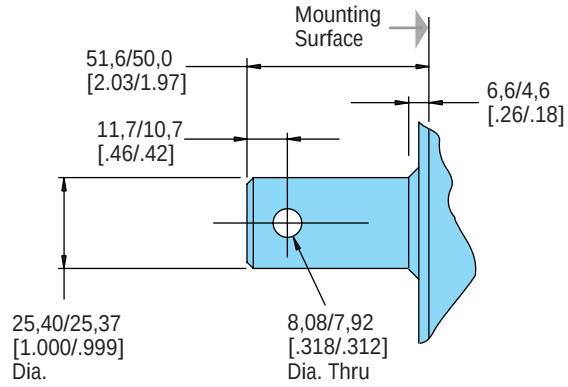

1 in. Dia. Straight Shaft with .315 Dia. Crosshole

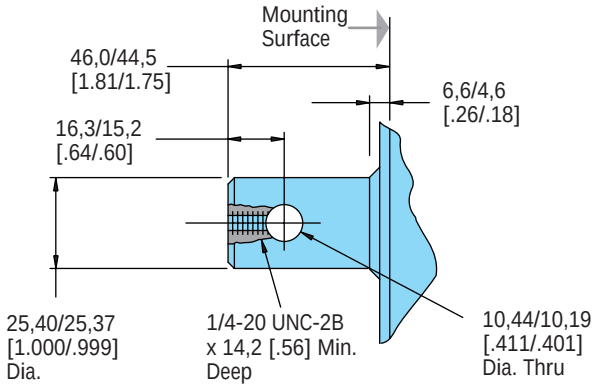

1 in. Dia. Straight Shaft with .406 Dia. Crosshole

Dimensions — Shafts
R Series

Reduced Length
Tapered Shaft Option

1 in. Dia. Tapered
(Reduced Length)
with Woodruff Key and Nut

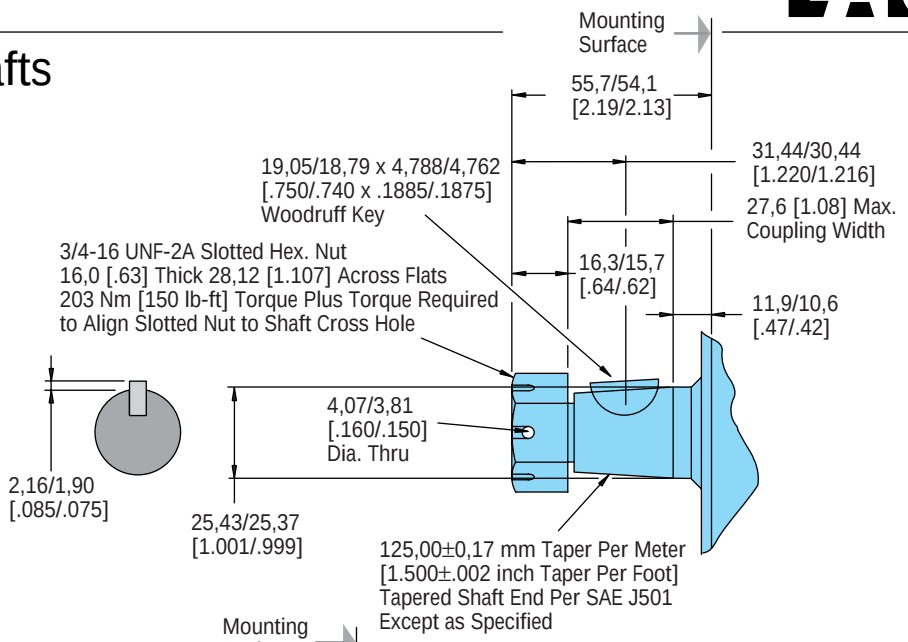

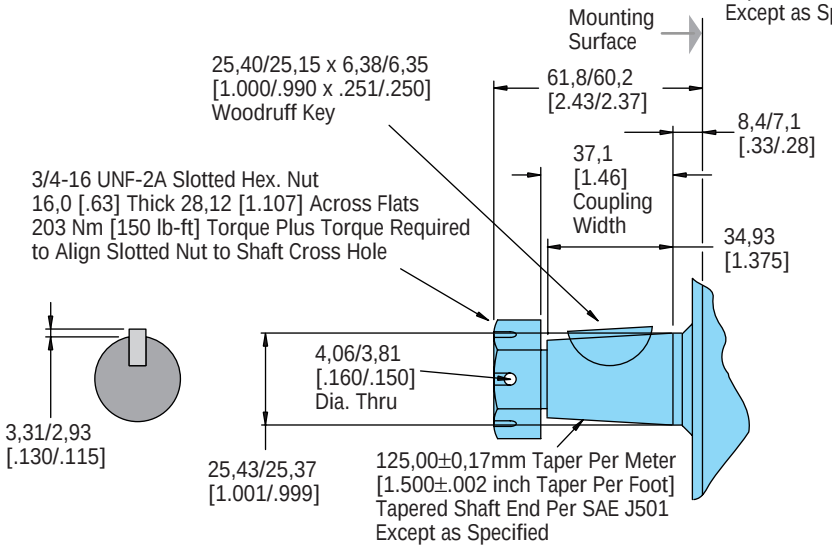

1 in. Dia. Tapered Shaft
with Woodruff Key and Nut

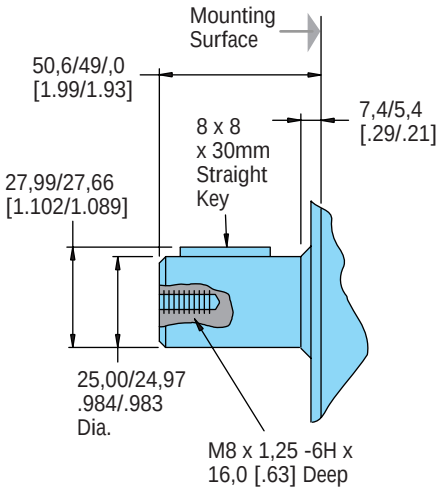

25mm Dia. Straight Shaft
with 8mm Keyway

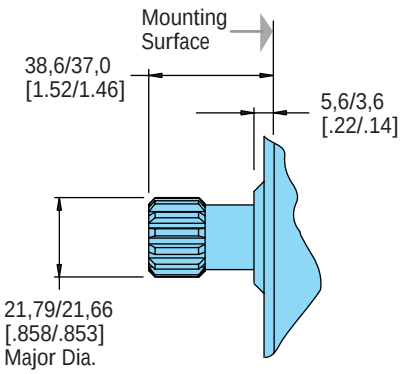

7/8 in. Dia. SAE B Shaft
13 T Splined

Dimensions Ports
R Series

2 Bolt Flange

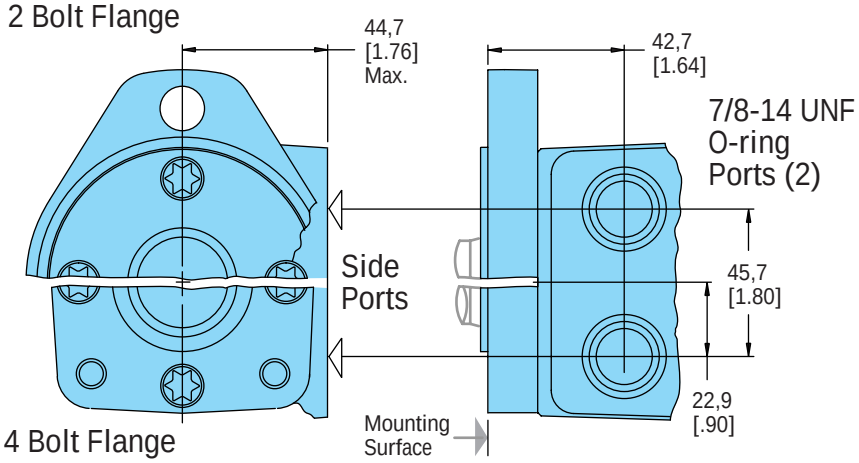

4 Bolt Flange

Use of Teflon Tape Sealant/Lubricant (with 1/2 14 NPTF Port Connectors only).
When using fittings with Teflon tape, be careful when taping and tightening. Over tightening or

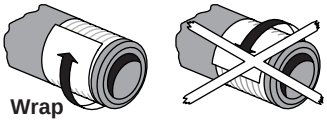

improperly taped fittings can cause damage to housing or leakage.
Use the following procedures:

- Wrap approx. 1 1/2 Turns of 13 mm [1/2 in.] wide Teflon Tape around fitting threads — start tape 2 threads up from end of fitting.
- Tighten threads to a Maximum of 34 Nm [25 lb-ft]. — Do Not Tighten Further —
- If fittings leak when tightened to maximum torque, either retape, reseal, or replace fittings.

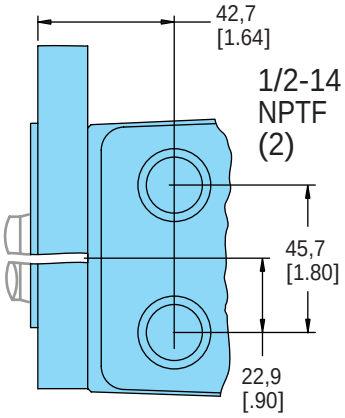

Manifold Ports

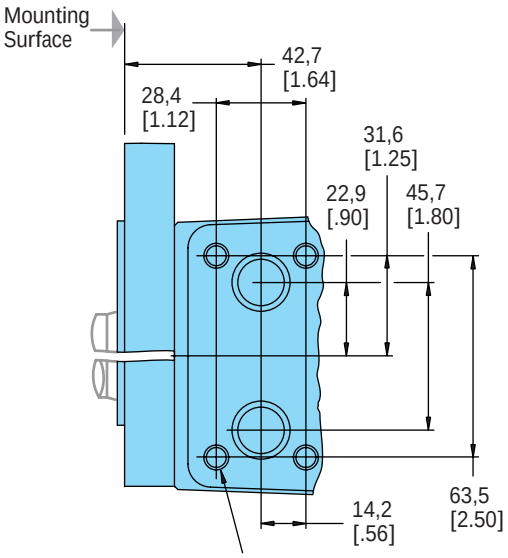

5/16-18 UNC (12,7 [.50] Max. Screw Thread Engagement) (4)
or
M8 x 1,5 (12,7 [.50] Max. Screw Thread Engagement) (4)

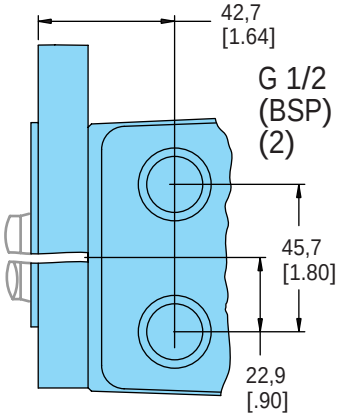

Case Pressure and Case Drain — R Series

Parallel or Series Connection

Hydraulic lines bringing pressurized fluid from the pump to the motor and return flow from the motor back to tank can be flexible or ridged. One power source and one pump can be sized to supply one motor or many motors. Furthermore, one pump and multiple motors can be connected in series or in parallel (see each type of connection shown below). When connecting the pump to the motors in series excess internal case pressure is created in the motor, this excess pressure in each motor must be ported back to tank. However, when making a parallel connection from the pump to the motors no excess case pressure will be added. Hence, using the case drain ports are not necessary. Meanwhile, take a look at the application and see if this optional case drain port can be connected to your advantage, wether it be a single motor to pump connection, multiple motors connected to pump in parallel, as well as multiple motors connected to pump in series...

…Case Drain Advantage — In addition to providing lower case pressures for motors connected in series, there are advantages for adding an external case drain line to motors with normal case pressures as well. These advantages are: Contamination Control — flushing the motor case. Cooler Systems — exiting oil draws motor heat away. Extend Motor Seal Life — maintain low case pressure with a preset restriction installed in the case drain line.

Motors ordered with case drain port will be shipped with steel hex socket plug installed in that end cap drain port.

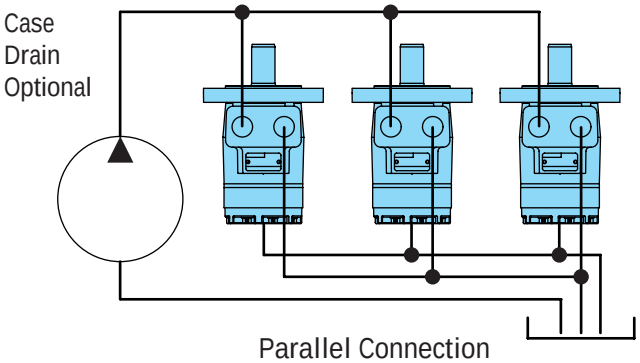

Parallel Connection

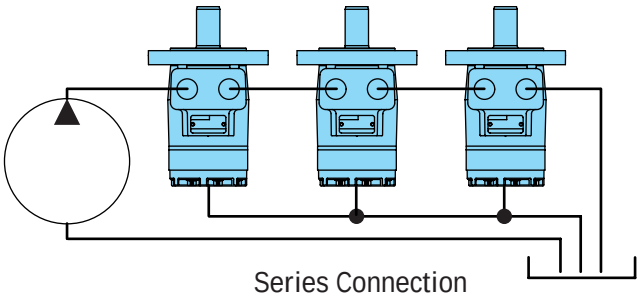

Series Connection

R Series with Case Drain Port — G 1/4 (BSP) or 7/16-20 O-ring

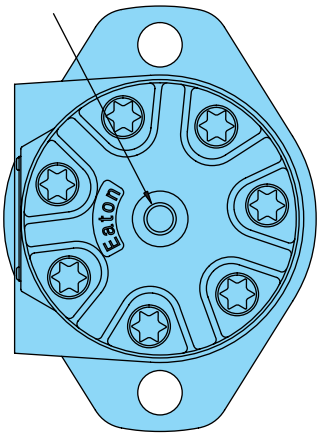

Case Pressure and Case Drain — R Series

Char-Lynn R Series motors are durable and have long life as long as the recommended case pressure is not exceeded. Allowable case pressure is highest at low shaft speeds. Consequently, motor life will be shortened if case pressure exceeds these ratings (acceptability may vary with application). Finally, determine if an external case drain is required (see case pressure seal limition chart below — chart based on case pressure and shaft speed). In conclusion, if a case drain line is needed, connect drain line to assure that the motor will always remain full of fluid. However, a pressure restriction should be added to the case drain line, during which a motor case pressure of 3,5 Bar [50 PSI] is maintained.

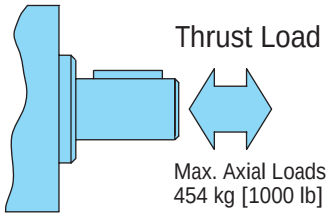

$Pc \approx .6\Delta P + P_2$

Pc = Case Pressure
P_1 = Inlet Line Pressure
P_2 = Back Pressure
$\Delta P = P_1 - P_2$

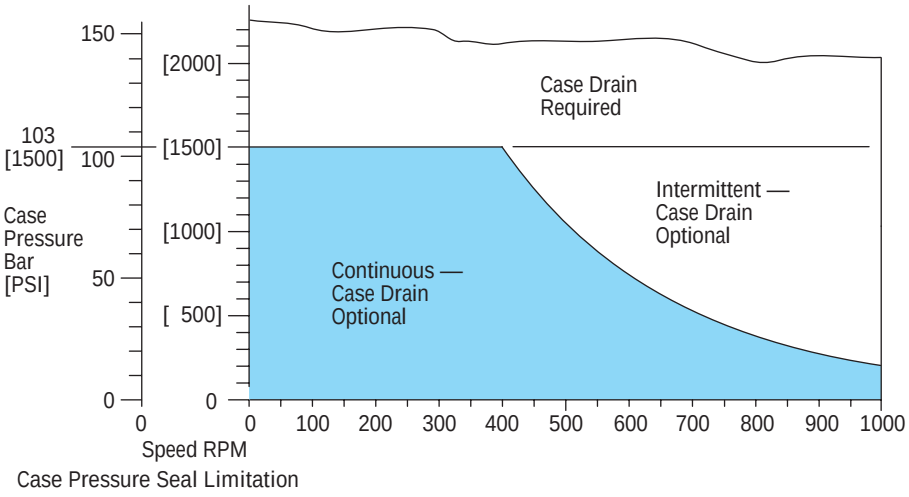

Case Pressure Seal Limitation

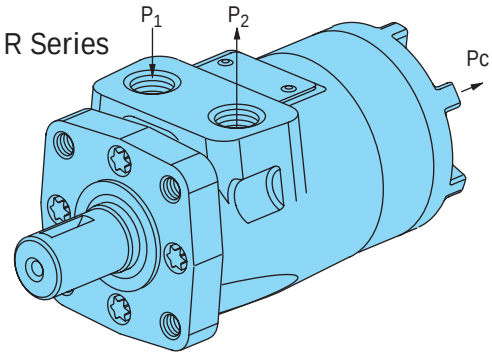

Speed Sensor R Series

Eaton has developed a speed sensor specifically designed for LSHT motors. The design is rugged and fully protected against accidental reverse polarity or short circuit hook up. A built in pull up resistor simplifies installation with control systems.

This sensor is fully compatible with mobile vehicle electrical systems and gives a reliable digital on/off signal over a wide speed range and temperature range.

Connection — standard 3 prong Weatherpack connector with 18 AWG (american wire gage) cables:
Position A (red) = power supply Position B (white) = signal output Position C (black) = common

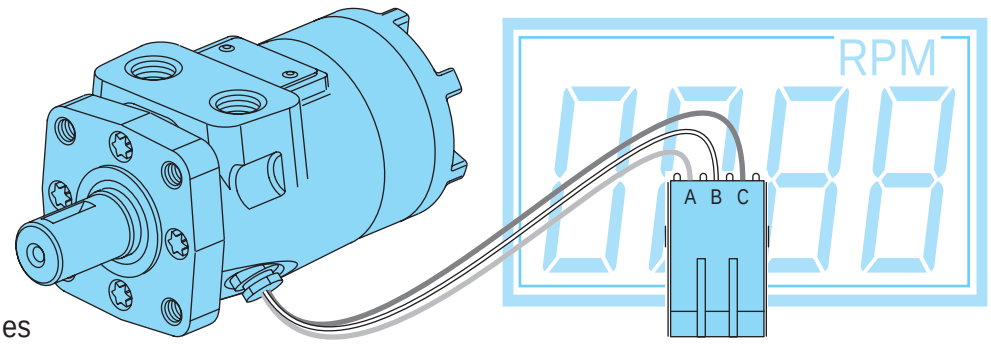

R Series

Dimensions — Mounting Options R Series

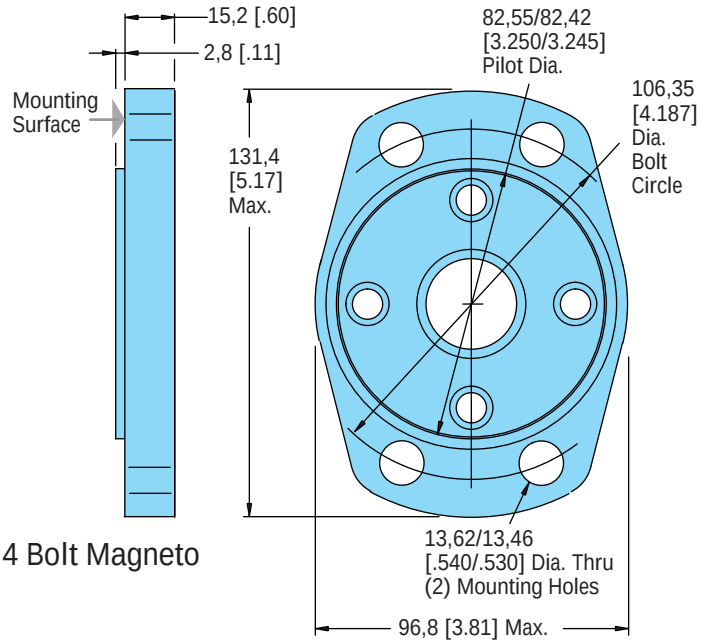

4 Bolt Magneto

Base Block Mounting Kits

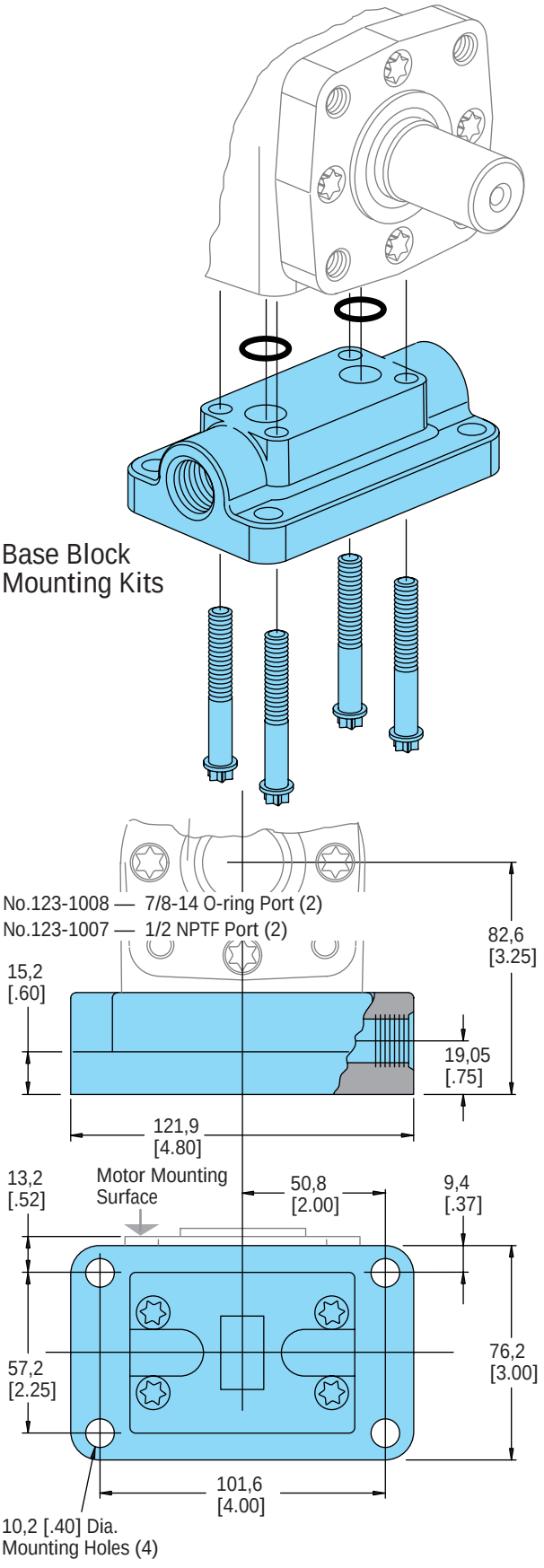

Fluid Recommendations
R Series

Introduction

The ability of Eaton hydraulic components to provide the desired performance and life expectancy depends largely on the fluid used. The purpose of this section is to provide readers with the knowledge required to select the appropriate fluids for use in systems that employ Eaton hydraulic components.

One of the most important characteristics to consider when choosing a fluid to be used in a hydraulic system is viscosity. Viscosity choice is always a compromise; the fluid must be thin enough to flow easily but thick enough to seal and maintain a lubricating film between bearing and sealing surfaces. Viscosity requirements, see chart below.

Viscosity and Temperature

Fluid temperature affects viscosity. In general, as the fluid warms it gets thinner and its viscosity decreases. The opposite is true when fluid cools. When choosing a fluid, it is important to consider the start-up and operating temperatures of the hydraulic system. Generally, the fluid is thick when the hydraulic system is started. With movement, the fluid warms to a point where a cooling system begins to operate.

From then on, the fluid is maintained at the temperature for which the hydraulic system was designed. In actual applications this sequence varies; hydraulic systems are used in many environments from very cold to very hot. Cooling systems also vary from very elaborate to very simple, so ambient temperature may affect operating temperature. Equipment manufacturers who use Eaton hydraulic components in their products should anticipate temperature in their designs and make the appropriate fluid recommendations to their customers.

Cleanliness

Cleanliness of the fluid in a hydraulic system is extremely important. Eaton recommends that the fluid used in its hydraulic components be maintained at ISO Cleanliness Code 18/13 per SAE J1165. This code allows a maximum of 2500 particles per milliliter greater than 5 µm and a maximum of 80 particles per milliliter greater than 15 µm. Cleanliness requirements for specific products are given in the table below.

OEM's and distributors who use Eaton hydraulic components in their products should provide for these requirements in their designs. A reputable filter supplier can supply filter information.

Fluid Maintenance

Maintaining correct fluid viscosity and cleanliness level is essential for all hydraulic systems. Since Eaton hydraulic components are used in a wide variety of applications it is impossible for Eaton to publish a fluid maintenance schedule that would cover every situation. Field testing and monitoring are the only ways to get accurate measurements of system cleanliness. OEM's and distributors who use Eaton hydraulic components should test and establish fluid maintenance schedules for their products. These maintenance schedules should be designed to meet the viscosity and cleanliness requirements laid out in this document.

Fluid Selection

Premium grade petroleum based hydraulic fluids will provide the best performance in Eaton hydraulic components. These fluids typically contain additives that are beneficial to hydraulic systems. Eaton recommends fluids that contain anti-wear agents, rust inhibitors, anti-foaming agents, and oxidation inhibitors. Premium grade petroleum based hydraulic fluids carry an ISO VG rating.

SAE grade crankcase oils may be used in systems that employ Eaton hydraulic components, but it should be noted that these oils may not contain all of the recommended additives. This means using crankcase oils may increase fluid maintenance requirements.

Hydraulic fluids that contain V.I. (viscosity index) improvers, sometimes called multi-viscosity oils, may be used in systems that employ Eaton hydraulic components. These V.I. improved fluids are known to "shear-down" with use. This means that their actual viscosity drops below the rated value. Fluid maintenance must be increased if V.I. improved fluids are used. Automotive automatic transmission fluids contain V.I. improvers.

Synthetic fluids may be used in Eaton hydraulic components. A reputable fluid supplier can provide information on synthetic fluids. Review applications that require the use of synthetic fluids with your Eaton representative.

Product Line	Viscosity		ISO Cleanliness Requirements
	Minimum	Best Range	
R Series	70 SUS 13 cSt	100-200 SUS 20-43 cSt	18/13

Additional Notes:

- Fluids too thick to flow in cold weather start-ups will cause pump cavitation and possible damage. Motor cavitation is not a problem during cold start-ups.
- When choosing a hydraulic fluid, all the components in the system must be considered and the best viscosity range adjusted accordingly. For example, when a medium duty piston pump is combined with a Geroler motor the best viscosity range becomes 100 - 150 SUS [20 - 32 cSt] and viscosity should never fall below 70 SUS [13 cSt].
- If the natural color of the fluid has become black it is possible that an overheating problem exists.
- If the fluid becomes milky a water contamination problem may exist.
- Take fluid level reading when the system is cold.
- Contact your Eaton representative if you have specific questions about the fluid requirements of Eaton hydraulic components.

Model Code for R Series Motors

The following 16-digit coding system has been developed to identify all of the configuration options for the R Series Motor. Use this model code to specify a motor with the desired features. All 16-digits of the code must be present when ordering. You may want to photocopy the matrix below to ensure that each number is entered in the correct box.

Model Code — R Series Spool Valve Motors

1	2	3	4	5	6	7	8	9	10	11	12	13	14	15	16
M	R	0												0	0

Position 1 Product Series
M ..... Motor
Position 2, 3 R Series
R0 ..... R Series
Position 4, 5 Displacement cm^3/r [in^3/r]
02 ..... 36 [2.2]
03 ..... 49 [3.0]
04 ..... 66 [4.0]
05 ..... 80 [4.9]
06 ..... 102 [6.2]
08 ..... 131 [8.0]
10 ..... 157 [9.6]
12 ..... 195 [11.9]
15 ..... 244 [14.9]
19 ..... 306 [18.7]
05 ..... 370 [22.6]
Position 6 Mounting Flange
A ..... 2 Bolt (Standard) 82,6 [3.25] Pilot Dia. and 13,59 [.535] Dia. Mounting Holes 106,2 [4.18] Dia. B.C.
B ..... 4 Bolt (Standard) 44,4 [1.75] Pilot Dia. and 3/8-16 Mouning Holes 82,6 [3.25] Dia. B.C.
E ..... 4 Bolt (Standard) 44,4 [1.75] Pilot Dia. and M10 x 1,5 Mounting Holes 82,6 [3.25] Dia. B.C.
K ..... 4 Bolt Magneto 82,6 [3.25] Pilot Dia. and 13,59 [.535] Dia. Mounting Holes 106,2 [4.18] Dia. B.C.
Position 7, 8 Output Shaft
01 ..... 1 inch Dia. Straight with Woodruff Key and 1/4-20 Threaded hole
02 ..... 1 inch Dia. SAE 6B Splined with 1/4-20 Threaded Hole
07 ..... 1 inch Dia. Straight with 7,9 [.31] Dia. Crosshole 11,2 [.44] from End
08 ..... 1 inch Dia. Straight with 10,2 [.40] Dia. Crosshole 15,7 [.62] from End and 1/4-20 Threaded Hole
16 ..... 7/8 inch Dia. SAE B 13T Splined
18 ..... 1 inch Dia. Tapered with Woodruff Key and Nut
24 ..... 25mm Dia. Straight with 8mm Key adn 8mm x 1,2 Threaded Hole
32 ..... 1 inch Dia. Straight with 10,2 [.40] Dia. Crosshole 15,7 [.62] from End and 1/4-20 Threaded Hole (Plated for Corrosion Protection)
37 ..... 1 inch Dia. Tapered with Woodruff Key and Nut, 9,52 [.375] Reduced Length
Position 9 Port Type
A ..... 7/8-14 O-ring
B ..... 1/2-14 NPTF
C ..... Manifold (5/16-18 Mounting Threads)
D ..... Manifold (M8 x 1,5 Mounting Threads)
E ..... G 1/2 (BSP)
Position 10 Case Drain
0 ..... No Case Drain
1 ..... 7/16-20 O-ring Port End Cap
2 ..... G 1/4 (BSP) Port End Cap
Position 11, 12 Special Features (Hardware)
00 ..... None
AC ..... Viton Shaft Seal
AB ..... Low Speed Valve
BZ ..... Speed Sensor
Position 13 Special Features (Assembly)
0 ..... None
1 ..... Reverse Rotation
2 ..... Flange Rotated 90°
Position 14 Paint/Special Packaging
0 ..... No Paint
A ..... Painted Low Gloss Black (Standard
D ..... Corrosion Protected
Position 15 Eaton Assigned Code when Applicable
0 ..... Assigned Code
Position 16 Eaton Assigned Design Code
0 ..... Design Code

Eaton Corporation is a global manufacturer of highly engineered products that serve industrial, vehicle, construction, commercial and semiconductor markets. Principal products include electrical power distribution and control equipment, truck drivetrain systems, engine components, hydraulic products, ion implanters and a wide variety of controls. Headquartered in Cleveland, the company has 49,000 employees and 143 manufacturing sites in 26 countries around the world. Sales for 1997 were $7.6 billion.

Information contained in this catalog is accurate as of the publication date and is subject to change without notice. Performance values are typical values. Customers are responsible for selecting products for their applications using normal engineering methods.

Eaton Corporation
Hydraulics Division
15151 Highway 5
Eden Prairie, MN 55344

Eaton Ltd.
Hydraulics Division
Glenrothes, Fife
Scotland, KY7 4NW
Telephone +44 (0) 1592-771-771
Fax: +44 (0) 1592-773-184

Eaton GmbH
Hydraulics Division
Am Schimmersfeld 7
40880 Ratingen, Germany
Telephone: +49 (0) 2102-406-830
Fax: +49 (0) 2102-406-800

DNV
ACCREDITED BY THE DUTCH COUNCIL FOR CERTIFICATION Reg. No. 24
ISO-9001 CERTIFICATED FIRM
DET NORSKE VERITAS INDUSTRY BV, THE NETHERLANDS

Quality System Certified
Products in this catalog are manufactured in an ISO-9001-certified site.

www.eatonhydraulics.com

Form No. 11-103

Copyright Eaton Corporation, 1991, 1993, 1994, 1995, 1996 and 1997
All Rights Reserved
Printed in USA